JVC

SERVICE MANUAL

D-ILA PROJECTION TELEVISION

HD-56FH97, HD-56FN97, HD-61FH97, HD-61FN97

BASIC CHASSIS
RA2

TABLE OF CONTENTS

1 PRECAUTION 1-3
2 SPECIFIC SERVICE INSTRUCTIONS 1-7
3 DISASSEMBLY 1-10
4 ADJUSTMENT 1-24
5 TROUBLESHOOTING 1-32

COPYRIGHT © 2006 Victor Company of Japan, Limited

No.YA409
2006/9

SPECIFICATION

Items		Contents			
		HD-56FH97	HD-56FN97	HD-61FH97	HD-61FN97
Dimensions (W × H × D)		129.2 cm × 94.4 cm × 45.0 cm (50-7/8" × 37-1/8" × 17-3/4")		140.3 cm × 101.6 cm × 48.4 cm (55-1/4" × 40" × 19")	
Mass		41 kg (91 lbs)		45 kg (99 lbs)	
TV RF System (Analog / Digital)	Analog Digital	CCIR (M) ATSC terrestrial / Digital cable			
Color System (Analog)		NTSC			
Stereo System (Analog)		BTSC (Multi Channel Sound)			
Teletext System (Analog)		Closed caption (T1-T4 / CC1-CC4)			
TV Receiving Channels and Frequency (Analog)	VHF Low VHF High UHF CATV	02ch - 06ch : 54MHz - 88MHz 07ch - 13ch : 174MHz - 216MHz 14ch - 69ch : 470MHz - 806MHz 54MHz - 804MHz Low Band : 02 - 06 High Band : 07 - 13 Mid Band : 14 - 22 Super Band : 23 - 36 Hyper Band : 37 - 64 Ultra Band : 65 - 94, 100 - 135 Sub Mid Band : 01, 96 - 99			
TV / CATV Total Channel		191 Channels			
Intermediate Frequency (Analog)	Video IF Sound IF	45.75 MHz 41.25 MHz (4.5MHz)			
Color Sub Carrier Frequency (Analog)		3.58 MHz			
Power Input		AC120V, 60Hz			
Power Consumption		215W			
Projection Source		110W High-pressure mercury lamp			
Projection Device		D-ILA device (Reflection active matrix type LCD) x 3(R / G /B)			
Resolution		Total=H:1952 × V:1088 [Effective =H:1920 × V:1080]			
Screen		Transparent screen (unitized fresnel lens / lenticular lens), aspect ratio 16:9			
Screen Size		56" (142cm) Measured diagonally H:124 cm × V:69.8cm		61" (155cm) Measured diagonally H:135 cm × V:76.0cm	
Audio Power Output		10W + 10W			
Speaker		8.5cm × 12.5cm oval type × 2 (Oblique corn)			
Antenna Terminal (VHF/UHF, ATSC / DIGITAL CABLE IN)		F-type connector, 75Ω unbalanced, coaxial × 2			
Video / Audio Input [INPUT-1/2/3/4]	Component Video [INPUT-1/2] 1125i / 750p 525p / 525i S-Video [INPUT-1/3] Video Audio	RCA pin jack × 6 Y : 1V (p-p) (Sync signal: 0.35V(p-p), 3-value sync.), 75 Ω Pb/Pr : ±0.35V(p-p), 75 Ω Y : 1V (p-p), positive (Negative sync provided), 75 Ω Pb/Pr : 0.7V(p-p), 75 Ω Mini-DIN 4 pin × 2 Y: 1V (p-p), positive (Negative sync provided), 75 Ω C: 0.286V (p-p) (Burst signal), 75 Ω 1V (p-p), positive (Negative sync provided), 75 Ω, RCA pin jack × 4 500mV (rms), high impedance, RCA pin jack × 8			
Digital Input	Video Audio	HDMI 2-row 19pin connector × 2 (Digital-input terminal is not compatible with picture signals of personal computer) Digital: HDMI 2-row 19pin connector × 2 Analog: 500mV(rms) (-4dBs), high impedance, RCA pin jack × 2			
PC (RGB) Input		D-sub 3-row 15pin × 1 R/G/B : 0.7V (p-p), 75Ω HD / VD : 1V (p-p) to 5V (p-p), high impedance < Available signal > VGA : 640 pixels × 480 pixels (Horizontal : 31.5kHz / Vertical : 60Hz) XGA : 1024 pixels × 768 pixels (Horizontal : 48.4kHz / Vertical : 60Hz)			
Center Channel Input		500mV(rms) (-4dBs), high impedance, RCA pin jack × 1			
Monitor / Recording Output	S-Video Video Audio	Mini-DIN 4pin × 1 Y: 1V (p-p), 75Ω C: 0.286V(p-p) (burst signal), 75Ω 1V (p-p), 75Ω, RCA pin jack × 1 250mV(rms) (-10dBs), Fs-18dB low impedance, RCA pin jack × 2			
Audio Output	 Variable Fix	RCA pin jack × 2 More than 0 to 1000mV (rms) (+2.2dBs) 500mV(rms) (-4dBs), low impedance (1000Hz when modulated 100%)			
iLink Input/Output		TS In/Out (4-pin, S400) × 2, IEEE1394 compliant DTCP digital copy protection compatible			
Digital Audio Optical Output		Digital SPDIF × 1			
RS-232C		D-sub 2-row 9 pin [External control for TV set]	---	D-sub 2-row 9 pin [External control for TV set]	---
Remote Control Unit		RM-C14G (AA/R6 / UM-3 battery × 2)			

Design & specifications are subject to change without notice.

SECTION 1
PRECAUTION

1.1 SAFETY PRECAUTIONS

(1) The design of this product contains special hardware, many circuits and components specially for safety purposes. For continued protection, no changes should be made to the original design unless authorized in writing by the manufacturer. Replacement parts must be identical to those used in the original circuits. Service should be performed by qualified personnel only.

(2) Alterations of the design or circuitry of the products should not be made. Any design alterations or additions will void the manufacturer's warranty and will further relieve the manufacturer of responsibility for personal injury or property damage resulting therefrom.

(3) Many electrical and mechanical parts in the products have special safety-related characteristics. These characteristics are often not evident from visual inspection nor can the protection afforded by them necessarily be obtained by using replacement components rated for higher voltage, wattage, etc. Replacement parts which have these special safety characteristics are identified in the parts list of Service manual. **Electrical components having such features are identified by shading on the schematics and by (⚠) on the parts list in Service manual**. The use of a substitute replacement which does not have the same safety characteristics as the recommended replacement part shown in the parts list of Service manual may cause shock, fire, or other hazards.

(4) **Don't short between the LIVE side ground and ISOLATED (NEUTRAL) side ground or EARTH side ground when repairing.**
Some model's power circuit is partly different in the GND. The difference of the GND is shown by the LIVE : (⊥) side GND, the ISOLATED (NEUTRAL) : (⏚) side GND and EARTH : (⏚) side GND.
Don't short between the LIVE side GND and ISOLATED (NEUTRAL) side GND or EARTH side GND and never measure the LIVE side GND and ISOLATED (NEUTRAL) side GND or EARTH side GND at the same time with a measuring apparatus (oscilloscope etc.). If above note will not be kept, a fuse or any parts will be broken.

(5) When service is required, observe the original lead dress. Extra precaution should be given to assure correct lead dress in the high voltage circuit area. Where a short circuit has occurred, those components that indicate evidence of overheating should be replaced. Always use the manufacturer's replacement components.

(6) **Isolation Check (Safety for Electrical Shock Hazard)**
After re-assembling the product, always perform an isolation check on the exposed metal parts of the cabinet (antenna terminals, video/audio input and output terminals, Control knobs, metal cabinet, screw heads, earphone jack, control shafts, etc.) to be sure the product is safe to operate without danger of electrical shock.

a) **Dielectric Strength Test**
The isolation between the AC primary circuit and all metal parts exposed to the user, particularly any exposed metal part having a return path to the chassis should withstand a voltage of 3000V AC (r.m.s.) for a period of one second. (. . . Withstand a voltage of 1100V AC (r.m.s.) to an appliance rated up to 120V, and 3000V AC (r.m.s.) to an appliance rated 200V or more, for a period of one second.)
This method of test requires a test equipment not generally found in the service trade.

b) **Leakage Current Check**
Plug the AC line cord directly into the AC outlet (do not use a line isolation transformer during this check.). Using a "Leakage Current Tester", measure the leakage current from each exposed metal part of the cabinet, particularly any exposed metal part having a return path to the chassis, to a known good earth ground (water pipe, etc.). Any leakage current must not exceed 0.5mA AC (r.m.s.).
However, in tropical area, this must not exceed 0.2mA AC (r.m.s.).

Alternate Check Method
Plug the AC line cord directly into the AC outlet (do not use a line isolation transformer during this check.). Use an AC voltmeter having 1000Ω per volt or more sensitivity in the following manner. Connect a 1500Ω 10W resistor paralleled by a 0.15μF AC-type capacitor between an exposed metal part and a known good earth ground (water pipe, etc.). Measure the AC voltage across the resistor with the AC voltmeter. Move the resistor connection to each exposed metal part, particularly any exposed metal part having a return path to the chassis, and measure the AC voltage across the resistor. Now, reverse the plug in the AC outlet and repeat each measurement. Any voltage measured must not exceed 0.75V AC (r.m.s.). This corresponds to 0.5mA AC (r.m.s.).
However, in tropical area, this must not exceed 0.3V AC (r.m.s.). This corresponds to 0.2mA AC (r.m.s.).

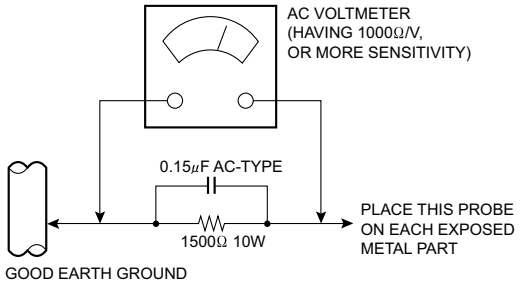

1.2 INSTALLATION

1.2.1 HEAT DISSIPATION

If the heat dissipation vent behind this unit is blocked, cooling efficiency may deteriorate and temperature inside the unit will rise. The temperature sensor that protects the unit will be activated when internal temperature exceeds the predetermined level and power will be turned off automatically.
Therefore, please make sure pay attention not to block the heat dissipation vent as well as the ventilation outlet behind the unit and ensure that there is room for ventilation around it.
Do not put foreign objects near the ventilation holes as this can result in fire or electrical hazards.
Do not block the ventilation holes as this may cause the internal temperature to rise and possibly result fire.

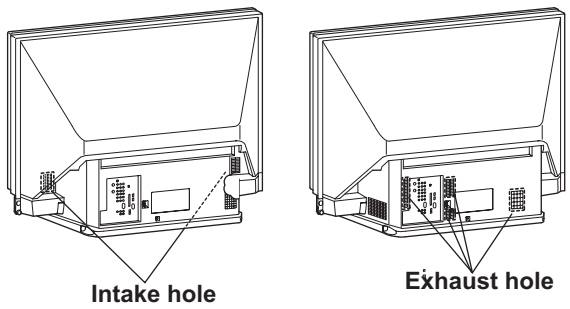

*Diagram differs from actual appearance.

1.2.2 INSTALLATION REQUIREMENTS

Ensure that the minimal distance is maintained, as specified fingure, between the unit with and the surrounding walls, as well as the floor etc.
Install the unit on stable flooring.
Take precautionary measures to prevent the unit from tipping in order to protect against accidents and earthquakes.

CAUTION FOR INSTALLATION

- Do not tilt the TV towards the left or right, or toward the back.
- Install the TV in a corner on the floor so as to keep cords out of the way.
- The TV will generate a slight amount of heat during operation. Ensure that sufficient space is available around the TV to allow satisfactory cooling.

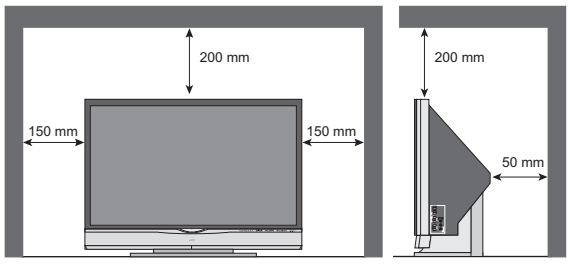

*Diagram differs from actual appearance.

1.3 LAMP UNIT HANDLING CAUTION

LAMP UNIT : TS-CL110UAA

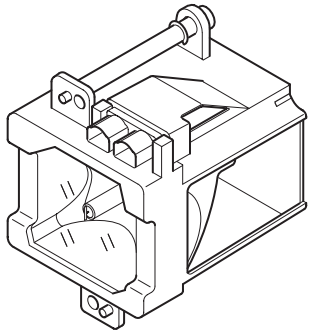

1.3.1 PRECAUTION FOR LAMP UNIT

The lamp emits high intensity white, ultraviolet and infrared light. Do not look directly at the light during service.
Also, do not touch the lamp directly as it presents a burn hazard.
Handle with extra care. This lamp emits high heat and contains high-pressure during use.
Do not give any impact as this may cause the broken lamp.

1.3.2 HOW TO CONFIRM LAMP OPERATING TIME

- MAXIMUM COUNT TIME= **65535 hours**
  (1) Set to **"0 minutes"** using the **[SLEEP TIMER]** key.
  (2) Press the **[VIDEO STATUS]** key and **[DISPLAY]** key simultaneously, then enter the SERVICE MODE.
  (3) When the SERVICE MENU SCREEN is displayed, press **[2]** key to enter the SELF CHECK MODE.
  (4) The use time of a lamp is displayed on middle of the screen by the hexadecimal number of 4 figures.

SERVICE MENU SCREEN

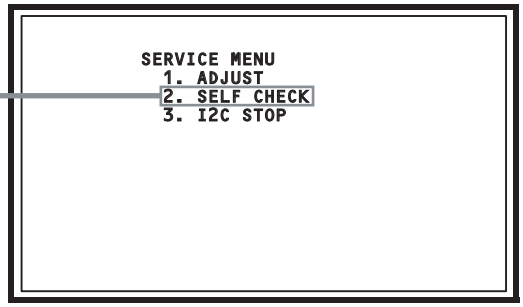

SELF CHECK MODE SCREEN (Page 1)

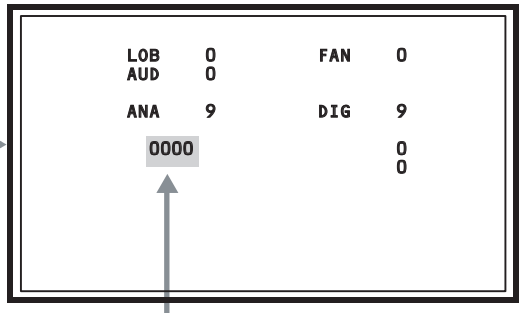

Lamp operation time (Hexadecimal)

CALCULATION EXAMPLE OF LAMP USE TIME
Ex. Display number=12EF
$1x16^3+2x16^2+Ex16+Fx1=1x4096+2x256+14x16+15=4847$ hours

1.3.3 LAMP UNIT REPLACEMENT

(1) The lamp replacement message will appear when need to change the lamp. After replace the lamp, need to reset the timer which is built into TV.
(2) Lamp use time can be check at the lamp message MENU. If lamp use time exceeds **5000 hours**, the message of Fig.1 will be displayed on a screen.
(3) If Fig.1 message appears when turn the TV on, need to replace the lamp.
(4) Use the lamp timer reset only after replacing the lamp.

NOTE:

- This message will appear every time turn on the TV, when the lamp needs to be replaced. Press the **[OK]** key to make the message disappear, or replace the lamp.

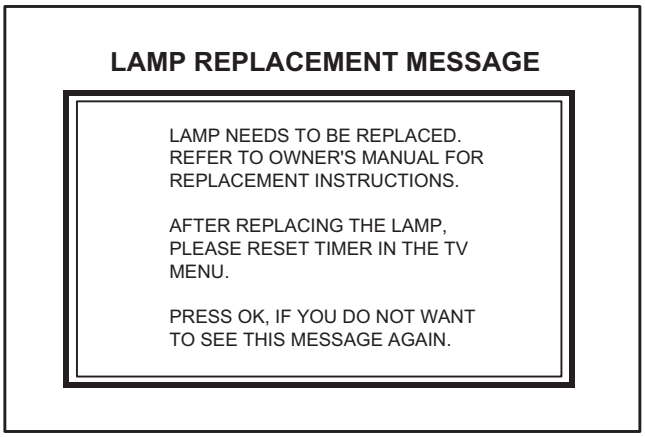

Fig.1

1.3.4 HOW TO REPLACE THE LAMP UNIT

- Refer to the "**USERS GUIDE**" for a detailed operating description.

(1) Turn off the TV power.
(2) After the LAMP LED light has stopped blinking, disconnect the power cord from the AC outlet.
(3) Loosen 1 screw then take out the lamp cover below the left side of the TV.
(4) Loosen 2 screws then take out the lamp unit.
(5) Install the new lamp unit.
(6) Re-install the lamp cover.

NOTE:

- After installing the new lamp unit, do not forget to reset the lamp timer.

1.3.5 HOW TO RESET THE LAMP TIMER

- Refer to the "**USERS GUIDE**" for a detailed operating description.

(1) Press the **[MENU]** key to select CLOCK / TIMERS.
(2) Select the <LAMP TIMER RESET> with **[▲]** / **[▼]** keys.
(3) Enter the <LAMP TIMER RESET> mode, the following message will appears.

PRESS OK TO RESET THE LAMP TIMER

(4) Press the **[OK]** key while the above message appears on the screen.
(5) The lamp timer has now been reset, and the following message will appear.

THE LAMP TIMER IS RESET SUCCESSFULLY

1.3.6 PRECAUTION FOR REPLACEMENT

- Do not replace the LAMP UNIT immediately after the projector has been used.
- The temperature of the LAMP UNIT is still high and could cause a burn.
- Allow a cooling period of 1 hour or more before performing replacement.
- Before starting LAMP UNIT replacement work, turn off the MAIN POWER switch, and disconnect the AC power cord plug from the wall outlet.
- If touched, the lamp glass surface may rupture and burns may result. Do not touch the glass portion or metal portion. Handle only plastic handle.
- The replaced old lamp can be discarded in the same manner as a fluorescent lamp. Check local ordinances and dispose of the used lamp as prescribed.

1.4 SERVICE PARTS KIT INSTRUCTIONS

Due to the character of this product, these OPTICAL /DRIVE ASS'Y are prepared.
Please note these OPTICAL/DRIVE ASS'Y when replacing or ordering the parts.

OPTICAL/DRIVE ASS'Y

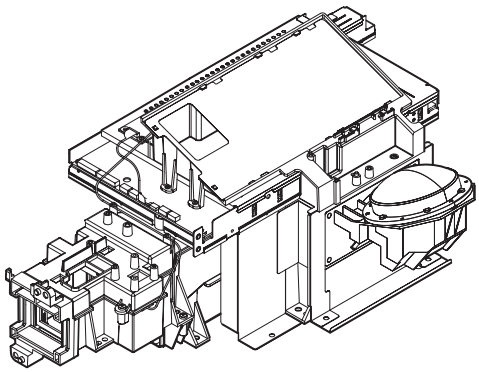

1.4.1 PART NUMBER AND CONSTRUCTION

Kit parts number	Kit part name
TS-COP13A-SAA	OPTICAL / DRIVE ASS'Y

1.4.2 OPTICAL / DRIVE ASS'Y CONSTRUCTION

(1) OPTICAL BLOCK
(Included D-ILA DEVICE, PROJECTION LENS)
(2) OPTICAL BASE
(3) DRIVE PWB ASS'Y
This PWB is mounted with 1 memory IC saved with adjustment, setting data of the drive circuit.
(4) SHIELD COVER
*The following parts without the kits part.
- REMOTE SENSOR PWB ASS'Y
- LAMP UNIT
- LAMP FAN DUCT
- THERMOSTAT

1.4.3 PRECAUTION FOR USING

(1) In the case of the following defects/problems, replace this kit (OPTICAL/DRIVE ASS'Y)
a) Picture defect caused by optical system/D-ILA device related parts.
b) Picture defect caused by drive circuit.
(2) The DRIVE PWB ASS'Y is mounted with a memory IC [IC3753] saved with adjustment/setting data(GAMMA, SHADING, etc.) of the drive circuit.
The data of this memory IC is in the optimal state according to individual D-ILA devices and each section of the OPTICAL BLOCK.
(3) When replace the DRIVE PWB ASS'Y, take off the 1 memory IC from the original board and replace with new one. When replace the DRIVE PWB ASS'Y, do same manner. Replace 1 memory IC.
(4) After the replacement of the OPTICAL BLOCK, projection lens focus adjustment and drive convergence / projection adjustment are required.

1.5 SCREEN HANDLING CAUTIONS

1.5.1 SCREEN STORAGE

Store the SCREEN ASS'Y in a standing position in order to avoid deformation. If the screen is stored horizontally, there is risk of deforming the screen face.
When necessary to place the SCREEN ASS'Y horizontally, position the screen side upwards and sure to place spacers between the screen and resting site (floor or stand etc.) to prevent the screen from sagging.

1.5.2 SCREEN SURFACE

Since the screen surface is easily scratched or soiled, use ample care when handling.

1.5.3 PRECAUTIONS FOR CLEANING AND REPLACEMENT

- The SCREEN ASS'Y is made from the lenticular lens and fresnel lens. The anti static proceeding and the surface of the lenticular lens. Rubbing the surface with something hard, the coating may peel off.
- When the screen is dirty, gently wipe it with a soft cloth.
  If the screen is very dirty, wipe it down with a cloth dipped in a diluted kitchen cleaner (neutrality detergent) and thoroughly wrung-out. Then wipe immediately after with clean, dry cloth.
  Never use the organic solvent such as the alcohol or benzine.
- The SCREEN ASS'Y replacement is required if the coating was peel off. Alkaline detergent or acidity detergent can not be be used.
- The notched side of the lenticular lens and the fresnel lens are faced each other.
- Do not rub the screen when cleaning it or replaceing it. Rubbing the screen may cause of the scratch of the screen by its notch.

SECTION 2
SPECIFIC SERVICE INSTRUCTIONS

2.1 SYSTEM SETTEING

Be sure to carry out the following operation at the end of the procedure.

(1) Set to **"0 minutes"** using the **[SLEEP TIMER]** key.
(2) While **"0 minutes"** is displayed, press the **[VIDEO STATUS]** key and **[DISPLAY]** key simultaneously, then enter the SERVICE MODE.
(3) When the SERVICE MENU SCREEN is displayed, press **[2]** key to enter the self check mode.
(4) Turn off the power by pressing the **[POWER]** key on the remote control unit.

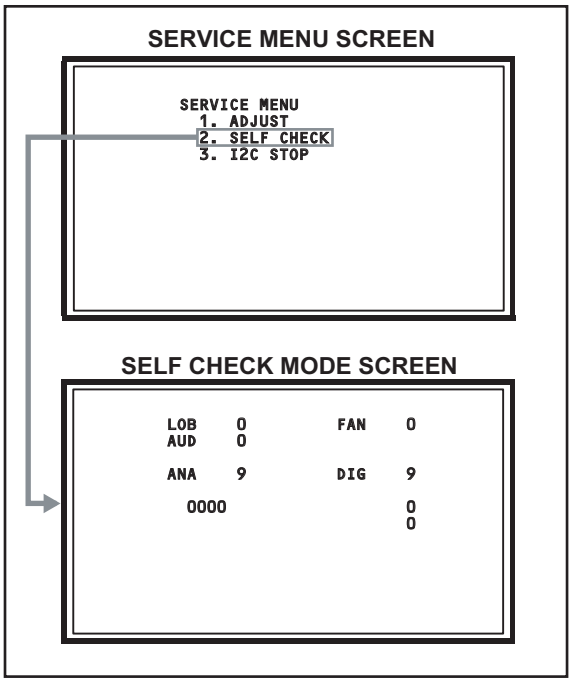

2.2 FEATURES

Built in ATSC (Advanced Television Systems Committee) TUNER
This TV can receive both Digital broadcasting (ATSC) and Analogue broadcasting.

D.I.S.T. (Digital Image Scaling Technology)
This system uses line interpolation to double the number of scanning lines and achieve high resolution, flicker-free picture.

SMART CAPTION
Smart caption will appear when you press the MUTING button, only on channels where the broadcast contains CLOSED CAPTION information.

VIDEO STATUS
Expression of a favorite screen can be chosen by the VIDEO STATUS function.

DIGITAL INPUT
Digital-in will display when any picture signal in Digital-in is displayed.

V-CHIP
Since the V-CHIP is built in, it can choose, view and listen to a healthy program.

MTS STEREO
The voice multiplex function of the MTS system is built in. (MTS = Multi channel Television Sound system)

MPEG Noise Reduction
This function effects the block noise removal and mosquito NR simultaneously.

MaxxBass
This function emphasizes the bass sound.

A.H.S.+
Adds a more spacious surround sound. Music gives basic effect, and movie for more effect.

VOICE ENHANCEMENT
Gives a clearer sound quality of the voices in what you are watching.

NATURAL CINEMA
Watching the movie or animation, press the Natural Cinema to adjust the out line of the images to make thin more sharp.

VIDEO INPUT LABEL
This function is used to label video input connections for the onscreen displays.

2.3 MAIN DIFFRENCE LIST

Item	HD-56FH97	HD-56FN97	HD-61FH97	HD-61FN97
FRONT PANEL COLOR	BLACK	SILVER & BLACK	BLACK	SILVER & BLACK
DIGITAL PWB	SRA0D124A-M2	SRA0D127A-M2	SRA0D123A-M2	SRA0D126A-M2
ANALOG PWB	SRA-1015A-M2	SRA-1016A-M2	SRA-1015A-M2	SRA-1016A-M2
SIDE CONTROL PWB	SRA0L012A-M2	SRA0L013A-M2	SRA0L012A-M2	SRA0L013A-M2

2.4 TECHNICAL INFORMATION

2.4.1 D-ILA DEVICE SPECIFICATION

Item	Content
Resolution	H: 1952 × V:1088
Pixel number	about 2123776
Pixel size	H : 8.1μm × V :8.1μm
Aspect ratio	16 : 9
Contrast ratio	5000 : 1
Aperture ratio	89% or more
Effective pixel measurement	0.7 inch

2.4.2 PROJECTION UNIT

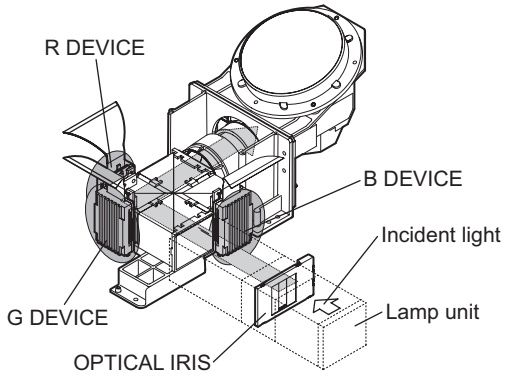

2.4.3 IMAGE LIGHT FLOW

DEVICE UNIT SECTION (TOP VIEW)

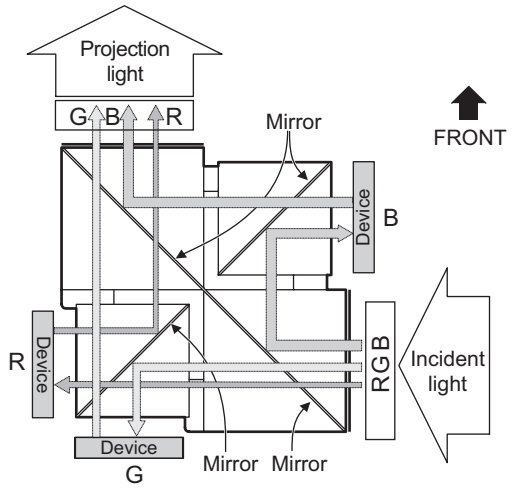

2.4.4 D-ILA DEVICE STRUCTURE

R / G / B DEVICE (SIDE VIEW)

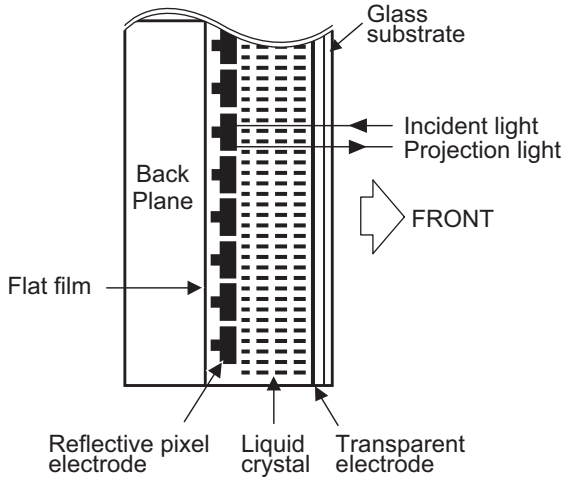

PIXEL VIEW (FRONT VIEW)

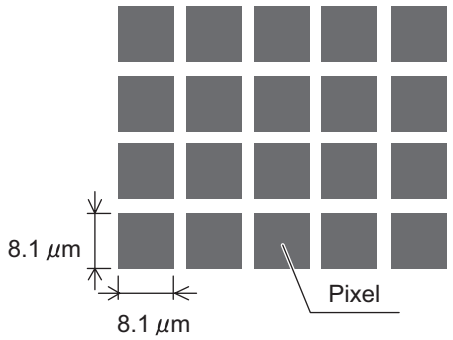

2.4.5 MAIN CPU PIN FUNCTION [IC7601 : DIGITAL PWB ASS'Y]

Pin	Pin name	I/O	Function	Pin	Pin name	I/O	Function
1	VHOLD1	I	Data slice for main screen closed caption	51	NC	O	Not used
2	HFLT1	I/O	LPF for main screen closed caption video input	52	NC	O	Not used
3	NC	O	Not used	53	NC	O	Not used
4	NC	O	Not used	54	NC	O	Not used
5	DIGR0	O	R [0] for OSD	55	NC	O	Not used
6	TB1in	I	AC power for timer clock	56	NC	O	Not used
7	REMO	I	Remote control	57	NC	O	Not used
8	BYTE	I	Data bus width select [L = 16bit (fixed)]	58	NC	O	Not used
9	CNVss	I	CPU programming mode select [Normal = L]	59	NC	O	Not used
10	DIGG0	O	G [0] for OSD	60	NC	O	Not used
11	DIGB0	O	B [0] for OSD	61	NC	O	Not used
12	RESET	I	Reset for main CPU [Reset = L]	62	HSYNC	I	H. sync for OSD
13	Xout	O	System clock osillation (crystal) : 16MHz	63	NC	O	Not used
14	Vss	-	GND	64	VSYNC	I	V. sync for OSD
15	Xin	I	System clock osillation (crystal) : 16MHz	65	NC	O	Not used
16	Vccl	I	3.3V stand-by power supply	66	NC	O	Not used
17	OSC1	I	Clock for OSD	67	NC	O	Not used
18	OSC2	O	Not used : Clock for OSD	68	NC	O	Not used
19	INT1	I	Not used: AV COMPULINK control	69	NC	O	Not used
20	INT0	I	Request for sub(chassis) CPU communication (serial data)	70	NC	O	Not used
21	OUT1	O	Ys (blanking) for OSD	71	P2.1	O	Not used: Clock for Inter IC (serial) bus control
22	OUT2	O	YM (transparence) for OSD	72	P2.0	I/O	Not used: Data for Inter IC (serial) bus control
23	NC	O	Not used	73	NC	O	Not used
24	NC	O	Not used	74	NC	O	Not used
25	NC	O	Not used	75	NC	O	Not used
26	NC	O	Not used	76	NC	O	Not used
27	CTA2/RTS2	O	Not used	77	NC	O	Not used
28	CLK2	O	Not used	78	NC	O	Not used
29	RxD2	I	Digital tuner control	79	NC	O	Not used
30	TxD2	O	Digital tuner control	80	P1.0	O	Not used: Function LED lighting
31	SDA2	I/O	Not used	81	P0.7	O	Not used: Communication LED lighting
32	DIGR1	O	R [1] for OSD	82	P0.6	O	Test point
33	DIGG1	O	G [1] for OSD	83	NC	O	Not used
34	DIGB1	O	B [1] for OSD	84	WAKE	O	Reset for sub(chassis) CPU
35	TxD0	I	Data receive (serial) for external programming	85	CARD_DET	I	Not used
36	RxD0	O	Data transmission (serial) for external programming	86	POWER_SW	I	Power switch (mechanical) detection
37	CLK0	I	Clock for external programming	87	SDA	I/O	Data for Inter IC (serial) bus control : memory
38	RTS0	O	Busy for external programming [Operation = H]	88	SLC	O	Clock for Inter IC (serial) bus control : memory
39	P5.7	I	Not used	89	DIGR2	O	R [2] for OSD
40	P5.6	O	Not used	90	DIGG2	O	G [2] for OSD
41	HOLD	I	CPU programming mode select [Normal = H]	91	DIGB2	O	B [2] for OSD
42	P5.4	O	Not used	92	NC	O	Not used
43	P5.3	O	Not used	93	KEY2	I	Key scan data for front control button (MENU/CH+/CH-) KEY2
44	P5.2	O	Not used	94	KEY1	I	Key scan data for front control button (INPUT/VOL+/VOL-) KEY1
45	P5.1	O	Not used	95	VHOLD2	I	Data slice for sub screen closed caption
46	WR	O	CPU programming mode select [Normal = L]	96	HLF2	I/O	LPF for sub screen closed caption video input
47	P4.7	O	Data transmission for sub(chassis) CPU communication (serial)	97	CVIN2	I	Video(Y) for sub screen closed caption
48	P4.6	I	Data receive for sub(chassis) CPU communication (serial)	98	TVSETB	I	Test terminal [L Fixed]
49	P4.5	I	Clock for sub(chassis) CPU communication (serial)	99	VCCE	I	5V stand-by power supply
50	P4.4	O	Not used	100	CVIN1	I	Video(Y) for main screen closed caption

SECTION 3
DISASSEMBLY

3.1 DISASSEMBLY PROCEDURE

CAUTION AT DISASSEMBLY:

- **Be sure to perform the SYSTEM SETTEING, at the end of the procedure.**
- Make sure that the power cord is disconnected from the outlet.
- Pay special attention not to break or damage the parts.
- When removing each board, remove the connectors as required. Taking notes of the connecting points (connector numbers) makes service procedure manageable.
- Make sure that there is no bent or stain on the connectors before inserting, and firmly insert the connectors.
- Wait until the LAMP UNIT has cool down is completely.
- While not in repair service, place the chassis back its original position.

3.1.1 FRONT SIDE DISASSEMBLY

3.1.1.1 REMOVING THE SPEAKER GRILL (Fig.1)

(1) Remove the 4 screws **[A]**.
(2) Remove the 2 claws under the SPEAKER GRILL.
(3) Remove the SPEAKER GRILL by pressing it downward.

3.1.1.2 REMOVING THE FRONT LED PWB (Fig.1)

- Remove the SPEAKER GRILL.
  (1) Remove the 3 screws **[B]**.
  (2) Remove the FRONT LED PWB.

3.1.1.3 REMOVING THE CENTER COVER (Fig.1)

- Remove the SPEAKER GRILL.
  (1) Remove the 2 screws **[C]**.
  (2) Remove the CENTER COVER.

3.1.1.4 REMOVING THE FRONT PANEL WITH SCREEN ASS'Y (Fig.1)

- Remove the SPEAKER GRILL.
  (1) Remove the 8 screws **[D]**.
  (2) Remove the 10 screws **[E]**.
  (3) Remove the FRONT PANEL with SCREEN ASS'Y.

CAUTION:

- **Place the FRONT PANEL with SCREEN ASS'Y on a flat table without fail.**
- **Because of the large size, at least 2 persons are recommended for removal and reassemble.**
- **Use care not to scratch the screen during work.**
- **Do not leave the FRONT PANEL with SCREEN ASS'Y removed for long time to prevent soiling from dust.**

3.1.1.5 REMOVING THE SCREEN ASS'Y (Fig.1)

- Remove the SPEAKER GRILL.
- Remove the FRONT PANEL with SCREEN ASS'Y.
  (1) Remove the 10 screws **[F]**.
  (2) Remove the 8 screws **[G]**.
  (3) Remove the SCREEN BRACKET.
  (4) Remove the SCREEN ASS'Y from the FRONT PANEL

NOTE:

- When replacing the SCREEN ASS'Y, confirm each SPACER is fit on the SCREEN BRACKET and the FRONT PANEL without fail.
- Do not touch the front of the SCREEN ASS'Y.
- Do not shock the SCREEN ASS'Y.
- Because of the large size, at least 2 persons are recommended for removal and reassemble.

3.1.1.6 REMOVING THE SPEAKER (Fig.1)

- Remove the SPEAKER GRILL.
- Remove the FRONT PANEL with SCREEN ASS'Y.
  (1) Remove the 4 screws **[H]**.
  (2) Remove the SPEAKER.
  (3) Remove the opposite SPEAKER by the same method.

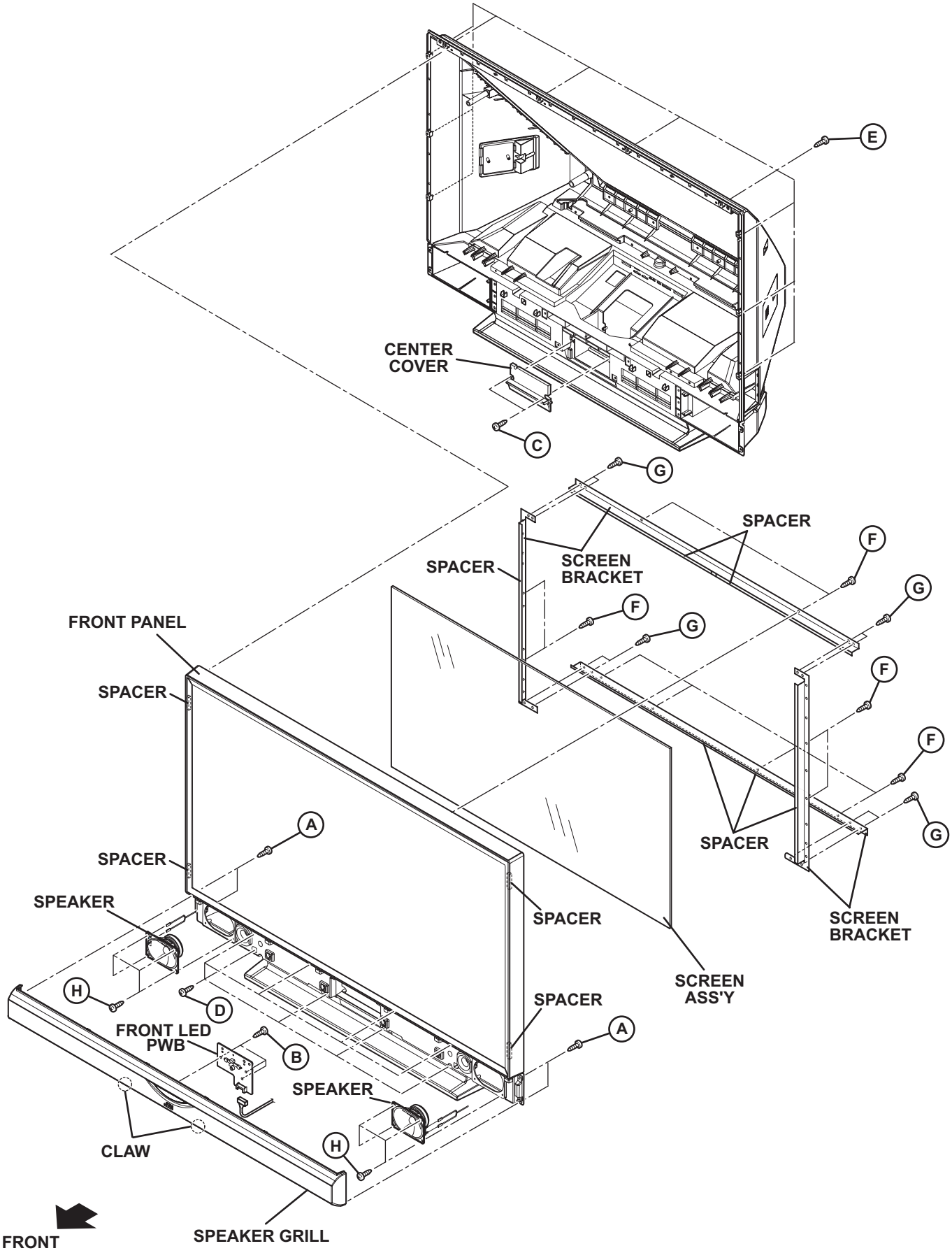
E
CENTER COVER
C
G
SPACER
SCREEN BRACKET
SPACER
F
G
FRONT PANEL
F
G
SPACER
F
F
G
SPACER
SCREEN BRACKET
A
SPACER
SPEAKER
SPACER
H
D
SCREEN ASS'Y
SPACER
FRONT LED PWB
B
A
SPEAKER
CLAW
H
FRONT
SPEAKER GRILL

Fig.1

3.1.1.7 REMOVING THE MIRROR (Fig.2)

- Remove the SPEAKER GRILL.
- Remove the FRONT PANEL with the SCREEN ASS'Y.
  (1) Remove the 4 screws **[A]** attaching the MIRROR HOLDER of the upper side.
  (2) Remove the 6 screws **[B]** attaching the MIRROR HOLDER of left and right side.
  (3) Loosen the 4 screws **[C]** attaching the MIRROR HOLDER of bottom side.
  (4) Raise slightly to disengage of the MIRROR from the bottom MIRROR HOLDER.
  (5) Remove the MIRROR.

NOTE:

- Do not touch the front of the MIRROR.
- Do not shock the MIRROR.
- Because of the large size, at least 2 persons are recommended for removal and reassemble.

3.1.1.8 REMOVING THE SIDE CONTROL PWB (Fig.2)

- Remove the SPEAKER GRILL.
- Remove the FRONT PANEL with the SCREEN ASS'Y.
  (1) Remove the 3 screws **[D]**.
  (2) Remove the SIDE CONTROL PWB from the SIDE CONTROL BASE.

NOTE:

The SIDE CONTROL BASE is taken out by removing six claws.

3.1.1.9 REMOVING THE SUPPORT BRACKET (Fig.2)

- Remove the SPEAKER GRILL.
- Remove the FRONT PANEL with the SCREEN ASS'Y.
  (1) Remove the 3 screws **[E]**.
  (1) Remove the SUPPORT BRACKET.
  (2) Remove the opposite SUPPORT BRACKET by the same method.

3.1.1.10 REMOVING THE BACK COVER (Fig.2)

- Remove the SPEAKER GRILL.
- Remove the FRONT PANEL with the SCREEN ASS'Y.
- Remove the SUPPORT BRACKET.
  (1) Remove the 2 screws **[F]** and 2 screws **[G]** from rear side.
  (2) Remove the 4 screws **[H]**.
  (3) Remove the BACK COVER.

CAUTION :

Because of the large size, at least 2 persons are recommended for removal and reassemble.

3.1.1.11 REMOVING THE SHADE COVER (Fig.2)

- Remove the SPEAKER GRILL.
- Remove the FRONT PANEL with the SCREEN ASS'Y.
- Remove the SUPPORT BRACKET.
- Remove the BACK COVER.
  (1) Remove the 2 screws **[J]**.
  (2) Remove the SHADE COVER.

3.1.1.12 REMOVING THE FILTER (Fig.2)

(1) Remove the 1 screw **[K]**.
(2) Remove the FILTER COVER.
(3) Remove the FILTER from FILTER COVER.
(4) Remove the opposite FILTER by the same method.

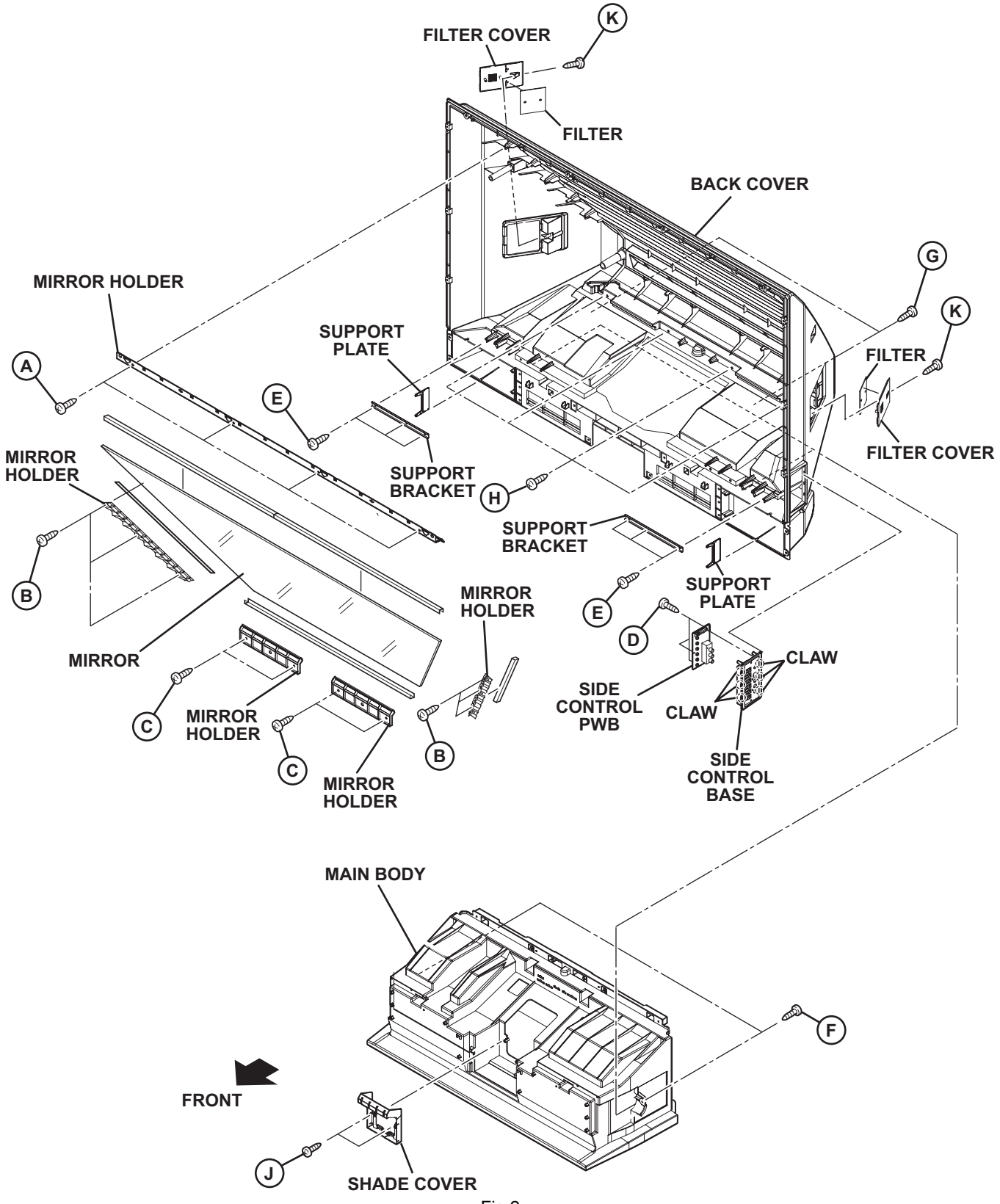
FILTER COVER
K
FILTER
BACK COVER
MIRROR HOLDER
G
K
SUPPORT PLATE
A
E
FILTER
FILTER COVER
MIRROR HOLDER
SUPPORT BRACKET
H
SUPPORT BRACKET
B
SUPPORT PLATE
E
D
MIRROR HOLDER
MIRROR
CLAW
SIDE CONTROL PWB
CLAW
C
MIRROR HOLDER
B
C
SIDE CONTROL BASE
MIRROR HOLDER
MAIN BODY
F
FRONT
J
SHADE COVER

Fig.2

3.1.2 REAR SIDE DISASSEMBLY

3.1.2.1 REMOVING THE LAMP UNIT (Fig.3)

(1) Remove the 1 screw **[A]**.
(2) Remove the LAMP COVER.
(3) Remove the 2 screws **[B]**
(4) Pull out the LAMP UNIT.

NOTE :

- Do not leave the LAMP COVER removed for long time to prevent dirt and dust form covering the lens.
- Make sure that the LAMP COVER is completely installed.

3.1.2.2 REMOVING THE BODY COVER (Fig.3)

(1) Remove the 9 screws **[C]**.
(2) Remove the 5 screws **[E]**.
(3) Remove the BODY COVER.

NOTE :

- Do not leave the BODY COVER removed for long time to prevent soiling from dust.

3.1.2.3 REMOVING THE MAIN UNIT (Fig.3)

- Remove the LAMP COVER.
- Remove the BODY COVER.

(1) Remove the 4 screws **[F]**
(2) Remove the BODY BRACKET.
(3) Remove the 2 screws **[G]**
(4) The MAIN UNIT is pulled out to the back side.

CAUTION :

- **Except for confirmation of projection images on the screen and audio output through the speakers, the removed MAIN UNIT is still workable in the same state as if it is still built-in the TV set. Therefore, the MAIN UNIT can be removed, if necessary, for board diagnosis, electric testing, etc. apart from confirmation of screen images and audio output. Do not leave the MAIN UNIT removed for long time to prevent soiling from dust.**
- **Because of the large size, at least 2 persons are recommended for removal and reassemble.**
- **When carrying the MAIN UNIT, use care not to drop, shock or shake it.**
- **Do not stain or damage the projection lens.**
- **Do not look directly at the light during service.**
- **Do not touch the lamp directly as it presents a burn hazard.**

NOTE :

- When not performing repair work, attach the cap on the lens to preventing dust from covering.
- When mounting to the set, make sure the front of the lens is in contact with the cushion on the set (body) side.
- Make sure that FRONT LED PWB connector is completely connect to the ANALOG PWB connector.
- When wire clamps are removed during work, use care to restore them precisely to their original positions. Performance can be affected if these are not returned to the original positions.

3.1.2.4 REMOVING THE AV TERMINAL BOARD (Fig.3)

- Remove the LAMP COVER.
- Remove the BODY COVER.
- Remove the BODY BRACKET.
- Remove the MAIN UNIT.

(1) Remove the 3 screws **[H]**, 3 screws **[J]** and the 8 screws **[K]**.
(2) Remove the 2 hex screws **[L]**.
(3) Remove the nut attaching the ANTENNA TERMINAL.
(4) Remove the AV TERMINAL BOARD.

3.1.2.5 REMOVING THE POWER PWB (Fig.3)

- Remove the LAMP COVER.
- Remove the BODY COVER.
- Remove the BODY BRACKET.
- Remove the MAIN UNIT.

(1) Remove the POWER CORD.
(2) Remove the 7 screws **[M]**.
(3) Remove the POWER PWB.

3.1.2.6 REMOVING THE TUNER PWB (Fig.3)

- Remove the LAMP COVER.
- Remove the BODY COVER.
- Remove the BODY BRACKET.
- Remove the MAIN UNIT.
- Remove the AV TERMINAL BOARD.

(1) Remove the 1 screw **[N]**.
(2) Remove the HANGER BRACKET with TUNER PWB.
(3) Remove the 3 screws **[P]**.
(4) Remove the TUNER PWB.

3.1.2.7 REMOVING THE ANALOG PWB (Fig.3)

- Remove the LAMP COVER.
- Remove the BODY COVER.
- Remove the BODY BRACKET.
- Remove the MAIN UNIT.
- Remove the AV TERMINAL BOARD.
- Remove the POWER PWB and TUNER PWB.

(1) Remove the 4 screws **[Q]**.
(2) Remove the ANALOG PWB.

3.1.2.8 REMOVING THE DIGITAL PWB (Fig.3)

- Remove the LAMP COVER.
- Remove the BODY COVER.
- Remove the BODY BRACKET.
- Remove the MAIN UNIT.
- Remove the AV TERMINAL BOARD.
- Remove the POWER PWB and TUNER PWB.
- Remove the ANALOG PWB.
  (1) Remove the 1 screw **[R]**.
  (2) Remove the DIGITAL PWB BRACKET with DIGITAL PWB and ATSC TUNER PWB.
  (3) Remove the 8 screws **[S]**.
  (4) Remove the DIGITAL PWB SHIELD COVER.
  (5) Remove the 9 screws **[T]**.
  (6) Remove the DIGITAL PWB.

CAUTION :

- **Make sure to perform the "SYSTEM SETTEING" , when DIGITAL PWB is replaced.**
- **Especially, because the value of F001 (DD) might been changed, go through next steps to confirm the setting value with the remote control unit.**
  (1) Set to "0 minutes" using the [SLEEP TIMER] key.
  (2) While "0 minutes" is displayed, press the [VIDEO STATUS] key and [DISPLAY] key simultaneously, then enter the SERVICE MODE.
  (3) Press [1] key to enter the ADJUSTMENT MODE.
  (4) Select < F001 >.
  (5) Confirm the value to "000", and set it to "000" when not "000".
  (6) Press [MUTING] key to memorize the data.
  (7) Press [BACK] key twice to exit the SERVICE MODE.

3.1.2.9 REMOVING THE ATSC TUNER COOLING FAN (Fig.3)

- Remove the LAMP COVER.
- Remove the BODY COVER.
- Remove the BODY BRACKET.
- Remove the MAIN UNIT.
- Remove the AV TERMINAL BOARD.
- Remove the POWER PWB and TUNER PWB.
- Remove the ANALOG PWB.
  (1) Remove the 1 screw **[R]**.
  (2) Remove the DIGITAL PWB BRACKET with ATSC TUNER PWB.
  (3) Remove the 4 screws **[U]**.
  (4) Remove the ATSC TUNER COOLING FAN.

3.1.2.10 REMOVING THE ATSC TUNER PWB (Fig.3)

- Remove the LAMP COVER.
- Remove the BODY COVER.
- Remove the BODY BRACKET.
- Remove the MAIN UNIT.
- Remove the AV TERMINAL BOARD.
- Remove the POWER PWB and TUNER PWB.
- Remove the ANALOG PWB.
- Remove the ATSC TUNER COOLING FAN.
  (1) Remove the 8 screws **[V]**.
  (2) Remove the ATSC TUNER SHIELD COVER.
  (3) Remove the 5 screws **[W]**.
  (4) Remove the ATSC TUNER PWB.

3.1.2.11 REMOVING THE SD CARD PWB (Fig.3)

- Remove the LAMP COVER.
- Remove the BODY COVER.
- Remove the BODY BRACKET.
- Remove the MAIN UNIT.
  (1) Remove the 2 screws **[X]**.
  (2) Remove the SD CARD BRACKET with the SD CARD PWB.
  (3) Remove the 2 screws **[Y]**.
  (4) Remove the SD CARD PWB.

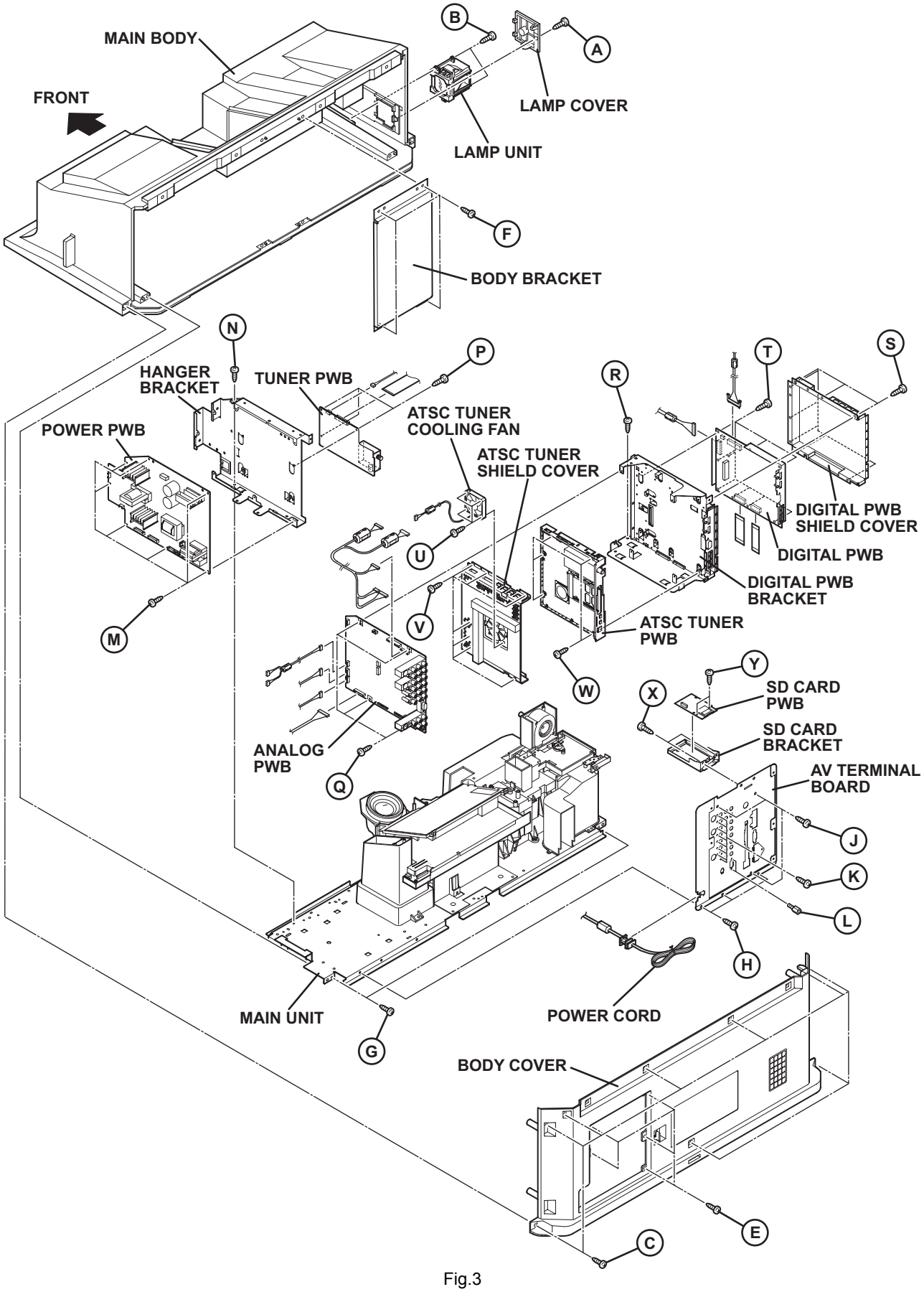
MAIN BODY
FRONT
B
A
LAMP COVER
LAMP UNIT
F
BODY BRACKET
N
HANGER BRACKET
TUNER PWB
P
POWER PWB
ATSC TUNER COOLING FAN
ATSC TUNER SHIELD COVER
R
T
S
DIGITAL PWB SHIELD COVER
DIGITAL PWB
DIGITAL PWB BRACKET
U
V
M
ATSC TUNER PWB
W
Y
X
SD CARD PWB
SD CARD BRACKET
ANALOG PWB
Q
AV TERMINAL BOARD
J
K
L
H
MAIN UNIT
G
POWER CORD
BODY COVER
E
C

Fig.3

3.1.2.12 REMOVING THE LAMP COVER SW PWB (Fig.4)

- Remove the LAMP COVER.
- Remove the BODY COVER.
- Remove the BODY BRACKET.
- Remove the MAIN UNIT.
  (1) Remove the 2 screws **[A]**.
  (2) Remove the LAMP COVER SW BRACKET with LAMP COVER SW PWB.
  (3) Remove the 1 screw **[B]**.
  (4) Remove the LAMP COVER SW PWB.

3.1.2.13 REMOVING THE TERMOSTAT (Fig.4)

- Remove the LAMP COVER.
- Remove the BODY COVER.
- Remove the BODY BRACKET.
- Remove the MAIN UNIT.
  (1) Remove the 2 screws **[C]**.
  (2) Remove the THERMOSTAT.

3.1.2.14 REMOVING THE LAMP FAN DUCT (Fig.4)

- Remove the LAMP COVER.
- Remove the BODY COVER.
- Remove the BODY BRACKET.
- Remove the MAIN UNIT.
- Remove the THERMOSTAT.
  (1) Remove the 5 screws **[D]**.
  (2) Remove the LAMP FAN DUCT.

3.1.2.15 REMOVING THE LAMP COOLING FAN -1 (Fig.4)

- Remove the LAMP COVER.
- Remove the BODY COVER.
- Remove the BODY BRACKET.
- Remove the MAIN UNIT.
- Remove the LAMP FAN DUCT.
  (1) Remove the 2 screws **[E]**.
  (2) Remove the COOLING FAN BRACKET by pulling transversally.
  (3) Remove the 2 screws **[F]**.
  (4) Remove the LAMP COOLING FAN-1.

3.1.2.16 REMOVING THE LAMP COOLING FAN -2 (Fig.4)

- Remove the LAMP COVER.
- Remove the BODY COVER.
- Remove the BODY BRACKET.
- Remove the MAIN UNIT.
- Remove the LAMP FAN DUCT.
- Remove the COOLING FAN BRACKET.
  (1) Remove the 2 screws **[G]**.
  (2) Remove the LAMP COOLING FAN -2.

3.1.2.17 REMOVING THE LAMP BALLAST BLOCK (Fig.4)

- Remove the LAMP COVER.
- Remove the BODY COVER.
- Remove the BODY BRACKET.
- Remove the MAIN UNIT.
  (1) Remove the 2 screws **[H]**.
  (2) Remove the LAMP BALLAST UNIT.
  (3) Remove the 1 screw **[J]**.
  (4) Remove the LAMP BALLAST BRACKET.

3.1.2.18 REMOVING THE IRIS PWB (Fig.4)

- Remove the LAMP COVER.
- Remove the BODY COVER.
- Remove the BODY BRACKET.
- Remove the MAIN UNIT.
  (1) Remove the 2 screws **[K]**.
  (2) Remove the IRIS PWB.

3.1.2.19 REMOVING THE REMOCON PWB(Fig.4)

- Remove the LAMP COVER.
- Remove the BODY COVER.
- Remove the BODY BRACKET.
- Remove the MAIN UNIT.
  (1) Remove the 1 screw **[L]**.
  (2) Remove the REMOCON PWB.

3.1.2.20 REMOVING THE OPTICAL / DRIVE ASS'Y (Fig.4)

- Remove the LAMP COVER.
- Remove the BODY COVER.
- Remove the BODY BRACKET.
- Remove the MAIN UNIT.
- Remove the LAMP FAN DUCT.
  (1) Remove the 7 screws **[M]**, 6 screws **[N]** and 1 screw **[P]**.
  (2) Remove the OPTICAL / DRIVE ASS'Y.
    - OPTICAL BLOCK (D-ILA device, PBS, Field lens, Integrater, Mirror etc.)
    - PROJECTION LENS
    - Optical base
    - DRIVE PWB
    - IRIS PWB
    - TOP DUCT
    - SHIELD COVER

NOTE :

- The OPTICAL / DRIVE ASS'Y contains precision optical components.
- Handle carefully and avoid imparting strong shock.
- OPTICAL / DRIVE ASS'Y construction
- When not performing repair work, attach the cap on the lens to preventing dust from covering.
- When mounting to the set, make sure the front of the lens side is in contact with the cushion on the body side.
- Do not leave the OPTICAL / DRIVE ASS'Y removed for long time to prevent soiling from dust.

3.1.2.21 REMOVING THE DRIVE PWB (Fig.4)

- Remove the LAMP COVER.
- Remove the BODY COVER.
- Remove the BODY BRACKET.
- Remove the MAIN UNIT.
  (1) Slide the TOP DUCT PLATE and remove it.
  (2) Remove the 1 screw **[Q]** and the 1 screw **[R]**.
  (3) Remove the TOP DUCT.
  (4) Remove the SHIELD TOP CASE.
  (5) Remove the 3 screws **[S]** and the 1 screw **[T]**.
  (6) Remove the DRIVE PWB.

3.1.2.22 REMOVING THE OPTICAL BLOCK COOLING FAN (Fig.4)

- Remove the LAMP COVER.
- Remove the BODY COVER.
- Remove the BODY BRACKET.
- Remove the MAIN UNIT.
- Remove the LAMP FAN DUCT.
- Remove the OPTICAL / DRIVE ASS'Y
  (1) Remove the 2 screws **[U]**.
  (2) Remove the SIROCCO TOP CASE.
  (3) Remove the 2 screws **[V]**.
  (4) Remove the OPTICAL BLOCK COOLING FAN.

3.1.2.23 REMOVING THE PROJECTION LENS (Fig.4)

- Remove the LAMP COVER.
- Remove the BODY COVER.
- Remove the BODY BRACKET.
- Remove the MAIN UNIT.
  (1) Remove the 4 screws **[W]**.
  (2) Remove the PROJECTION LENS.

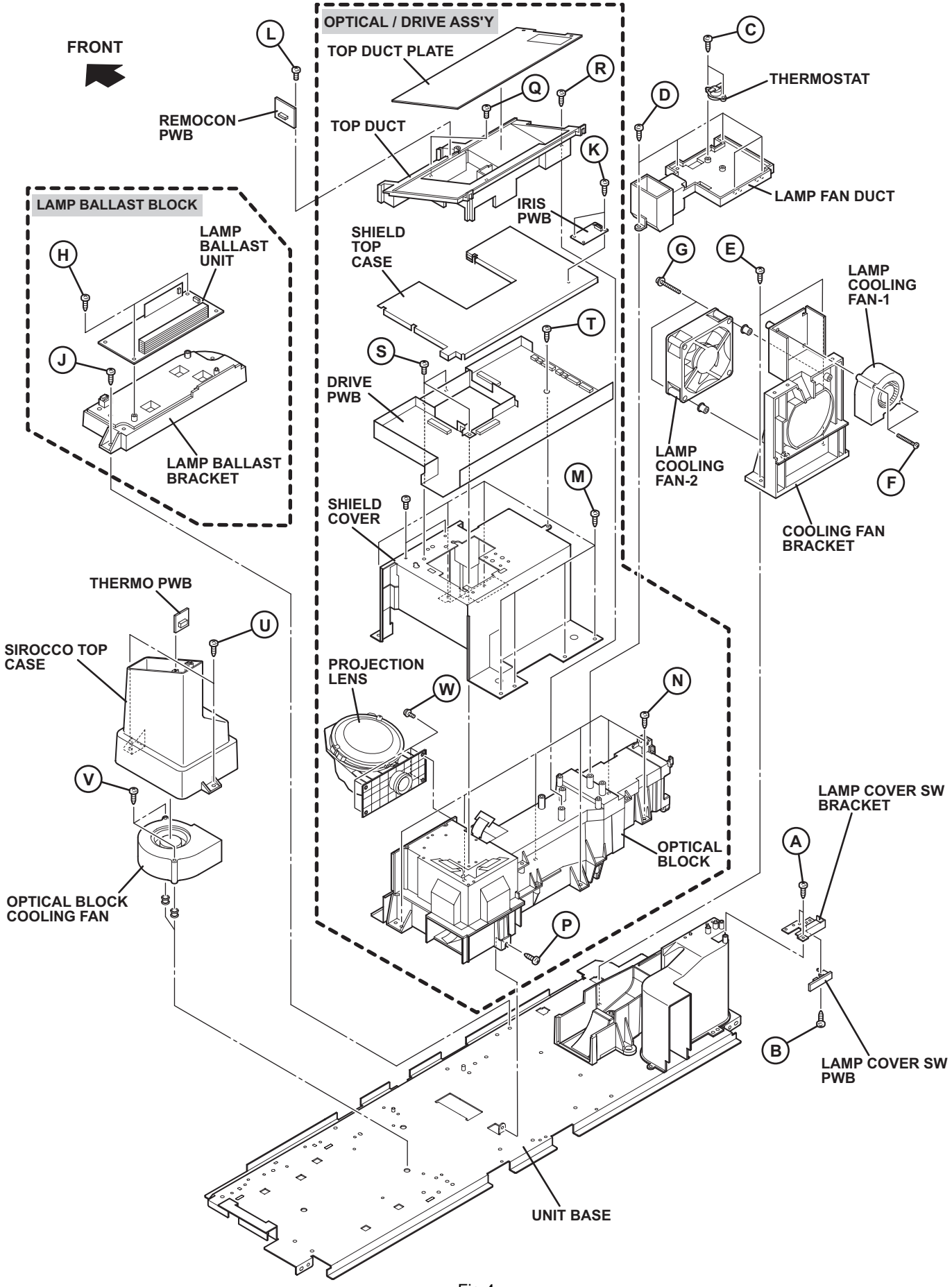
FRONT
OPTICAL / DRIVE ASS'Y
TOP DUCT PLATE
TOP DUCT
REMOCON PWB
LAMP BALLAST BLOCK
LAMP BALLAST UNIT
LAMP BALLAST BRACKET
SHIELD TOP CASE
DRIVE PWB
IRIS PWB
THERMOSTAT
LAMP FAN DUCT
LAMP COOLING FAN-1
LAMP COOLING FAN-2
COOLING FAN BRACKET
SHIELD COVER
THERMO PWB
SIROCCO TOP CASE
PROJECTION LENS
OPTICAL BLOCK
OPTICAL BLOCK COOLING FAN
LAMP COVER SW BRACKET
LAMP COVER SW PWB
UNIT BASE
L
C
R
Q
D
K
H
J
G
E
T
S
M
U
W
N
V
P
A
B
F

Fig.4

3.2 MEMORY IC REPLACEMENT

- This model uses the memory IC.
- This memory IC stores data for proper operation of the video and drive circuits.
- When replacing, be sure to use an IC containing this (initial value) data.

3.2.1 MEMORY IC TABLE

Simbol	Number of pins	Mounting PWB	Main content of data
IC3753	8-pin	DRIVE PWB	Adjustment and setting data (GAMMA, SHADING, etc.) of IC3701(DRIVE CPU) are memorized.
IC7201	48-pin	DIGITAL PWB	Progaram(Video process) of IC6001(System CPU) is memorized.
IC7602	8-pin	DIGITAL PWB	Setting value of IC7601(MAIN CPU) is memorized.

3.2.2 MEMORY IC REPLACEMENT PROCEDURE

1. Power off
Switch off the power and disconnect the power plug from the AC outlet.

2. Replace the memory IC
Be sure to use the memory IC written with the initial setting values.

3. Power on
Connect the power plug to the AC outlet and switch on the power.

4. Receiving channel setting
Refer to the OPERATING INSTRUCTIONS and set the receive channels (Channels Preset) as described.

5. User setting
Check the user setting items according to the given in page later. Where these do not agree, refer to the OPERATING INSTRUCTIONS and set the items as described.

6. SERVICE MODE setting
Verify what to set in the SERVICE MODE, and set whatever is necessary (Fig.1). Refer to the SERVICE ADJUSTMENT for setting.

3.2.3 SERVICE MODE SETTING

■SERVICE MODE SCREEN

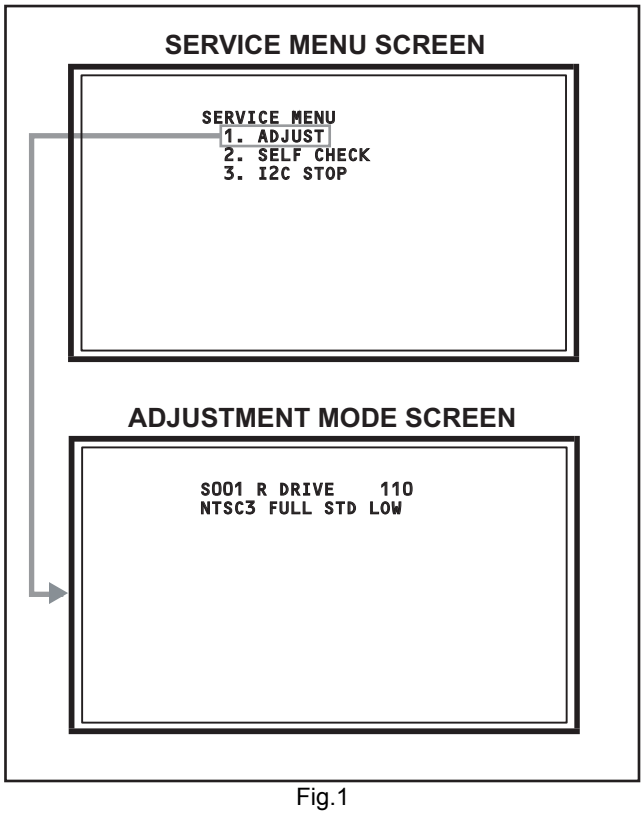

Fig.1

■SETTING ITEM

Setting items	Settings	Item No.
Video system setting	Adjust	S001 - S009
Audio system setting	Adjust	T001 - T003
Main CPU system setting	Fixed	M001 - M224
Drive system setting	Fixed	F001 - F002
(NOT USED)	Fixed	D001
(NOT USED)	Fixed	Z001

3.2.4 SETTINGS OF FACTORY SHIPMENT

3.2.4.1 BUTTON OPERATION

Setting item	Setting position
POWER	Off
CHANNEL	CABLE-02
VOLUME	10
INPUT	TV

3.2.4.2 REMOTE CONTROL DIRECT OPERATION

Setting item		Setting position
INPUT		TV
CHANNEL		CABLE-02
VOLUME		10
MUTING		OFF
DISPLAY		OFF
ASPECT	NTSC, SD	PANORAMA
	ATSC(525i, 525p)	PANORAMA ZOOM
	ATSC(750p, 1125i), HD, 1125p	FULL
	PC	REGULAR
SLEEP TIMER		OFF
THEATER PRO		OFF
NATURAL CINEMA		AUTO
C.C.		OFF
MTS		STEREO
TWIN SOURCE	LEFT SIDE	CABLE-02
	RIGHT SIDE	INPUT-1
SOUND	A.H.S.+	OFF
	VOICE ENHANCEMENT	OFF
	SMART SOUND	OFF
	MaxxBass	OFF
VIDEO STATUS		DYNAMIC

3.2.4.3 REMOTE CONTROL MENU OPERATION

■ PICTURE ADJUST

Customers can adjust the picture setting of menu screen as their own like but the picture standard value during factory shipment is as below.

[NTSC MODE]

Setting item	DYNAMIC	STANDARD	GAME	THEATER
TINT	-02	00	00	00
COLOR	+08	00	00	00
PICTURE	00	00	-10	00
BRIGHT	00	00	00	00
DETAIL	+06	00	00	00
IRIS	+10	00	00	-04
COLOR TEMPERATURE	HIGH	LOW	HIGH	HIGH
COLOR MANAGEMENT	ON	ON	ON	ON
DYNAMIC GAMMA	ON	ON	ON	ON
ADVANCED SMART PICTURE	OFF	ON	ON	ON
DIGITAL VNR	AUTO	AUTO	AUTO	AUTO
MPEG NR	OFF	OFF	OFF	OFF

[HD MODE]

Setting item	DYNAMIC	STANDARD	GAME	THEATER
TINT	-02	00	00	00
COLOR	+08	00	00	00
PICTURE	+03	00	-10	00
BRIGHT	-05	00	00	00
DETAIL	+12	00	00	00
IRIS	+10	00	00	-04
COLOR TEMPERATURE	HIGH	LOW	HIGH	LOW
COLOR MANAGEMENT	ON	ON	ON	ON
DYNAMIC GAMMA	ON	ON	ON	ON
ADVANCED SMART PICTURE	OFF	ON	ON	ON
DIGITAL VNR	AUTO	AUTO	AUTO	AUTO
MPEG NR	OFF	OFF	OFF	OFF

■ **SOUND ADJUST**

Setting item	Setting position
BASS	00
TREBLE	00
BALANCE	00
TURN ON VOLUME	CURRENT
VOLUME LIMIT	50

■ **CLOCK / TIMERS**

Setting item	Setting position
ON / OFF TIMER	NO

■ **INITIAL SETUP**

Setting item	Setting position
VIDEO-1 MONITOR OUT	OFF
TV SPEAKER	ON
AUDIO OUT	FIX
DIGITAL-IN	AUTO
DIGITAL-IN1 AUDIO	AUTO
CENTER CH INPUT	OFF
NOISE MUTING	ON
FRONT PANEL LOCK	OFF
V1 SMART INPUT	OFF
VIDEO INPUT LABEL	All blank
POSITION ADJUSTMENT	Center
POWER INDICATOR	HIGH
LANGUAGE	ENG.
CLOSED CAPTION	OFF
AUTO SHUT OFF	OFF
XDS ID	ON
AUTO TUNER SETUP	Unnecessary to set
V-CHIP	OFF

3.3 REPLACEMENT OF CHIP COMPONENT

3.3.1 CAUTIONS

(1) Avoid heating for more than 3 seconds.
(2) Do not rub the electrodes and the resist parts of the pattern.
(3) When removing a chip part, melt the solder adequately.
(4) Do not reuse a chip part after removing it.

3.3.2 SOLDERING IRON

(1) Use a high insulation soldering iron with a thin pointed end of it.
(2) A 30w soldering iron is recommended for easily removing parts.

3.3.3 REPLACEMENT STEPS

1. How to remove Chip parts

[Resistors, capacitors, etc.]

(1) As shown in the figure, push the part with tweezers and alternately melt the solder at each end.

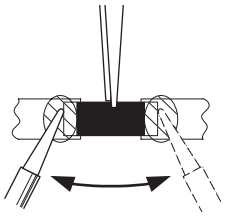

(2) Shift with the tweezers and remove the chip part.

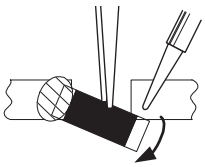

[Transistors, diodes, variable resistors, etc.]

(1) Apply extra solder to each lead.

(2) As shown in the figure, push the part with tweezers and alternately melt the solder at each lead. Shift and remove the chip part.

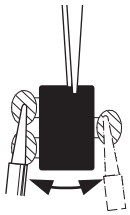

NOTE :
After removing the part, remove remaining solder from the pattern.

2. How to install Chip parts

[Resistors, capacitors, etc.]

(1) Apply solder to the pattern as indicated in the figure.

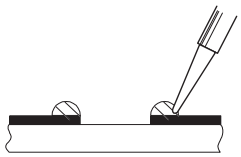

(2) Grasp the chip part with tweezers and place it on the solder. Then heat and melt the solder at both ends of the chip part.

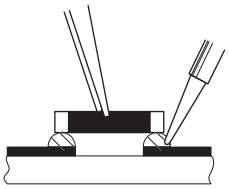

[Transistors, diodes, variable resistors, etc.]

(1) Apply solder to the pattern as indicated in the figure.
(2) Grasp the chip part with tweezers and place it on the solder.
(3) First solder lead **A** as indicated in the figure.

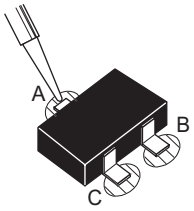

(4) Then solder leads **B** and **C**.

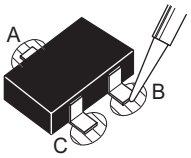

SECTION 4
ADJUSTMENT

4.1 ADJUSTMENT PREPARATION

(1) **There are 2 ways of adjusting this TV : One is with the REMOTE CONTROL UNIT and the other is the conventional method using adjustment parts and components.**
(2) **The adjustment using the REMOTE CONTROL UNIT is made on the basis of the initial setting values. The setting values which adjust the screen to the optimum condition can be different from the initial setting values.**
(3) Make sure that connection is correctly made AC to AC power source.
(4) Turn on the power of the TV and measuring instruments for warning up for at least 30 minutes before starting adjustments.
(5) If the receive or input signal is not specified, use the most appropriate signal for adjustment.
(6) Never touch the parts (such as variable resistors, transformers and condensers) not shown in the adjustment items of this service adjustment.

4.2 PRESET SETTING BEFORE ADJUSTMENTS

Unless otherwise specified in the adjustment items, preset the following functions with the REMOTE CONTROL UNIT.

Setting item	Settings
VIDEO STATUS	STANDARD
Picture adjustments	00
COLOR TEMPERATURE	LOW
COLOR MANAGEMENT	ON
DYNAMIC GAMMA	ON
ADVANCED SMART PICTURE	OFF
DIGITAL VNR	OFF
MPEG NR	OFF
NATURAL CINEMA	AUTO
Sound adjustments	00
A.H.S.+	OFF
MaxxBass	OFF
SMART SOUND	OFF
ASPECT	FULL

4.3 MEASURING INSTRUMENT AND FIXTURES

- Oscilloscope
- Signal generator (Pattern generator) [NTSC / 525i / 525p / 750p / 1125i]
- TV audio multiplex signal generator
- Remote control unit

4.4 ADJUSTMENT ITEMS

■ **FOCUS**
- LENS FOCUS adjustment

■ **DRIVE CIRCUIT**
- DRIVE CONVERGENCE adjustment
- DRIVE CENTER POSITION adjustment

■ **VIDEO CIRCUIT**
- WHITE BALANCE (HIGHLIGHT) adjustment

■ **MTS CIRCUIT**
- MTS INPUT LEVEL adjustment
- MTS SEPARATION adjustment

4.5 BASIC OPERATION OF SERVICE MODE

4.5.1 HOW TO ENTER THE SERVICE MODE

(1) Set to **"0 minutes"** using the **[SLEEP TIMER]** key.

(2) While **"0 minutes"** is displayed, press the **[VIDEO STATUS]** key and **[DISPLAY]** key simultaneously, then enter the SERVICE MODE (Fig.1)

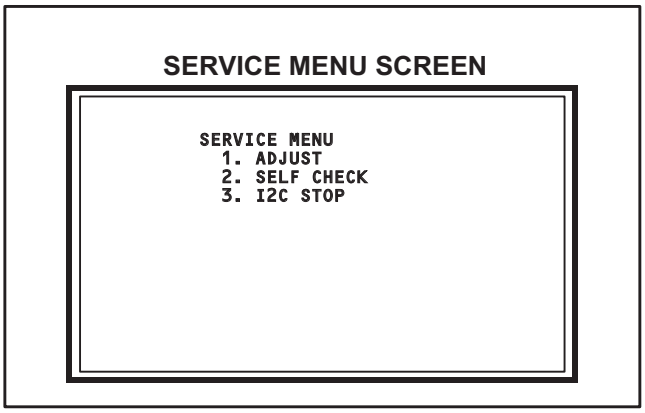

Fig.1

NOTE:

- Before entering the SERVICE MODE, confirm that the setting of **TV/CATV** switch of the REMOTE CONTROL UNIT is at the "TV" side and the setting of **VCR/DVD** switch is at the "**VCR**" side. If the switches have not been properly set, you cannot enter the SERVICE MODE.
- When a number key other than the **[1]** or **[9]** keys is pressed in the SERVICE MENU SCREEN, the other relevant screen may be displayed.
  This is not used in the adjustment procedure. Press the **[MENU]** key to return to the SERVICE MENU SCREEN.

4.5.2 HOW TO EXIT THE SERVICE MODE

Press the **[BACK]** key to exit the Service mode.

4.5.3 SERVICE MODE SELECT KEY LOCATION

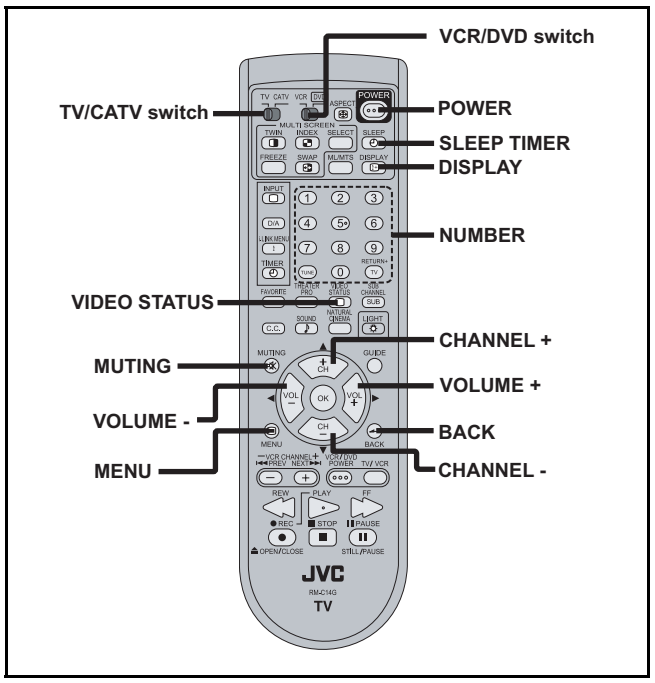

4.5.4 ADJUSTMENT MODE

This mode is used to adjust the VIDEO CIRCUIT and the MTS CIRCUIT.

4.5.4.1 HOW TO ENTER THE ADJUSTMENT MODE

When the SERVICE MENU SCREEN of SERVICE MODE is displayed, press **[1]** key to enter the **ADJUSTMENT MODE (Fig.2)**.

4.5.4.2 DESCRIPTION OF STATUS DISPLAY OF ADJUSTMENT MODE

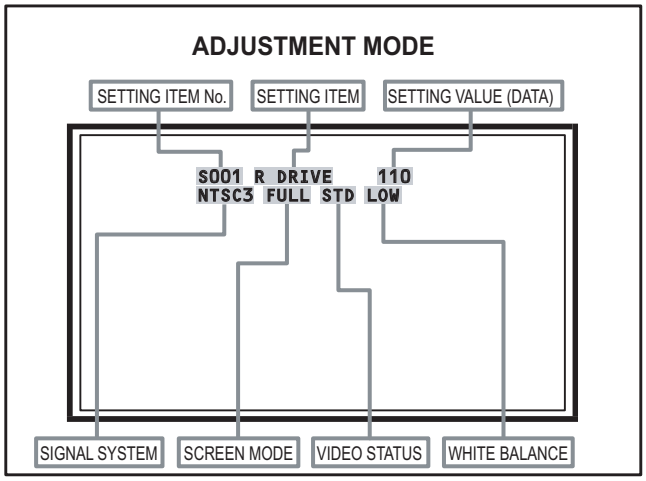

Fig.2

(1) SIGNAL SYSTEM

The signal displayed on the screen is displayed.

NTSC3	: 525i (Composite / S-video input)
525I	: 525i (Component input)
525P	: 525p
1125I6	: 1125i
750P6	: 750p
PCVGA	: PC (VGA)
PCXGA	: PC (XGA)
PCNG	: PC (except VGA/XGA)
H525I	: HDMI 525i
H525P	: HDMI 525p
H125I6	: HDMI 1125i
H125P6	: HDMI 1125p
H750P6	: HDMI 750p
D525I	: ATSC 525i
D525P	: ATSC 525p
D125I6	: ATSC 1125i
D750P	: ATSC 750p

(2) SCREEN MODE

State of the SCREEN SIZE or MULTI PICTURE is displayed.

SINGLE SCREEN

FULL	: FULL
1609	: CINEMA, CINEMA ZOOM
PANO	: PANORAMA, PANORAMA ZOOM
REGU	: REGULAR, SLIM

MULTI SCREEN

M2	: TWIN, FREEZE screen
M12	: INDEX screen

(3) VIDEO STATUS

STD : STANDARD
DYN : DYNAMIC
TH : THEATER
GAME : GAME

(4) WHITE BALANCE

HIGH : HIGH
LOW : LOW

(5) SETTING ITEM NAME

Setting item name are displayed. The setting item numbers to be displayed are listed below.

Item No.	Setting item
S001 - S009	Video system setting
T001 - T003	Audio system setting
M001 - M224	Main CPU system setting
F001 - F002	Drive system setting
D001	(NOT USED)
Z001	(NOT USED)

(6) SETTING ITEM NO.

Setting item numbers are displayed. For the setting item names to be displayed, refer to "Initial setting value of adjustment mode".

(7) SETTING VALUE (DATA)

The SETTING VALUE is displayed.

4.5.4.3 CHANGE AND MEMORY OF SETTING VALUE

■SELECTION OF SETTING ITEM

- **[CH+]** / **[CH-]** key.
  Change the setting items up/ down.

S001... ↔ T001... ↔ M001... ↔ F001... ↔ D001... ↔ Z001...

- **[SLEEP TIMER]** key.
  Switches to the next items.

S001 → T001 → M001... → F001... → D001 → Z001

■CHANGE OF SETTING VALUE (DATA)

- **[VOL+]** / **[VOL-]** key.
  Change the setting values up/down.

■MEMORY OF SETTING VALUE (DATA)

Changed setting value is memorized by pressing **[MUTING]** key.

4.5.5 RGB BOX PATTERN MODE

This mode is used to adjust the DRIVE CIRCUIT.

4.5.5.1 HOW TO ENTER THE RGB BOX PATTERN MODE

When the SERVICE MENU SCREEN of SERVICE MODE is displayed, press **[9]** key to enter the **RGB BOX PATTERN MODE (Fig3)**.

4.5.5.2 DESCRIPTION OF STATUS DISPLAY OF RGB BOX PATTERN MODE

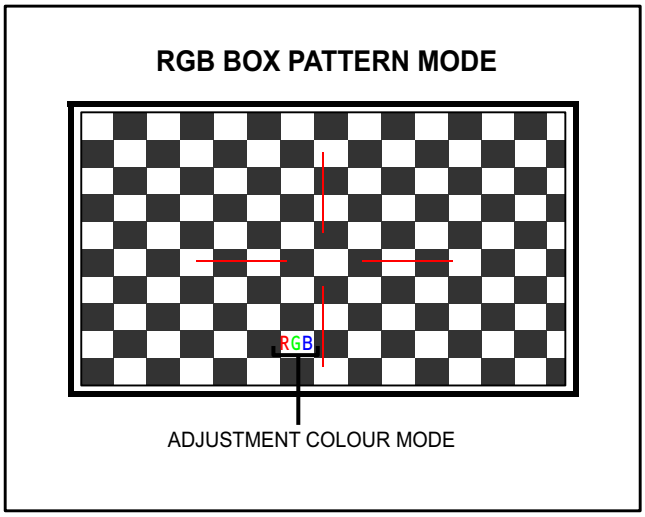

Fig.3

(1) RGB BOX PATTERN

The checkered pattern is displayed. White is a synthesis of RGB.

(2) ADJUSTMENT COLOR MODE

Presently selected ADJUSTMENT COLOR MODE is displayed.

■SELECTION OF SETTING ITEM

- **[CH+]** / **[CH-]** key.
  Move the selected RGB BOX PATTERN up/ down pixel by pixel.

- **[VOL+]** / **[VOL-]** key.
  Move the selected RGB BOX PATTERN left/ right pixel by pixel.

- **[SLEEP TIMER]** key.
  Adjusts the data reset.

- **[DISPLAY]** key.
  Adjusts the selected COLOR BOX PATTERN.

R → B → RGB

- **[BACK]** key.
  Returns to the SERVICE MENU SCREEN from the RGB BOX PATTERN MODE.

■MEMORY OF SETTING VALUE (DATA)

With the RGB BOX PATTERN MODE, the changed date is written in the MEMORY instantly.

4.6 INITIAL SETTING VALUES IN THE SERVICE MODE

- Perform fine-tuning based on the "initial values" using the remote control when in the Service mode.
- The "initial values" serve only as an indication rough standard and therefore the values with which optimal display can be achieved may be different from the default values. But, don't change the values that are not written in "ADJUSTMENT PROCEDURE". They are fixed values.

4.6.1 VIDEO SYSTEM SETTING

Item No.	Item	Variable range	Setting value
S001	R DRIVE	000 - 255	110
S002	G DRIVE	000 - 255	138
S003	B DRIVE	000 - 255	127
S004	RESREV	000 - 255	000
S005	RESREV	000 - 255	002
S006	RESREV	000 - 255	002
S007	RESREV	000 - 255	002
S008	RESREV	000 - 255	002
S009	RESREV	000 - 255	002

4.6.2 AUDIO SYSTEM SETTING

Item No.	Item	Variable range	Setting value
T001	INPLEVEL	000 - 015	007
T002	LOWSEPA	000 - 063	028
T003	HIGHSEPA	000 - 063	018

4.6.3 MAIN CPU SYSTEM SETTING (Fixed values)

Item No.	Item	Variable range	Setting value
M001	1E00	00 - FF	00
M002	1E01	00 - FF	00
M003	1E02	00 - FF	0A
M004	1E03	00 - FF	20
M005	1E04	00 - FF	10
M006	1E05	00 - FF	00
M007	1E06	00 - FF	00
M008	1E07	00 - FF	00
M009	1E08	00 - FF	00
M010	1E09	00 - FF	00
M011	1E0A	00 - FF	01
M012	1E0B	00 - FF	00
M013	1E0C	00 - FF	01
M014	1E0D	00 - FF	00
M015	1E0E	00 - FF	00
M016	1E0F	00 - FF	00
M017	1E10	00 - FF	01
M018	1E11	00 - FF	00
M019	1E12	00 - FF	00
M020	1E13	00 - FF	01
M021	1E14	00 - FF	01
M022	1E15	00 - FF	00
M023	1E16	00 - FF	00
M024	1E17	00 - FF	00
M025	1E18	00 - FF	00
M026	1E19	00 - FF	00
M027	1E1A	00 - FF	00
M028	1E1B	00 - FF	00
M029	1E1C	00 - FF	00
M030	1E1D	00 - FF	00
M031	1E1E	00 - FF	00
M032	1E1F	00 - FF	00
M033	1E20	00 - FF	00
M034	1E21	00 - FF	00
M035	1E22	00 - FF	00
M036	1E23	00 - FF	00
M037	1E24	00 - FF	00
M038	1E25	00 - FF	00
M039	1E26	00 - FF	00
M040	1E27	00 - FF	00
M041	1E28	00 - FF	00
M042	1E29	00 - FF	00
M043	1E2A	00 - FF	00
M044	1E2B	00 - FF	00
M045	1E2C	00 - FF	00
M046	1E2D	00 - FF	00
M047	1E2E	00 - FF	00
M048	1E2F	00 - FF	00
M049	1E30	00 - FF	00
M050	1E31	00 - FF	00
M051	1E32	00 - FF	00
M052	1E33	00 - FF	00
M053	1E34	00 - FF	00
M054	1E35	00 - FF	00
M055	1E36	00 - FF	02
M056	1E37	00 - FF	00
M057	1E38	00 - FF	01
M058	1E39	00 - FF	02
M059	1E3A	00 - FF	10
M060	1E3B	00 - FF	83
M061	1E3C	00 - FF	00
M062	1E3D	00 - FF	00
M063	1E3E	00 - FF	00
M064	1E3F	00 - FF	00
M065	1E40	00 - FF	00
M066	1E41	00 - FF	00
M067	1E42	00 - FF	00
M068	1E43	00 - FF	03
M069	1E44	00 - FF	03
M070	1E45	00 - FF	03
M071	1E46	00 - FF	3F
M072	1E47	00 - FF	01

Item No.	Item	Variable range	Setting value
M073	1E48	00 - FF	00
M074	1E49	00 - FF	00
M075	1E4A	00 - FF	00
M076	1E4B	00 - FF	00
M077	1E4C	00 - FF	00
M078	1E4D	00 - FF	00
M079	1E4E	00 - FF	00
M080	1E4F	00 - FF	00
M081	1E50	00 - FF	00
M082	1E51	00 - FF	00
M083	1E52	00 - FF	00
M084	1E53	00 - FF	00
M085	1E54	00 - FF	00
M086	1E55	00 - FF	00
M087	1E56	00 - FF	00
M088	1E57	00 - FF	00
M089	1E58	00 - FF	00
M090	1E59	00 - FF	00
M091	1E5A	00 - FF	00
M092	1E5B	00 - FF	00
M093	1E5C	00 - FF	00
M094	1E5D	00 - FF	00
M095	1E5E	00 - FF	00
M096	1E5F	00 - FF	00
M097	1E60	00 - FF	00
M098	1E61	00 - FF	00
M099	1E62	00 - FF	00
M100	1E63	00 - FF	00
M101	1E64	00 - FF	00
M102	1E65	00 - FF	00
M103	1E66	00 - FF	00
M104	1E67	00 - FF	00
M105	1E68	00 - FF	04
M106	1E69	00 - FF	03
M107	1E6A	00 - FF	02
M108	1E6B	00 - FF	00
M109	1E6C	00 - FF	00
M110	1E6D	00 - FF	00
M111	1E6E	00 - FF	00
M112	1E6F	00 - FF	00
M113	1E70	00 - FF	00
M114	1E71	00 - FF	00
M115	1E72	00 - FF	00
M116	1E73	00 - FF	00
M117	1E74	00 - FF	00
M118	1E75	00 - FF	00
M119	1E76	00 - FF	00
M120	1E77	00 - FF	00
M121	1E78	00 - FF	03
M122	1E79	00 - FF	00

Item No.	Item	Variable range	Setting value
M123	1E7A	00 - FF	00
M124	1E7B	00 - FF	00
M125	1E7C	00 - FF	00
M126	1E7D	00 - FF	00
M127	1E7E	00 - FF	01
M128	1E7F	00 - FF	00
M129	1E80	00 - FF	01
M130	1E81	00 - FF	00
M131	1E82	00 - FF	01
M132	1E83	00 - FF	00
M133	1E84	00 - FF	00
M134	1E85	00 - FF	00
M135	1E86	00 - FF	00
M136	1E87	00 - FF	00
M137	1E88	00 - FF	00
M138	1E89	00 - FF	00
M139	1E8A	00 - FF	00
M140	1E8B	00 - FF	00
M141	1E8C	00 - FF	00
M142	1E8D	00 - FF	00
M143	1E8E	00 - FF	00
M144	1E8F	00 - FF	00
M145	1E90	00 - FF	00
M146	1E91	00 - FF	00
M147	1E92	00 - FF	00
M148	1E93	00 - FF	00
M149	1E94	00 - FF	00
M150	1E95	00 - FF	00
M151	1E96	00 - FF	00
M152	1E97	00 - FF	00
M153	1E98	00 - FF	00
M154	1E99	00 - FF	00
M155	1E9A	00 - FF	01
M156	1E9B	00 - FF	00
M157	1E9C	00 - FF	03
M158	1E9D	00 - FF	00
M159	1E9E	00 - FF	00
M160	1E9F	00 - FF	00
M161	1EA0	00 - FF	00
M162	1EA1	00 - FF	00
M163	1EA2	00 - FF	01
M164	1EA3	00 - FF	00
M165	1EA4	00 - FF	00
M166	1EA5	00 - FF	00
M167	1EA6	00 - FF	00
M168	1EA7	00 - FF	00
M169	1EA8	00 - FF	00
M170	1EA9	00 - FF	00
M171	1EAA	00 - FF	00
M172	1EAB	00 - FF	00

Item No.	Item	Variable range	Setting value
M173	1EAC	00 - FF	0A
M174	1EAD	00 - FF	00
M175	1EAE	00 - FF	00
M176	1EAF	00 - FF	00
M177	1EB0	00 - FF	0A
M178	1EB1	00 - FF	00
M179	1EB2	00 - FF	01
M180	1EB3	00 - FF	00
M181	1EB4	00 - FF	00
M182	1EB5	00 - FF	00
M183	1EB6	00 - FF	00
M184	1EB7	00 - FF	00
M185	1EB8	00 - FF	00
M186	1EB9	00 - FF	00
M187	1EBA	00 - FF	00
M188	1EBB	00 - FF	00
M189	1EBC	00 - FF	00
M190	1EBD	00 - FF	00
M191	1EBE	00 - FF	00
M192	1EBF	00 - FF	00
M193	1EC0	00 - FF	00
M194	1EC1	00 - FF	00
M195	1EC2	00 - FF	01
M196	1EC3	00 - FF	00
M197	1EC4	00 - FF	00
M198	1EC5	00 - FF	00
M199	1EC6	00 - FF	00
M200	1EC7	00 - FF	00
M201	1EC8	00 - FF	00
M202	1EC9	00 - FF	00
M203	1ECA	00 - FF	00
M204	1ECB	00 - FF	00

Item No.	Item	Variable range	Setting value
M205	1ECC	00 - FF	02
M206	1ECD	00 - FF	00
M207	1ECE	00 - FF	00
M208	1ECF	00 - FF	00
M209	1ED0	00 - FF	10
M210	1ED1	00 - FF	00
M211	1ED2	00 - FF	00
M212	1ED3	00 - FF	00
M213	1ED4	00 - FF	00
M214	1ED5	00 - FF	00
M215	1ED6	00 - FF	00
M216	1ED7	00 - FF	00
M217	1ED8	00 - FF	00
M218	1ED9	00 - FF	00
M219	1EDA	00 - FF	00
M220	1EDB	00 - FF	00
M221	1EDC	00 - FF	00
M222	1EDD	00 - FF	00
M223	1EDE	00 - FF	00
M224	1EDF	00 - FF	00

4.6.4 DRIVE SYSTEM SETTING (Fixed values)

Item No.	Item	Variable range	Setting value
F001	DD	000 - 001	000
F002	RAM REF	000 - 001	000

4.6.5 NOT USED (Fixed values)

Item No.	Item	Variable range	Setting value
D001	RESREV	000 - 255	002

4.6.6 NOT USED (Fixed values)

Item No.	Item	Variable range	Setting value
Z001	RESREV	000 - 255	002

4.7 ADJUSTMENT PROCEDURE

4.7.1 FOCUS

Item	Measuring instrument	Test point	Adjustment part	Description
LENS FOCUS	Hexagon wrench (2.5mm)		FOCUS ring [PROJECTION LENS]	(1) Remove the SPEAKER GRILL and CENTER COVER. (2) Display the MENU screen. (3) Loosen the focus lock screw. (4) Adjust the **FOCUS ring** so that the center screen may become the best focus. (5) Fix the focus lock screw by using the Hexagon wrench. • On this occasion, hold the FOCUS ring with your left hand. (6) Confirm the whole focus of the best screen. (7) Install the CENTER COVER and SPEAKER GRILL.

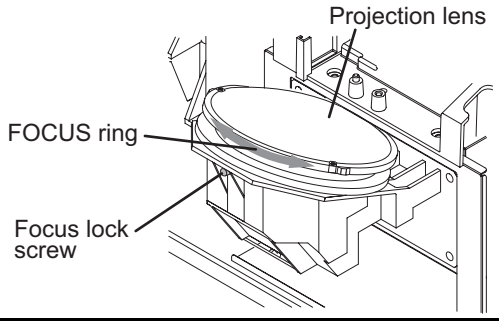

4.7.2 DRIVE CIRCUIT

<table>
<tr><th>Item</th><th>Measuring instrument</th><th>Test point</th><th>Adjustment part</th><th>Description</th></tr>
<tr><td>DRIVE CONVERGENCE</td><td>Remote control unit</td><td></td><td rowspan="2">[9.RGB BOX PATTERN]</td><td rowspan="2">(1) Set to "0 minutes" using the [SLEEP TIMER] key.
(2) Press the [VIDEO STATUS] key and [DISPLAY] key simultaneously, to enter the SERVICE MODE.
(3) Press the [9] key, to select "RGB BOX PATTERN MODE" from the SERVICE MODE.
(4) Set the adjustment color mode to "R" to set the red color adjustment mode.
(5) At Horizontal RGB box pattern, adjust the top edge position as same or less than 0.5 pixel hight as green.
(6) At Vertical RGB box pattern, adjust the right edge position as same or less than 0.5 pixel hight as green.
(7) Set the adjustment color mode to "B" to set the blue color adjustment mode.
(8) At Horizontal RGB box pattern, adjust the top edge position as same or less than 0.5 pixel hight as green.
(9) At Vertical RGB box pattern, adjust the right edge position as same or less than 0.5 pixel hight as green.
(10) Check to see that the cross pattern is white. If the cross pattern is not white, repeat the step 4. to 9. as abobe.
NOTE:
• Green is fixed. (It can not be removed.)
• With this adjustment mode, the changed data is written in the MEMORY instantly.</td></tr>
<tr><td colspan="3"> 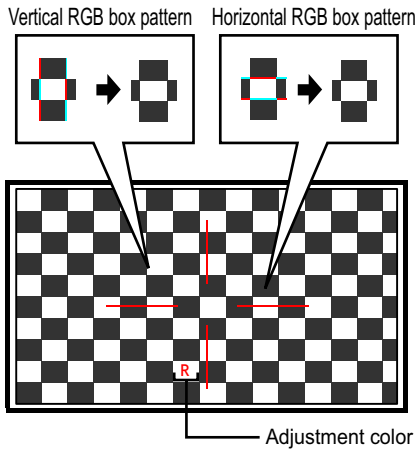
</td></tr>
<tr><td>DRIVE CENTER POSITION</td><td>Remote control unit

Signal generator</td><td></td><td rowspan="2">[9.RGB BOX PATTERN]</td><td rowspan="2">(1) Receive a center cross (or crosshatch) pattern.
(2) Set to "0 minutes" using the [SLEEP TIMER] key.
(3) Press the [VIDEO STATUS] key and [DISPLAY] key simultaneously, to enter the SERVICE MODE.
(4) Press the [9] key, to select "RGB BOX PATTERN MODE" from the SERVICE MODE.
(5) Set the adjustment color mode to "RGB" to set the display position adjustment mode.
(6) Adjust the top and the bottom width to make A and A" even.
(7) Adjust the left and the right width to make B and B" even.
NOTE:
• With this adjustment mode, the changed data is written in the MEMORY instantly.</td></tr>
<tr><td colspan="3"> 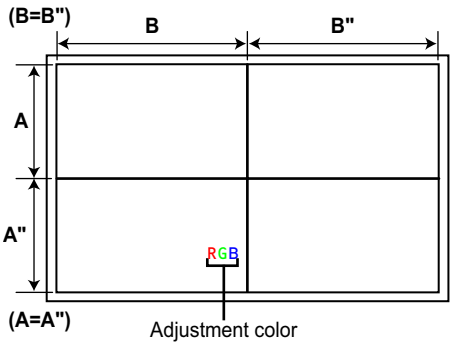
</td></tr>
</table>

4.7.3 VIDEO CIRCUIT

Item	Measuring instrument	Test point	Adjustment part	Description
WHITE BALANCE (HIGHLIGHT)	Remote control unit Signal generator		[1.ADJUST] S001: R DRIVE (Red drive) S002: G DRIVE (Green drive) S003: B DRIVE (Blue drive)	(1) Receive a NTSC 75% all white pattern. (2) Set "VIDEO STATUS" to **"STANDARD"**. (3) Set "ASPECT" to **"FULL"**. (4) Select "COLOR TEMPERATURE" to **"LOW"**. (5) Select **"1.ADJUST"** from the SERVICE MODE. (6) Adjust to keep one of **< S001 >** (Red drive), **< S002 >** (Green drive) or **< S003 >** (Blue drive) unchanged, then lower the other two so that the all-white screen is equally white throughout. **NOTE:** Set one or more of **< S001 >**, **< S002 >**, and **< S003 >** to **"138"**. (7) Check that white balance is properly tracked from low light to high light. If the white balance tracking is deviated, adjust to correct it. (8) Press the **[MUTING]** key to memoirze the set value.

4.7.4 MTS CIRCUIT

Item	Measuring instrument	Test point	Adjustment part	Description
MTS INPUT LEVEL	Remote control unit		[1.ADJUST] T001: INPLEVEL	(1) Receive any broadcast. (2) Select **"1.ADJUST"** from the SERVICE MODE. (3) Verify that the **< T001 >** (INPLEVEL) is set at its initial setting value. (4) Press the **[MUTING]** key to memorize the set value.
MTS SEPARATION	TV audio multiplex signal generator Oscilloscope Remote control unit	L OUT R OUT	[1.ADJUST] T002: LOWSEPA T003: HIGHSEPA	(1) Input the stereo L signal (300Hz) from the TV audio multiplex signal generator to the antenna terminal. (2) Connect an oscilloscope to **L OUT** pin of the **AUDIO OUT**, and display one cycle portion of the 300Hz signal. (3) Change the connection of the oscilloscope to **R OUT** pin of the **AUDIO OUT**, and enlarge the voltage axis. (4) Select **"1.ADJUST"** from the SERVICE MODE. (5) Set the initial setting value of the **< T002 >** (LOWSEPA). (6) Adjust the **< T002 >** so that the stroke element of the 300Hz signal will become minimum. (7) Press the **[MUTING]** key to memorize the set value. (8) Input the stereo R signal (3kHz) and change the connection of the oscilloscope to **L OUT** pin of the **AUDIO OUT**. (9) Similarly adjust **< T003 >** (HIGHSEPA). (10) Press the **[MUTING]** key to memorize the set value.
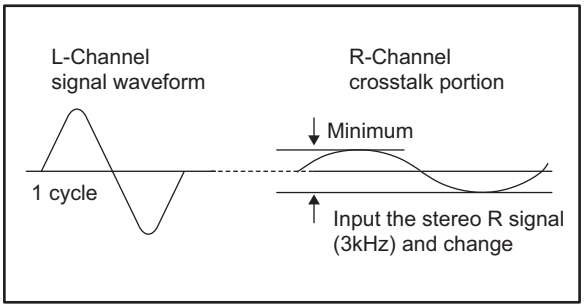				

SECTION 5
TROUBLESHOOTING

5.1 SELF CHECK FEATURE

5.1.1 OUTLINE

This unit comes with the "Self check" feature, which checks the operational state of the circuit and displays/saves it during failure.Diagnosis is performed when power is turned on, and information input to the main microcomputer is monitored at all time.Diagnosis is displayed in 2 ways via screen display and LED flashes. Failure detection is based on input state of I^2C bus and the various control lines connected to the main microcomputer.

5.1.2 HOW TO ENTER THE SELF CHECK MODE

Before entering the Self check mode, confirm that the setting of **TV/CATV** SW of the REMOTE CONTROL UNIT is at the **"TV"** side and the setting of **VCR/DVD** SW is at the **"VCR"** side. If the switches have not been properly set, you cannot enter the Self check mode.

(1) Set to "**0 minutes**" using the **[SLEEP TIMER]** key.
(2) While **"0 minutes"** is displayed, press the **[VIDEO STATUS]** key and **[DISPLAY]** key simultaneously, then enter the service mode.
(3) Press the **[2]** key (SELF CHECK) before the service mode screen disappears.
(4) Self check mode screen is displayed.
(5) Press the **[SLEEP TIMER]** key to enter Page 2 of the SELF CHECK MODE.
- When the **[RETURN+]** key pressed, the first page change screen.

NOTE:

When a number key other than the **[2]** key is pressed in the SERVICE MENU SCREEN, the other relevant screen may be displayed.
This is not used in the SELF CHECK. Press the **[MENU]** key to return to the SERVICE MENU SCREEN.

5.1.3 HOW TO EXIT THE SELF CHECK MODE

TO SAVE FAILURE HISTORY:

Turn off the power by unplugging the AC power cord plug when in the Self check mode.

TO CLEAR (RESET) FAILURE HISTORY:

Turn off the power by pressing the **[POWER]** key on the remote control unit when in the Self check mode.

5.1.4 FAILURE HISTORY

Failure history can be counted up to 9 times for each item. When the number exceeds 9, display will remain as 9. Failure history will be stored in the memory unless it has been deleted.

5.1.5 POINTS TO NOTE WHEN USING THE SELF CHECK FEATURE

In addition to circuit failures (abnormal operation), the following cases may also be diagnosed as "Abnormal" and displayed and counted as "NG".

(1) Temporary defective transmissions across circuits due to pulse interruptions
(2) Misalignment in the on/off timing of power for I^2C bus (VCC) when turning on/off the main power.

Diagnosis may be impeded if a large number of items are displayed as "NG". As such, start Self check check only after 3 seconds in the case of receivers and 5 seconds in the case of panels upon turning on the power. If recurrences are expected, ensure to clear (reset) the failure history and record the new diagnosis reults.

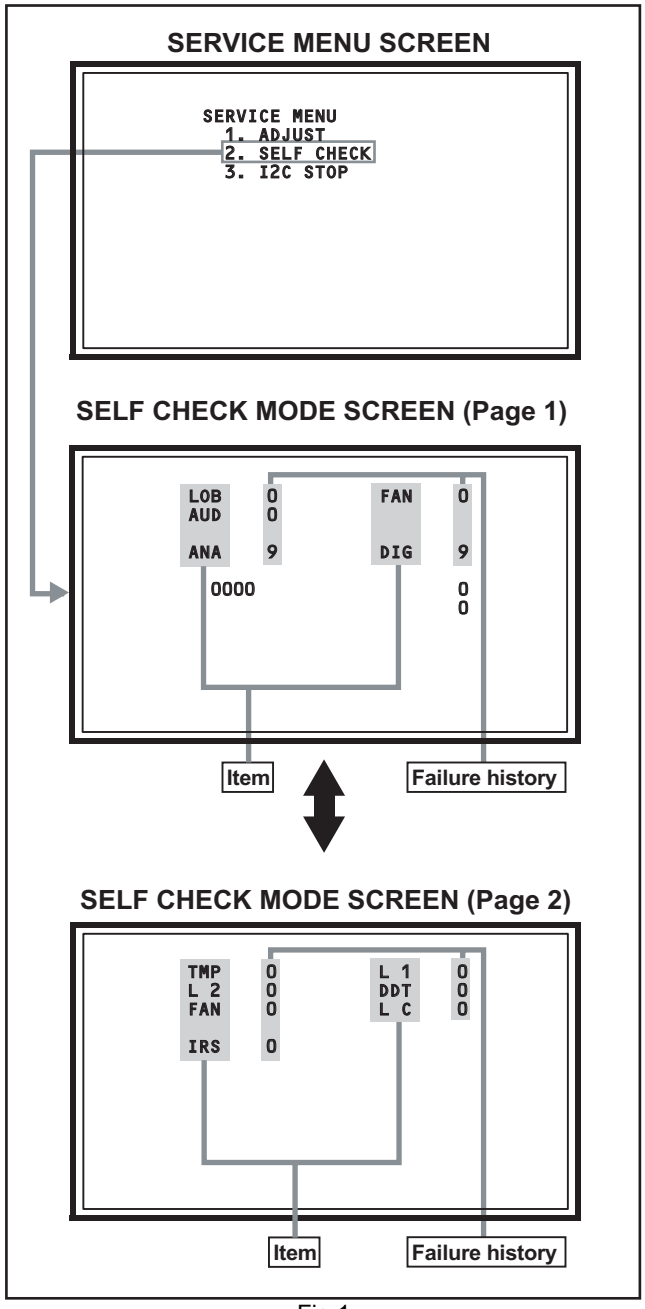

Fig.1

5.1.6 DETAILS

Self check is performed for the following items:

< Page 1 of screen >

Detection item	Display	Detection content	Diagnosis signal (line)	Detection timing
Low bias line short protection	LOB	Detection of the low bias line(5V/9V/12V) short. Q9821, Q9831, Q9861 **[POWER PWB]**	LB_PRO	Detection starts 3 seconds after the power is turned on. If error continues between 1000ms the power is turned off.
Fan lock	FAN	Not used	----	----
Audio	AUD	Not used	----	----
Devices on the ANALOG PWB and the TUNER PWB	ANA	Confirmation of reply of ACK signal which uses I^2C communication. IC101, IC102, IC281, IC381, IC601, IC606 **[ANALOG PWB]** IC061,TU001 **[TUNER PWB]**	SDA	If it checks whenever I^2C communication is performed and no reply of ACK signal an error will be counted.
Devices on the DIGITAL PWB	DIG	Not used	----	----

< Page 2 of screen >

Detection item	Display	Detection content	Diagnosis signal (line)	Detection timing
Temp. sensor	TMP	Confirmation of the abnormal inner cabinet temperature. (53°C) IC2001 **[THERMO PWB]**	TXD	It will count if the serial communication from a DD MICOM is always supervised and an error occurs.
Lamp does not light up	L1	Confirm that the lamp dose not light up. CNBCT1 **[DRIVE PWB]**	TXD	It will count if the serial communication from a DD MICOM is always supervised and an error occurs.
Lamp goes out	L2	Confirm that the lamp dose not goes out. CNBCT1 **[DRIVE PWB]**	TXD	It will count if the serial communication from a DD MICOM is always supervised and an error occurs.
Abnormal DD CPU circuit	DDT	Confirmation of the serial communication error between DRIVE PWB and DIGITAL PWB. IC3701 **[DRIVE PWB]**	TXD	It will count if the serial communication error is error occurs.
Fan lock	FAN	Confirmation of the lock signals outputting the operation(circuit) status of the cooling fan. IC8005 **[DRIVE PWB]**	TXD	It will count if the serial communication from a DD MICOM is always supervised and an error occurs.
Lamp cover open	LC	Confirmation of the interlock switch status for the lamp cover. S0861 **[LAMP COVER SW PWB]**	TXD	It will count if the serial communication from a DD MICOM is always supervised and an error occurs.
Abnormal of optical iris	IRS	Confirmation of the abnormal optical iris operation. IC5005 **[IRIS PWB]**	TXD	It will count if the serial communication from a DD MICOM is always supervised and an error occurs.

5.1.7 DISPLAY METHOD WHEN RASTER IS NOT AVAILABLE

In a state where a display screen does not appear due to the failure of this unit, the POWER LED (blue) and LAMP/PROGRAM LED (orange) can be flushing and display a trouble mode.
The factors in case the power is forcibly shut down at the time of failure are memorized and those are displayed.

Check item	Contents	Classifications	LED flash cycle	
			POWER LED (BLUE)	LAMP/ PROGRAM LED (ORANGE)
Fan lock (stop) for ATSC tuner	Detection of the Fan lock (stop). The ATSC TUNER MODULE detects it, and MAIN CPU receives the error command from the ATSC TUNER MODULE. CN110 [18]pin, [19]pin **[DIGITAL PWB]**	1	---	2 sec interval
Low bias line short protection	Detection of the low bias line(5V/9V/12V) short. Q9821, Q9831, Q9861 **[POWER PWB]**	2	---	1 sec interval
Lamp cover open	Detection of the interlock switch status for the lamp cover. (H = Abnormal) S0861 **[LAMP COVER SW PWB]**	3	0.1 sec interval Simultaneously	
Lamp goes out	Detection of lamp return (LAMP_RTN) signals output depending on the status of the lamp supply electric current monitored constantly within the lamp ballast unit. (H =Off) CNBCT1 **[DRIVE PWB]**	6	0.1 sec interval Simultaneously	
Lamp does not light up	Detection of lamp return (LAMP_RTN) signals output depending on the status of the lamp supply electric current monitored constantly within the lamp ballast unit. (H = Off) CNBCT1 **[DRIVE PWB]**	6	0.1 sec interval Simultaneously	
Fan lock (stop) for optical system	Detection of LOCK signals outputting the operation (circuit) status of the cooling fan. (H=Abnormal) IC8005 **[DRIVE PWB]**	4	0.5 sec interval Alternately	
Abnormal DD CPU circuit	Detection of serial communication error between MAIN DRIVE PWB and RECEIVER PWB. IC3701 **[DRIVE PWB]**	5	0.5 sec interval Alternately	
Abnormal D-ILA DEVICE temperature	Detection of abnormal inner cabinet temperature. (53°C) IC2001 **[THERMO PWB]**	7	0.5 sec interval Alternately	

EXPLANATION ON ACTION

If NG is detected on an item being diagnosed, turn off the power on this unit. As soon as the power goes off, turn on and off POWER LED and LAMP LED immediately. After the power is shut down, it becomes impossible to turn on the power until the power cable is either plugged in or unplugged from the AC outlet.

- When the error of [1] or [2] occur, [3], [4], [5], [6], [7] are no longer recognized.

JVC
Victor Company of Japan, Limited
ILA Display Category 12, 3-chome, Moriya-cho, Kanagawa-ku, Yokohama-city, Kanagawa-prefecture, 221-8528, Japan

(No.YA409)

Printed in Japan
VPT

JVC

SCHEMATIC DIAGRAMS

D-ILA PROJECTION TELEVISION

HD-56FH97, HD-56FN97, HD-61FH97, HD-61FN97

CD-ROM No.SML200609

BASIC CHASSIS
RA2

COPYRIGHT © 2006 Victor Company of Japan, Limited.

No.YA409
2006/9

HD-56FH97, HD-56FN97, HD-61FH97, HD-61FN97
STANDARD CIRCUIT DIAGRAM

■ NOTE ON USING CIRCUIT DIAGRAMS

1.SAFETY

The components identified by the⚠ symbol and shading are critical for safety. For continued safety replace safety ciritical components only with manufactures recommended parts.

2.SPECIFIED VOLTAGE AND WAVEFORM VALUES

The voltage and waveform values have been measured under the following conditions.

(1)Input signal	: Colour bar signal
(2)Setting positions of each knob/button and variable resistor	: Original setting position when shipped
(3)Internal resistance of tester	: DC 20kΩ/V
(4)Oscilloscope sweeping time	: H ⇒ 20μs / div
	: V ⇒ 5ms / div
	: Othters ⇒ Sweeping time is specified
(5)Voltage values	: All DC voltage values

∗ Since the voltage values of signal circuit vary to some extent according to adjustments, use them as reference values.

3.INDICATION OF PARTS SYMBOL [EXAMPLE]

● In the PW board : R1209 → R209

4.INDICATIONS ON THE CIRCUIT DIAGRAM

(1)Resistors

● Resistance value

No unit	: [Ω]
K	: [kΩ]
M	: [MΩ]

● Rated allowable power

No indication	: 1/16 [W]
Others	: As specified

● Type

No indication	: Carbon resistor
OMR	: Oxide metal film resistor
MFR	: Metal film resistor
MPR	: Metal plate resistor
UNFR	: Uninflammable resistor
FR	: Fusible resistor

∗ Composition resistor 1/2 [W] is specified as 1/2S or Comp.

(2)Capacitors

● Capacitance value

1 or higher	: [pF]
less than 1	: [μF]

● Withstand voltage

No indication	: DC50[V]
Others	: DC withstand voltage [V]
AC indicated	: AC withstand voltage [V]

∗ Electrolytic Capacitors
47/50[Example]: Capacitance value [μF]/withstand voltage[V]

● Type

No indication	: Ceramic capacitor
MM	: Metalized mylar capacitor
PP	: Polypropylene capacitor
MPP	: Metalized polypropylene capacitor
MF	: Metalized film capacitor
TF	: Thin film capacitor
BP	: Bipolar electrolytic capacitor
TAN	: Tantalum capacitor

(3)Coils

No unit	: [μH]
Others	: As specified

(4)Power Supply

∗ Respective voltage values are indicated

(5)Test point

(6)Connecting method

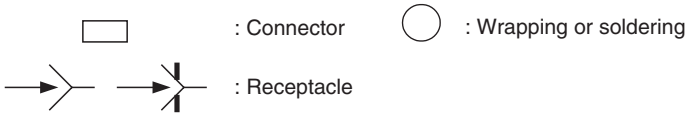

(7)Ground symbol

⊥ : LIVE side ground
⏚ : ISOLATED(NEUTRAL) side ground
⏚ : EARTH ground
▽ : DIGITAL ground

5.NOTE FOR REPAIRING SERVICE

This model's power circuit is partly different in the GND. The difference of the GND is shown by the LIVE : (⊥) side GND and the ISOLATED(NEUTRAL) : (⏚) side GND. Therefore, care must be taken for the following points.

(1)Do not touch the LIVE side GND or the LIVE side GND and the ISOLATED(NEUTRAL) side GND simultaneously. if the above caution is not respected, an electric shock may be caused. Therefore, make sure that the power cord is surely removed from the receptacle when, for example, the chassis is pulled out.

(2)Do not short between the LIVE side GND and ISOLATED(NEUTRAL) side GND or never measure with a measuring apparatus measure with a measuring apparatus (oscilloscope, etc.) the LIVE side GND and ISOLATED(NEUTRAL) side GND at the same time. If the above precaution is not respected, a fuse or any parts will be broken.

◆ **Since the circuit diagram is a standard one, the circuit and circuit constants may be subject to change for improvement without any notice.**

NOTE

◆ **Due improvement in performance, some part numbers show in the circuit diagram may not agree with those indicated in the part list.**
When ordering parts, please use the numbers that appear in the Parts List.

CONTENTS

SEMICONDUCTOR SHAPES 2-2
WIRING DIAGRAM 2-3
BLOCK DIAGRAM 2-5
CIRCUIT DIAGRAMS 2-7
TUNER PWB CIRCUIT DIAGRAM 2-7
ANALOG PWB CIRCUIT DIAGRAM 2-11
DIGITAL PWB CIRCUIT DIAGRAM 2-23
DRIVE PWB CIRCUIT DIAGRAM 2-53
POWER PWB CIRCUIT DIAGRAM 2-71
FRONT LED PWB CIRCUIT DIAGRAM 2-77
TEMP PWB CIRCUIT DIAGRAM 2-78
LAMP COVER PWB CIRCUIT DIAGRAM 2-79
REMOCON PWB CIRCUIT DIAGRAM 2-80
SIDE CONTROL PWB CIRCUIT DIAGRAM 2-81
SD CARD PWB CIRCUIT DIAGRAM 2-83
IRIS PWB CIRCUIT DIAGRAM 2-85
PATTERN DIAGRAMS 2-87
TUNER PWB PATTERN 2-87
IRIS PWB PATTERN 2-88
ANALOG PWB PATTERN 2-89
DIGITAL PWB PATTERN 2-93
DRIVE PWB PATTERN 2-97
POWER PWB PATTERN 2-101
FRONT LED PWB PATTERN 2-105
SIDE CONTROL PWB PATTERN 2-105
TEMP PWB PATTERN 2-106
LAMP COVER PWB PATTERN 2-106
REMOCON PWB PATTERN 2-106
SD CARD PWB PATTERN 2-106
VOLTAGE CHARTS 2-107
WAVEFORM 2-109

USING P.W. BOARD

PWB ASS'Y name	HD-56FH97	HD-56FN97	HD-61FH97	HD-61FN97
ANALOG P.W. BOARD	SRA-1015A-M2	SRA-1016A-M2	SRA-1015A-M2	SRA-1016A-M2
DRIVE P.W. BOARD	SRA-3004A-M2	←	←	←
REMOCON P.W. BOARD	SRA-8011A-M2	←	←	←
TEMP P.W. BOARD	SRA-8203A-M2	←	←	←
IRIS P.W. BOARD	SRA-8303A-M2	←	←	←
SD CARD P.W. BOARD	SRA-8505A-M2	←	←	←
POWER P.W. BOARD	SRA-9014A-M2	←	←	←
DIGITAL P.W. BOARD	SRA0D124A-M2	SRA0D127A-M2	SRA0D123A-M2	SRA0D126A-M2
SIDE CONTROL P.W. BOARD	SRA0L012A-M2	SRA0L013A-M2	SRA0L012A-M2	SRA0L013A-M2
FRONT LED P.W. BOARD	SRA0L113A-M2	←	←	←
LAMP COVER SW P.W. BOARD	SRA0L211A-M2	←	←	←
TUNER P.W. BOARD	SRA0R013A-M2	←	←	←

SEMICONDUCTOR SHAPES

TRANSISTOR

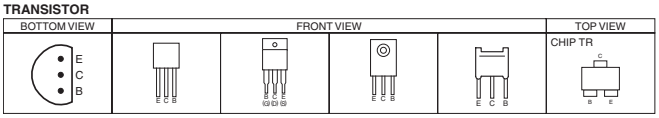

IC

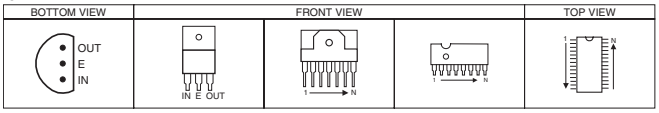

CHIP IC

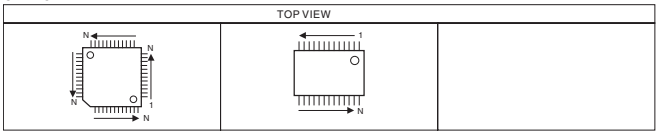

WIRING DIAGRAM

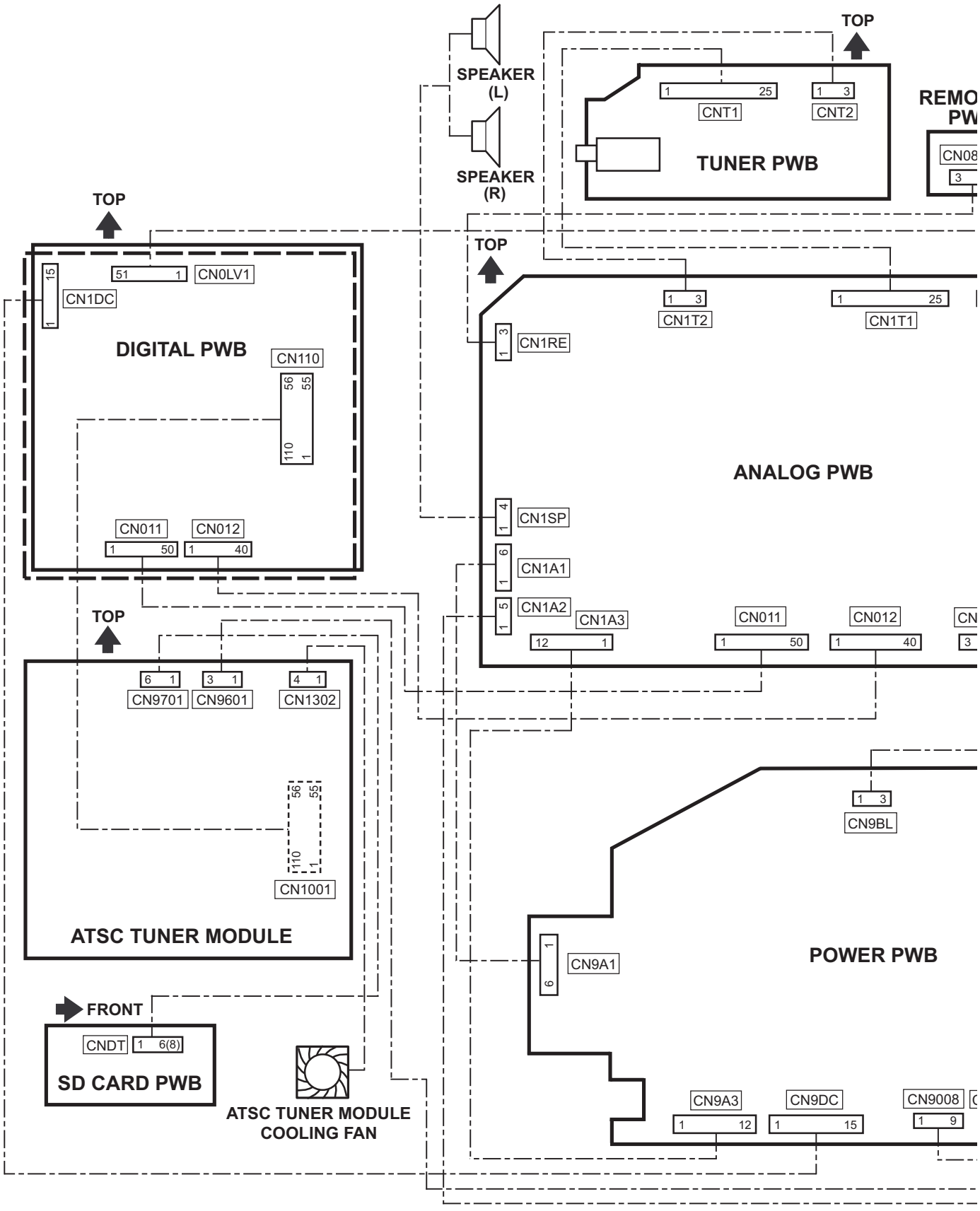

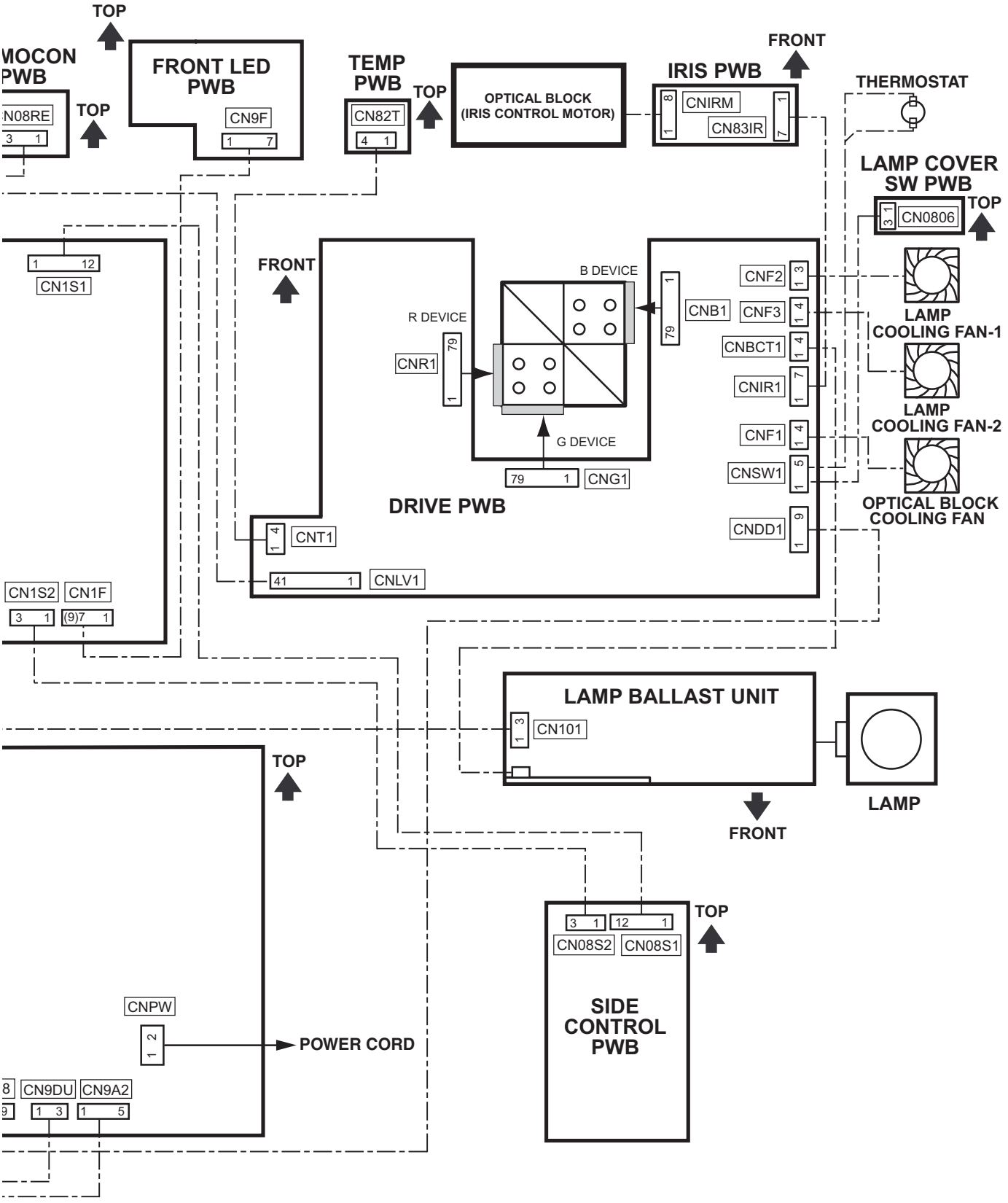
MOCON PWB
CN08RE
3 1
TOP
FRONT LED PWB
CN9F
1 7
TEMP PWB
CN82T
4 1
TOP
OPTICAL BLOCK (IRIS CONTROL MOTOR)
IRIS PWB
8 1
CNIRM
CN83IR
1 7
FRONT
THERMOSTAT
LAMP COVER SW PWB
3 1
CN0806
TOP
LAMP COOLING FAN-1
LAMP COOLING FAN-2
OPTICAL BLOCK COOLING FAN
1 12
CN1S1
FRONT
B DEVICE
R DEVICE
CNR1
79 1
CNB1
1 79
CNF2 1 3
CNF3 1 4
CNBCT1 1 4
CNIR1 1 7
CNF1 1 4
CNSW1 1 5
CNDD1 1 9
G DEVICE
79 1 CNG1
DRIVE PWB
1 4 CNT1
41 1 CNLV1
CN1S2 3 1
CN1F (9)7 1
LAMP BALLAST UNIT
1 3 CN101
LAMP
FRONT
TOP
CNPW
1 2
POWER CORD
8 CN9DU 9 1 3
CN9A2 1 5
3 1 CN08S2
12 1 CN08S1
TOP
SIDE CONTROL PWB

BLOCK DIAGRAM

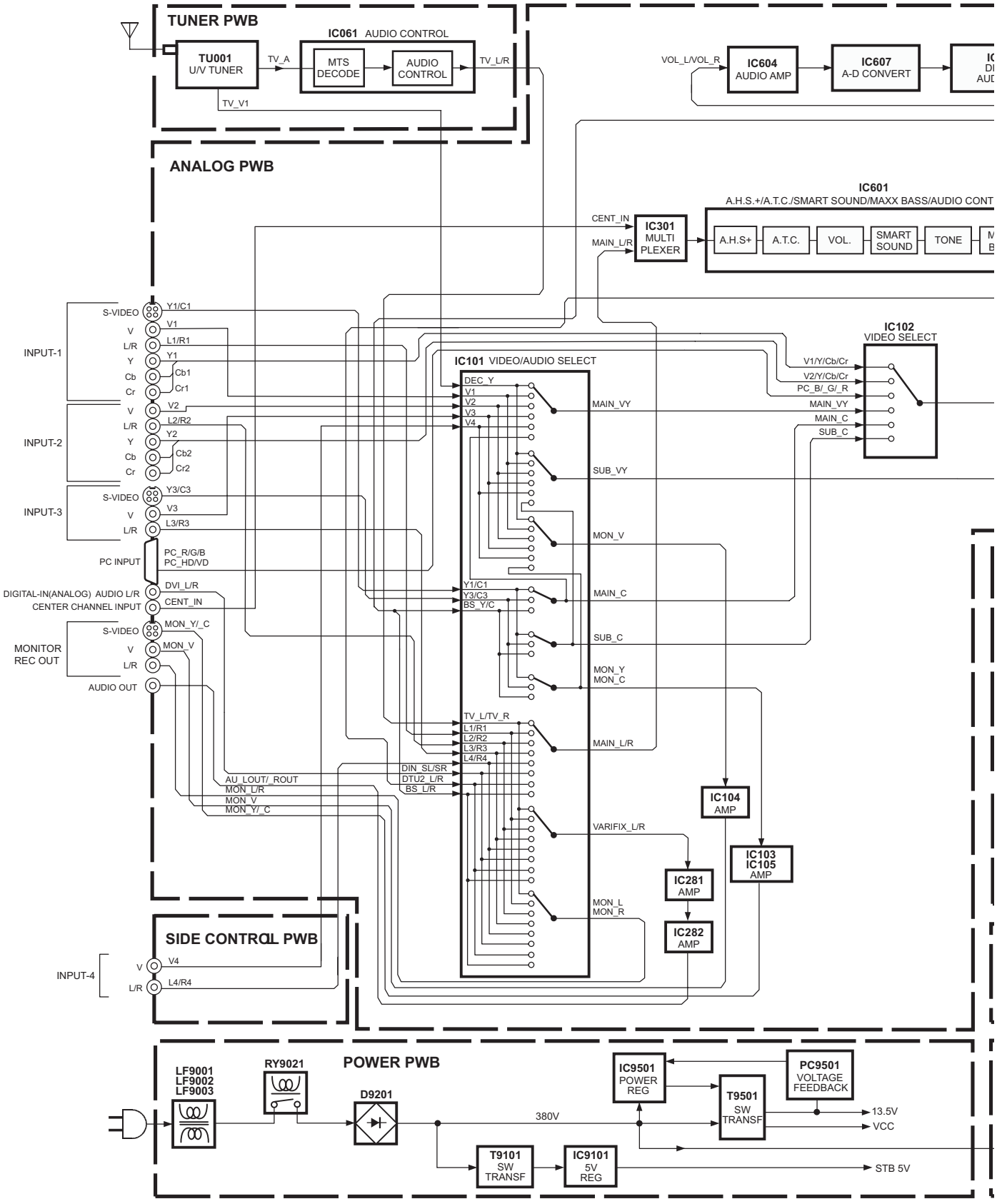

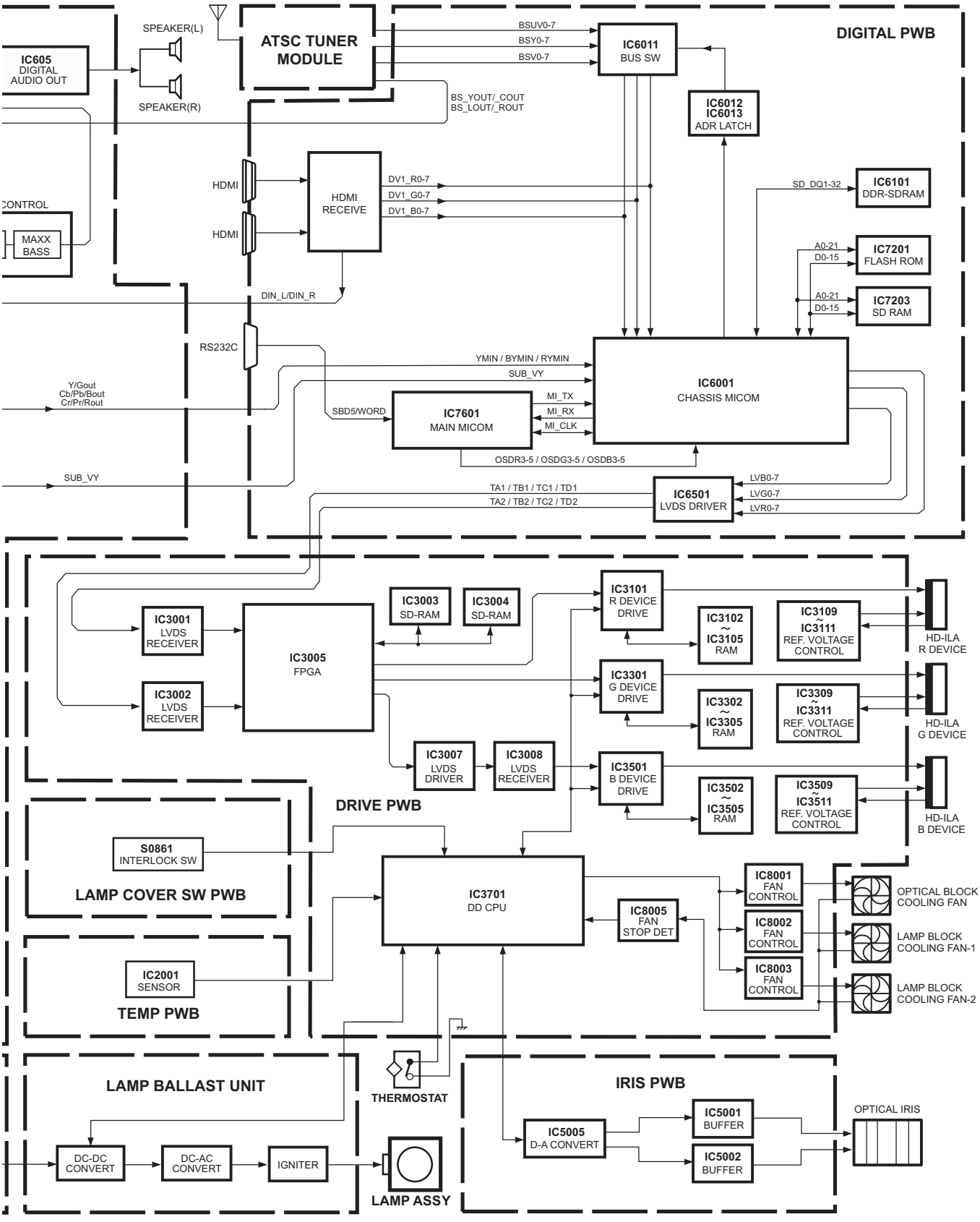
DIGITAL PWB
ATSC TUNER MODULE
SPEAKER(L)
SPEAKER(R)
IC605
DIGITAL AUDIO OUT
BSUV0-7
BSY0-7
BSV0-7
IC6011
BUS SW
BS_YOUT/_COUT
BS_LOUT/_ROUT
IC6012
IC6013
ADR LATCH
HDMI
HDMI
HDMI RECEIVE
DV1_R0-7
DV1_G0-7
DV1_B0-7
SD_DQ1-32
IC6101
DDR-SDRAM
CONTROL
MAXX BASS
A0-21
D0-15
IC7201
FLASH ROM
A0-21
D0-15
IC7203
SD RAM
DIN_L/DIN_R
RS232C
YMIN / BYMIN / RYMIN
SUB_VY
IC6001
CHASSIS MICOM
Y/Gout
Cb/Pb/Bout
Cr/Pr/Rout
SBD5/WORD
IC7601
MAIN MICOM
MI_TX
MI_RX
MI_CLK
OSDR3-5 / OSDG3-5 / OSDB3-5
SUB_VY
TA1 / TB1 / TC1 / TD1
TA2 / TB2 / TC2 / TD2
IC6501
LVDS DRIVER
LVB0-7
LVG0-7
LVR0-7
IC3001
LVDS RECEIVER
IC3002
LVDS RECEIVER
IC3005
FPGA
IC3003
SD-RAM
IC3004
SD-RAM
IC3101
R DEVICE DRIVE
IC3102 ~ IC3105
RAM
IC3109 ~ IC3111
REF. VOLTAGE CONTROL
HD-ILA R DEVICE
IC3301
G DEVICE DRIVE
IC3302 ~ IC3305
RAM
IC3309 ~ IC3311
REF. VOLTAGE CONTROL
HD-ILA G DEVICE
IC3007
LVDS DRIVER
IC3008
LVDS RECEIVER
IC3501
B DEVICE DRIVE
IC3502 ~ IC3505
RAM
IC3509 ~ IC3511
REF. VOLTAGE CONTROL
HD-ILA B DEVICE
DRIVE PWB
S0861
INTERLOCK SW
LAMP COVER SW PWB
IC3701
DD CPU
IC8005
FAN STOP DET
IC8001
FAN CONTROL
IC8002
FAN CONTROL
IC8003
FAN CONTROL
OPTICAL BLOCK COOLING FAN
LAMP BLOCK COOLING FAN-1
LAMP BLOCK COOLING FAN-2
IC2001
SENSOR
TEMP PWB
LAMP BALLAST UNIT
THERMOSTAT
IRIS PWB
IC5005
D-A CONVERT
IC5001
BUFFER
IC5002
BUFFER
OPTICAL IRIS
DC-DC CONVERT
DC-AC CONVERT
IGNITER
LAMP ASSY

CIRCUIT DIAGRAMS

TUNER CIRCUIT DIAGRAM (1/2) SHEET 1

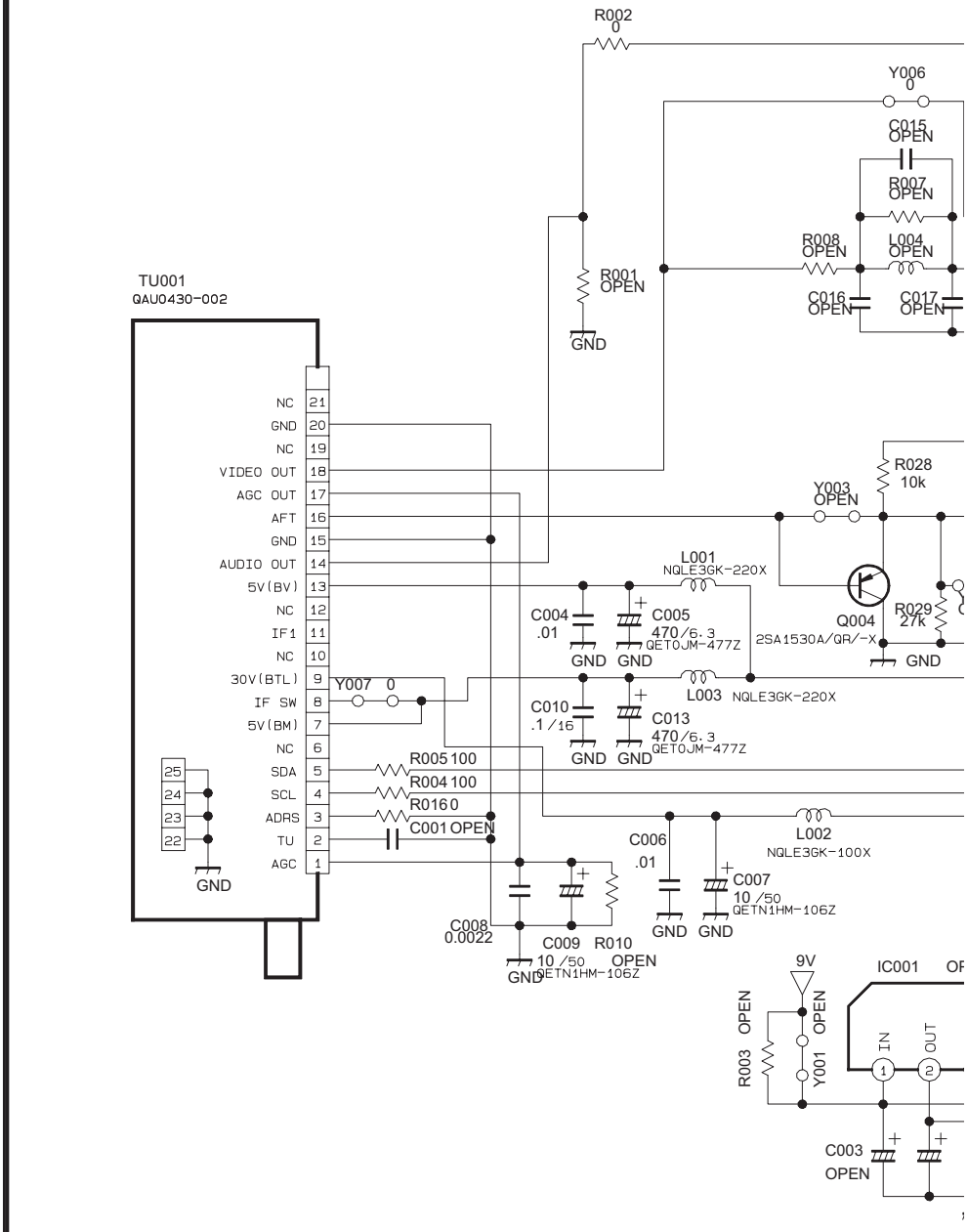

TUNER PWB ASS'Y (1/2)

SRA0R013A-M2

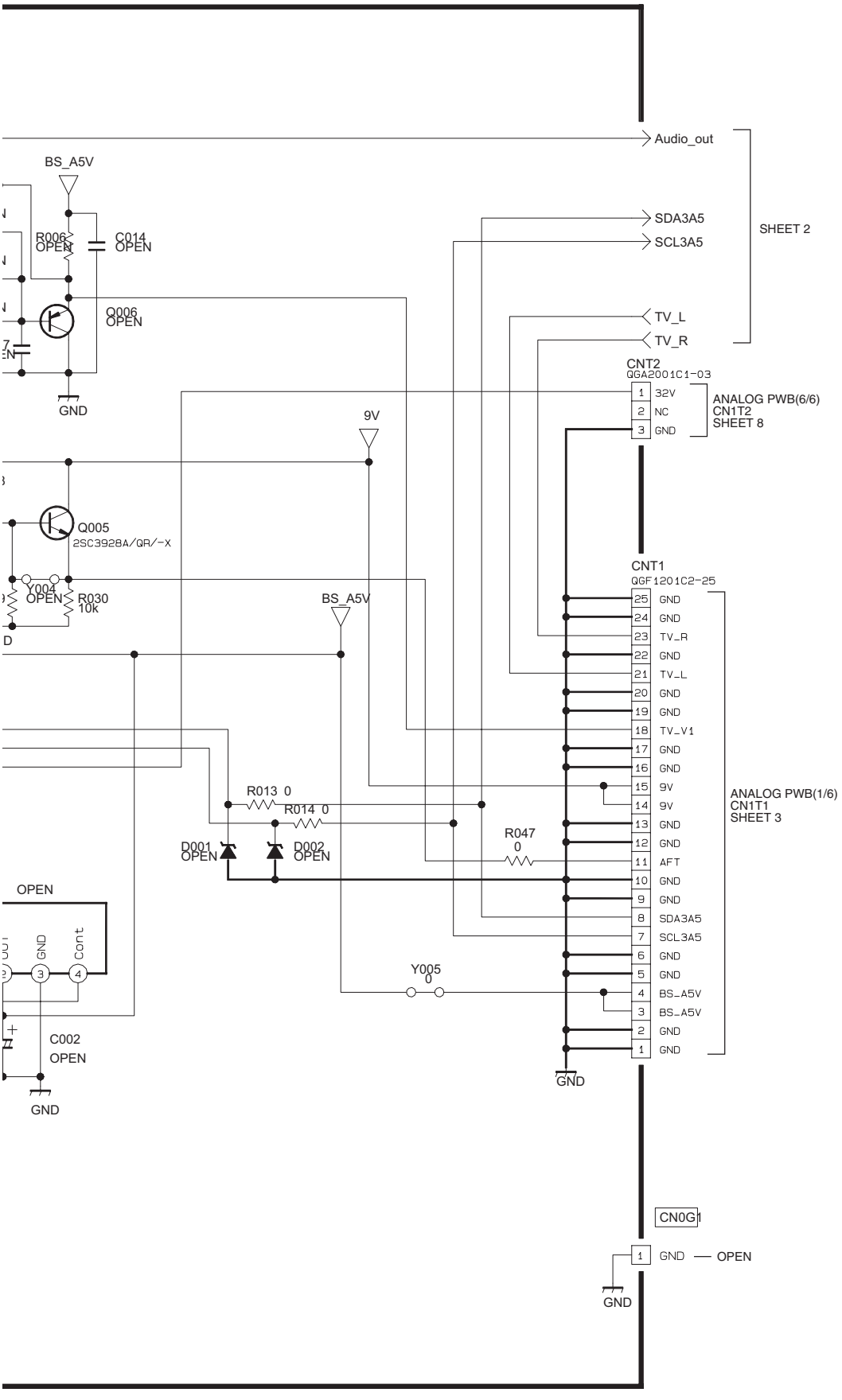

c30216001_0712_1/2_0.0

TUNER PWB ASS'Y (2/2)

SRA0R013A-M2

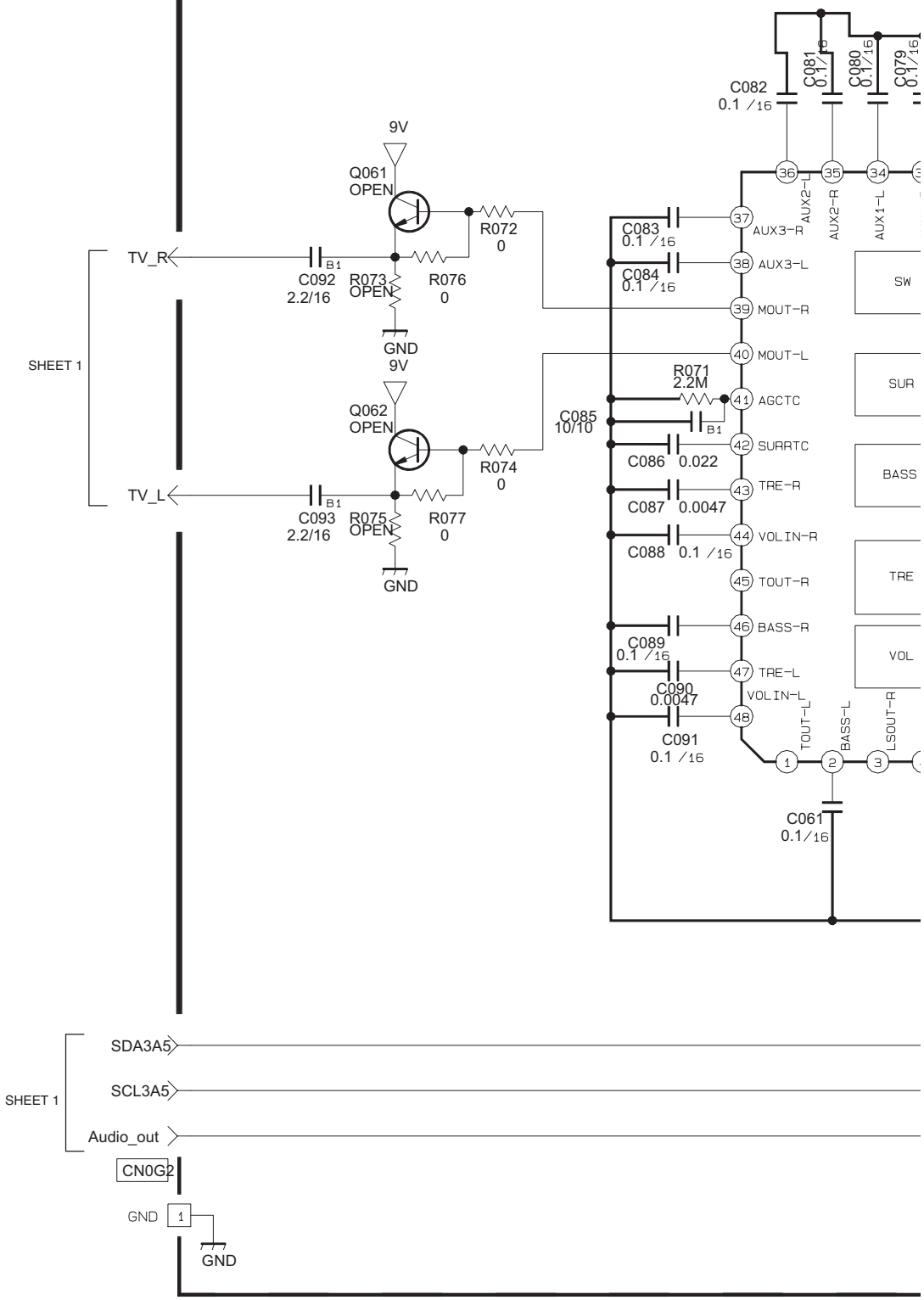

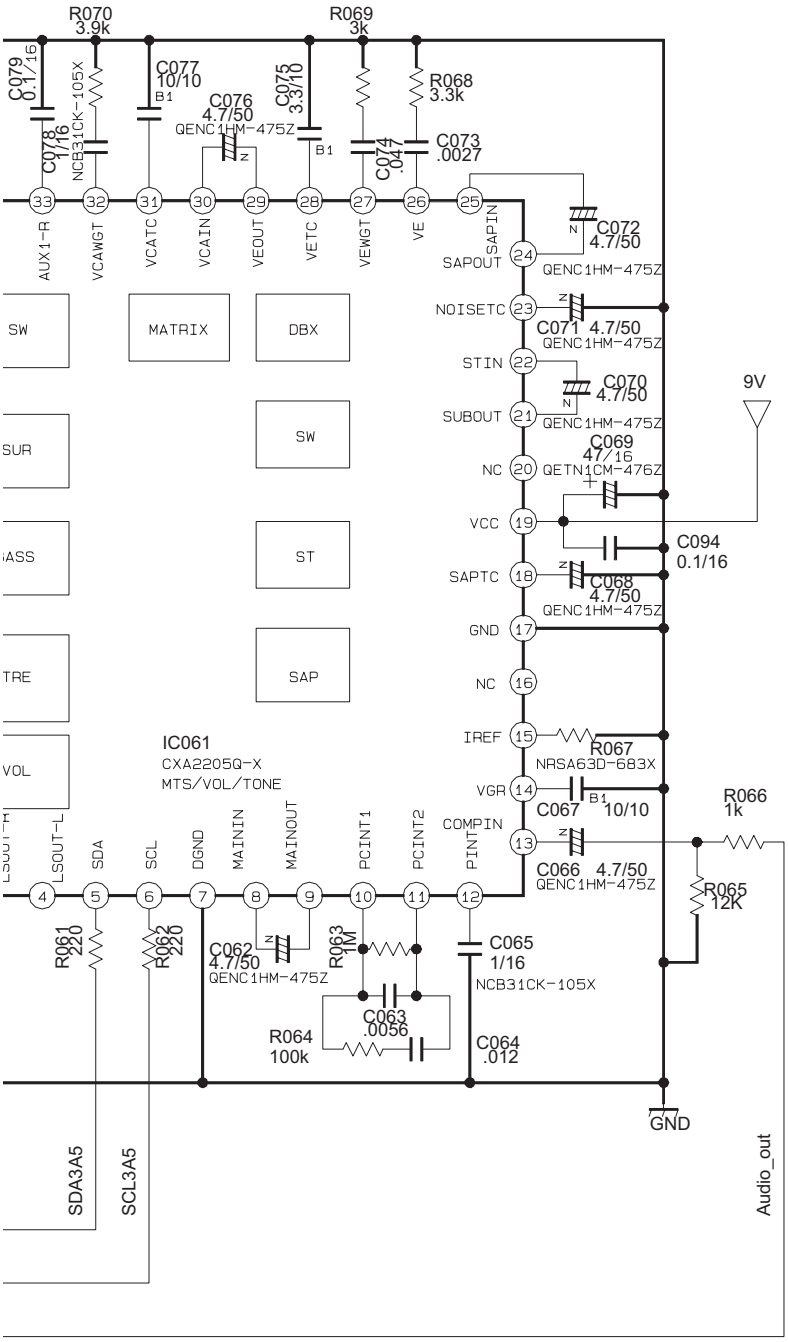

c30216001_0712_2/2_0.0

ANALOG PWB CIRCUIT DIAGRAM (1/6) SHEET3

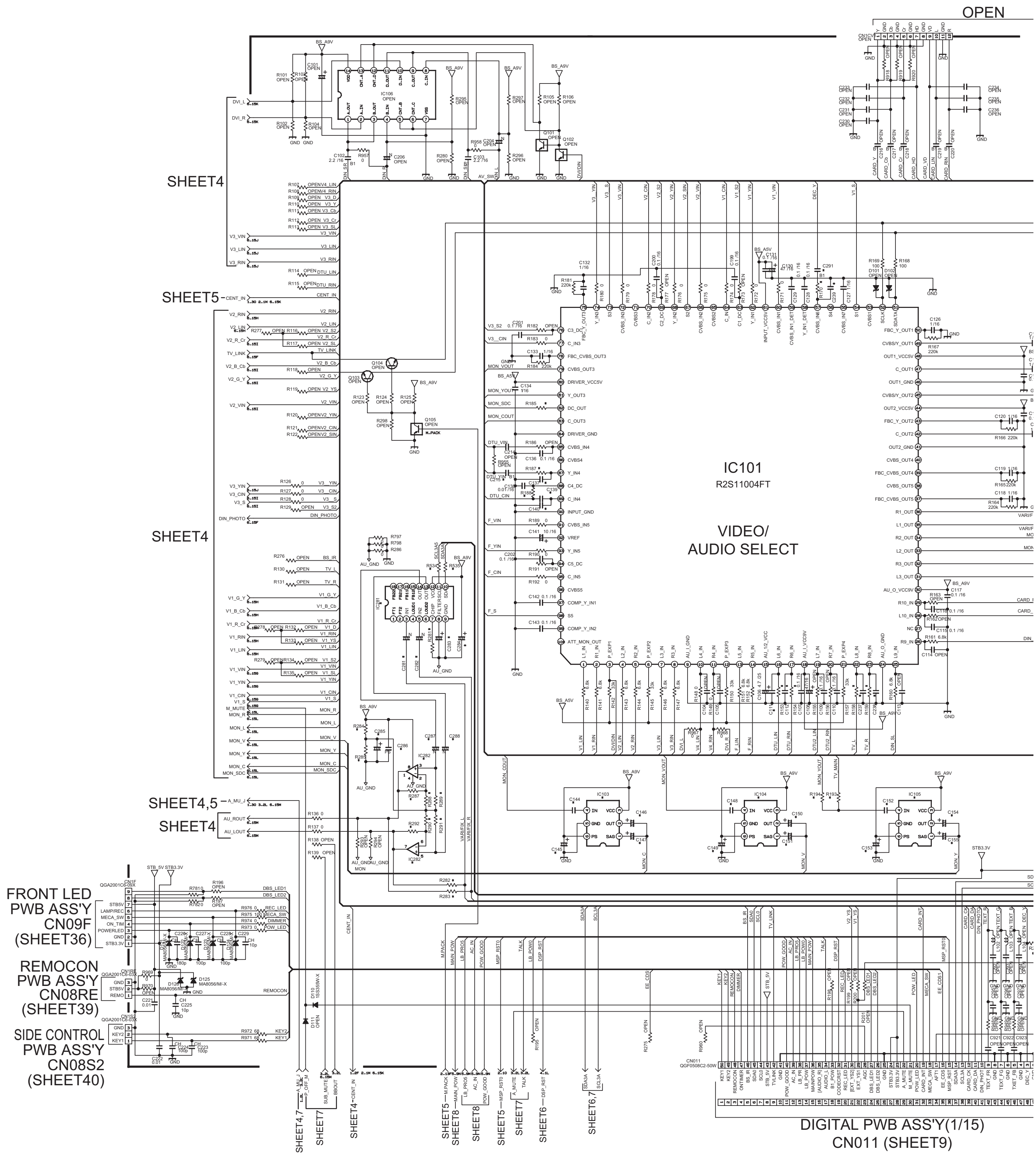

MONITOR OUT								
	HD-61G887A HD-56G887A HD-52G887A	HD-61G657A HD-56G657A HD-52G657A	HD-61G587A HD-52G587A	HD-61G567A HD-52G567A	HD-70FH97A HD-61FH97A HD-56FH97A HD-52FH97A	HD-70FN97A HD-61FN97A HD-56FN97A HD-52FN97A	HD-61FC97A HD-56FC97A	HD-56FM97A
	OLLC09896	OLLC10118	OLLC10118 -02		OLLC10494	OLLC10494 -02		
IC103	OPEN	OPEN	OPEN	OPEN	MM1510XN-X	MM1510XN-X	MM1510XN-X	OPEN
IC104	OPEN	OPEN	OPEN	OPEN	MM1510XN-X	MM1510XN-X	MM1510XN-X	OPEN
IC105	OPEN	OPEN	OPEN	OPEN	MM1510XN-X	MM1510XN-X	MM1510XN-X	OPEN
C144	OPEN	OPEN	OPEN	OPEN	1/16	1/16	1/16	OPEN
C145	OPEN	OPEN	OPEN	OPEN	10/16	10/16	10/16	OPEN
C146	OPEN	OPEN	OPEN	OPEN	100/10	100/10	100/10	OPEN
C147	OPEN	OPEN	OPEN	OPEN	10/16	10/16	10/16	OPEN
C148	OPEN	OPEN	OPEN	OPEN	1/16	1/16	1/16	OPEN
C149	OPEN	OPEN	OPEN	OPEN	10/16	10/16	10/16	OPEN
C150	OPEN	OPEN	OPEN	OPEN	100/10	100/10	100/10	OPEN
C151	OPEN	OPEN	OPEN	OPEN	10/16	10/16	10/16	OPEN
C152	OPEN	OPEN	OPEN	OPEN	1/16	1/16	1/16	OPEN
C153	OPEN	OPEN	OPEN	OPEN	10/16	10/16	10/16	OPEN
C154	OPEN	OPEN	OPEN	OPEN	100/10	100/10	100/10	OPEN
C155	OPEN	OPEN	OPEN	OPEN	10/16	10/16	10/16	OPEN
R185	OPEN	OPEN	OPEN	OPEN	0	0	0	OPEN
R194	OPEN	OPEN	OPEN	OPEN	0	0	0	OPEN

VARIABLE AUDIO								
	HD-61G887A HD-56G887A HD-52G887A	HD-61G657A HD-56G657A HD-52G657A	HD-61G587A HD-52G587A	HD-61G567A HD-52G567A	HD-70FH97A HD-61FH97A HD-56FH97A HD-52FH97A	HD-70FN97A HD-61FN97A HD-56FN97A HD-52FN97A	HD-61FC97A HD-56FC97A	HD-56FM97A
	OLLC09896	OLLC10118	OLLC10118 -02		OLLC10494	OLLC10494 -02		
IC281	OPEN	OPEN	OPEN	OPEN	BD3869AF-X	BD3869AF-X	OPEN	OPEN
IC282	OPEN	OPEN	OPEN	OPEN	RC4558D-X	RC4558D-X	OPEN	OPEN
R281	OPEN	OPEN	OPEN	OPEN	0	0	OPEN	OPEN
R282	0	0	0	0	OPEN	OPEN	0	0
R283	0	0	0	0	OPEN	OPEN	0	0
R284	OPEN	OPEN	OPEN	OPEN	4.7k	4.7k	OPEN	OPEN
R285	OPEN	OPEN	OPEN	OPEN	4.7k	4.7k	OPEN	OPEN
R287	OPEN	OPEN	OPEN	OPEN	15k	15k	OPEN	OPEN
R288	OPEN	OPEN	OPEN	OPEN	15k	15k	OPEN	OPEN
R289	OPEN	OPEN	OPEN	OPEN	10k	10k	OPEN	OPEN
R290	OPEN	OPEN	OPEN	OPEN	15k	15k	OPEN	OPEN
R291	OPEN	OPEN	OPEN	OPEN	10k	10k	OPEN	OPEN
R292	OPEN	OPEN	OPEN	OPEN	15k	15k	OPEN	OPEN
R534	OPEN	OPEN	OPEN	OPEN	100	100	OPEN	OPEN
R535	OPEN	OPEN	OPEN	OPEN	100	100	OPEN	OPEN

VARIABLE AUDIO								
	HD-61G887A HD-56G887A HD-52G887A	HD-61G657A HD-56G657A HD-52G657A	HD-61G587A HD-52G587A	HD-61G567A HD-52G567A	HD-70FH97A HD-61FH97A HD-56FH97A HD-52FH97A	HD-70FN97A HD-61FN97A HD-56FN97A HD-52FN97A	HD-61FC97A HD-56FC97A	HD-56FM97A
	OLLC09896	OLLC10118	OLLC10118 -02		OLLC10494	OLLC10494 -02		
C281	OPEN	OPEN	OPEN	OPEN	4.7/16	4.7/16	OPEN	OPEN
C282	OPEN	OPEN	OPEN	OPEN	4.7/16	4.7/16	OPEN	OPEN
C283	OPEN	OPEN	OPEN	OPEN	22/25	22/25	OPEN	OPEN
C284	OPEN	OPEN	OPEN	OPEN	100/16	100/16	OPEN	OPEN
C285	OPEN	OPEN	OPEN	OPEN	47/16	47/16	OPEN	OPEN
C286	OPEN	OPEN	OPEN	OPEN	0.1/16	0.1/16	OPEN	OPEN
C287	OPEN	OPEN	OPEN	OPEN	4.7/16	4.7/16	OPEN	OPEN
C288	OPEN	OPEN	OPEN	OPEN	4.7/16	4.7/16	OPEN	OPEN

PC IN								
	HD-61G887A HD-56G887A HD-52G887A	HD-61G657A HD-56G657A HD-52G657A	HD-61G587A HD-52G587A	HD-61G567A HD-52G567A	HD-70FH97A HD-61FH97A HD-56FH97A HD-52FH97A	HD-70FN97A HD-61FN97A HD-56FN97A HD-52FN97A	HD-61FC97A HD-56FC97A	HD-56FM97A
	OLLC09896	OLLC10118	OLLC10118 -02		OLLC10494	OLLC10494 -02		
R228	0	OPEN	0	OPEN	0	0	OPEN	0
R229	0	OPEN	0	OPEN	0	0	OPEN	0
R245	0	OPEN	0	OPEN	0	0	OPEN	0
R246	0	OPEN	0	OPEN	0	0	OPEN	0
R247	0	OPEN	0	OPEN	0	0	OPEN	0
R588	0	OPEN	0	OPEN	0	0	OPEN	0
R589	0	OPEN	0	OPEN	0	0	OPEN	0
R590	0	OPEN	0	OPEN	0	0	OPEN	0
R591	0	OPEN	0	OPEN	0	0	OPEN	0
R592	0	OPEN	0	OPEN	0	0	OPEN	0
C186	OPEN	0.1/16	OPEN	0.1/16	OPEN	OPEN	0.1/16	OPEN
C188	OPEN	0.1/16	OPEN	0.1/16	OPEN	OPEN	0.1/16	OPEN
C190	OPEN	0.1/16	OPEN	0.1/16	OPEN	OPEN	0.1/16	OPEN

ANALOG PWB ASS'Y (1/6)

SRA-1015A-M2 [HD-56FH97, HD-61FH97]
SRA-1016A-M2 [HD-56FN97, HD-61FN97]

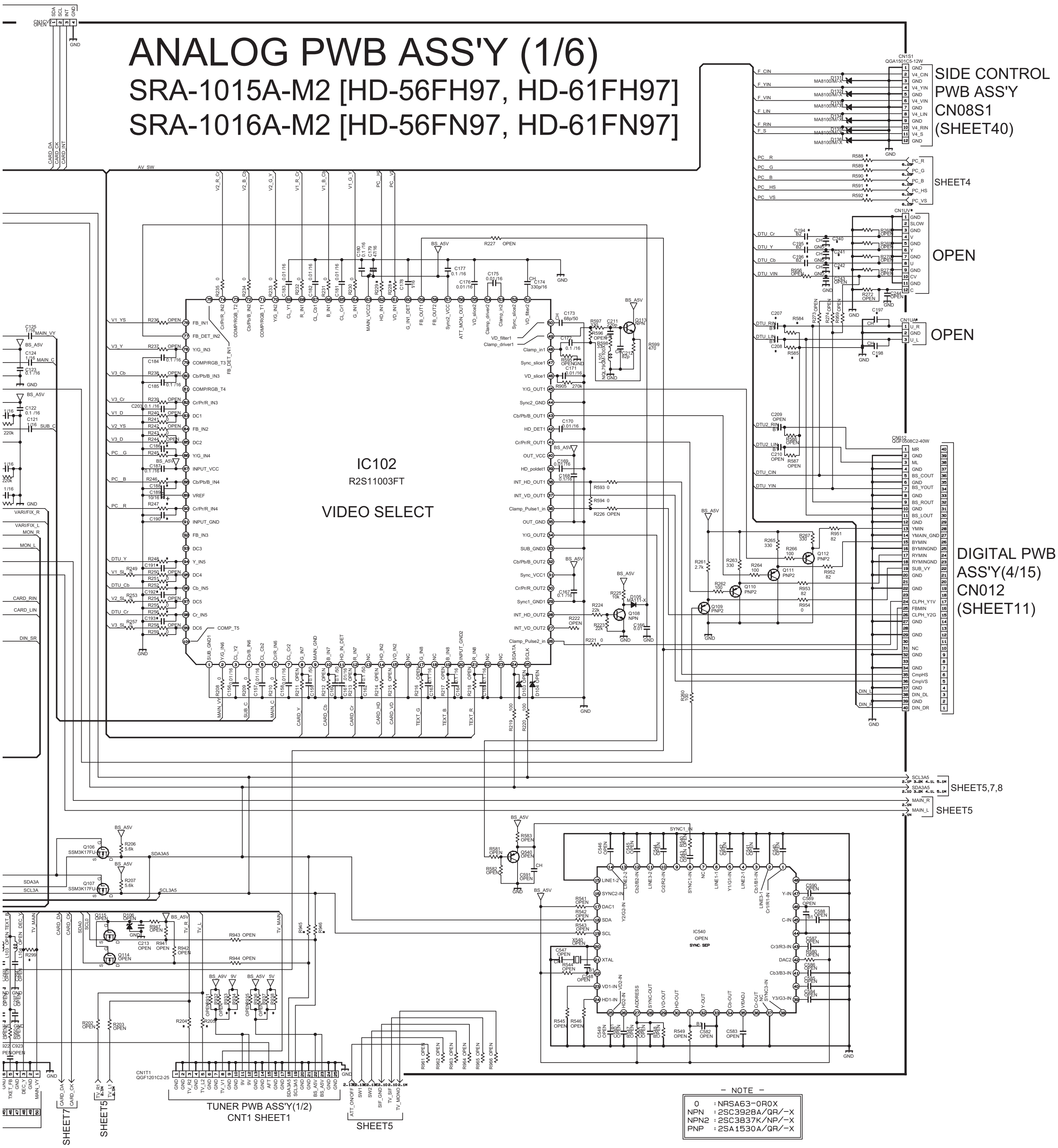

- NOTE -

0	:NRSA63-0R0X
NPN	:2SC3928A/QR/-X
NPN2	:2SC3837K/NP/-X
PNP	:2SA1530A/QR/-X

DIGITAL TUNER

	HD-61G887A HD-56G887A HD-52G887A	HD-61G657A HD-56G657A HD-52G657A	HD-61G587A HD-52G587A	HD-61G567A HD-52G567A	HD-70FH97A HD-61FH97A HD-56FH97A HD-52FH97A	HD-70FN97A HD-61FN97A HD-56FN97A HD-52FN97A	HD-61FC97A HD-56FC97A	HD-56FM97A
	OLLC09896	OLLC10118	OLLC10118 -02		OLLC10494	OLLC10494 -02		
CNUV	QGA2001C6-12X	QGA2001C6-12X	OPEN	OPEN	OPEN	OPEN	OPEN	OPEN
CNUA	QGA2001C6-03X	QGA2001C6-03X	OPEN	OPEN	OPEN	OPEN	OPEN	OPEN
R153	6.8k	6.8k	OPEN	OPEN	6.8k	6.8k	6.8k	OPEN
R154	6.8k	6.8k	OPEN	OPEN	6.8k	6.8k	6.8k	OPEN
R248	0	0	OPEN	OPEN	OPEN	OPEN	OPEN	OPEN
R252	0	0	OPEN	OPEN	OPEN	OPEN	OPEN	OPEN
R256	0	0	OPEN	OPEN	OPEN	OPEN	OPEN	OPEN
R584	10k	10k	OPEN	OPEN	10k	10k	10k	OPEN
R585	10k	10k	OPEN	OPEN	10k	10k	10k	OPEN
C111	OPEN	OPEN	0.1/16	0.1/16	OPEN	OPEN	OPEN	0.1/16
C112	OPEN	OPEN	0.1/16	0.1/16	OPEN	OPEN	OPEN	0.1/16
C191	OPEN	OPEN	0.1/16	0.1/16	0.1/16	0.1/16	0.1/16	0.1/16
C192	OPEN	OPEN	0.1/16	0.1/16	0.1/16	0.1/16	0.1/16	0.1/16
C193	OPEN	OPEN	0.1/16	0.1/16	0.1/16	0.1/16	0.1/16	0.1/16
C194	2.2/10	2.2/10	OPEN	OPEN	OPEN	OPEN	OPEN	OPEN
C195	2.2/10	2.2/10	OPEN	OPEN	OPEN	OPEN	OPEN	OPEN
C196	2.2/10	2.2/10	OPEN	OPEN	OPEN	OPEN	OPEN	OPEN
C207	2.2/16	2.2/16	OPEN	OPEN	2.2/16	2.2/16	2.2/16	OPEN
C208	2.2/16	2.2/16	OPEN	OPEN	2.2/16	2.2/16	2.2/16	OPEN

DIGITAL TUNER

	HD-61G887A HD-56G887A HD-52G887A	HD-61G657A HD-56G657A HD-52G657A	HD-61G587A HD-52G587A	HD-61G567A HD-52G567A	HD-70FH97A HD-61FH97A HD-56FH97A HD-52FH97A	HD-70FN97A HD-61FN97A HD-56FN97A HD-52FN97A	HD-61FC97A HD-56FC97A	HD-56FM97A
	OLLC09896	OLLC10118	OLLC10118 -02		OLLC10494	OLLC10494 -02		
R187	OPEN	OPEN	OPEN	OPEN	0	0	0	OPEN
R188	OPEN	OPEN	OPEN	OPEN	10k	10k	10k	OPEN
C215	OPEN	OPEN	OPEN	OPEN	10/10	10/10	10/10	OPEN
C137	0.1/16	0.1/16	0.1/16	0.1/16	OPEN	OPEN	OPEN	0.1/16
C139	OPEN	OPEN	OPEN	OPEN	1/16	1/16	1/16	OPEN
C140	0.1/16	0.1/16	0.1/16	0.1/16	OPEN	OPEN	OPEN	0.1/16
C240	10p	10p	OPEN	OPEN	OPEN	OPEN	OPEN	OPEN
C241	10p	10p	OPEN	OPEN	OPEN	OPEN	OPEN	OPEN
C242	10p	10p	OPEN	OPEN	OPEN	OPEN	OPEN	OPEN
C197	100p	100p	OPEN	100p	OPEN	OPEN	OPEN	OPEN
C198	100p	100p	OPEN	100p	OPEN	OPEN	OPEN	OPEN

ANALOG TUNER

	HD-61G887A HD-56G887A HD-52G887A	HD-61G657A HD-56G657A HD-52G657A	HD-61G587A HD-52G587A	HD-61G567A HD-52G567A	HD-70FH97A HD-61FH97A HD-56FH97A HD-52FH97A	HD-70FN97A HD-61FN97A HD-56FN97A HD-52FN97A	HD-61FC97A HD-56FC97A	HD-56FM97A
	OLLC09896	OLLC10118	OLLC10118 -02		OLLC10494	OLLC10494 -02		
R158	6.8k	6.8k	OPEN	6.8k	6.8k	6.8k	6.8k	OPEN
R159	6.8k	6.8k	OPEN	6.8k	6.8k	6.8k	6.8k	OPEN
R170	0	0	OPEN	0	0	0	0	OPEN
R204	0	0	OPEN	0	0	0	0	OPEN
R205	0	0	OPEN	0	0	0	0	OPEN
R299	0	0	OPEN	0	0	0	0	OPEN
R933	0	0	OPEN	0	0	0	0	OPEN
R934	0	0	OPEN	0	0	0	0	OPEN
R937	0	0	OPEN	0	0	0	0	OPEN
R938	0	0	OPEN	0	0	0	0	OPEN
R945	0	0	OPEN	0	0	0	0	OPEN
R946	0	0	OPEN	0	0	0	0	OPEN
C237	OPEN	OPEN	0.1/16	OPEN	OPEN	OPEN	OPEN	0.1/16
C238	OPEN	OPEN	0.1/16	OPEN	OPEN	OPEN	OPEN	0.1/16
C239	OPEN	OPEN	0.1/16	OPEN	OPEN	OPEN	OPEN	0.1/16
C291	10/10	10/10	OPEN	10/10	10/10	10/10	10/10	OPEN

c10447001_0214_1/6_0.0

ANALOG PWB CIRCUIT DIAGRAM (2/6) SHEET 4

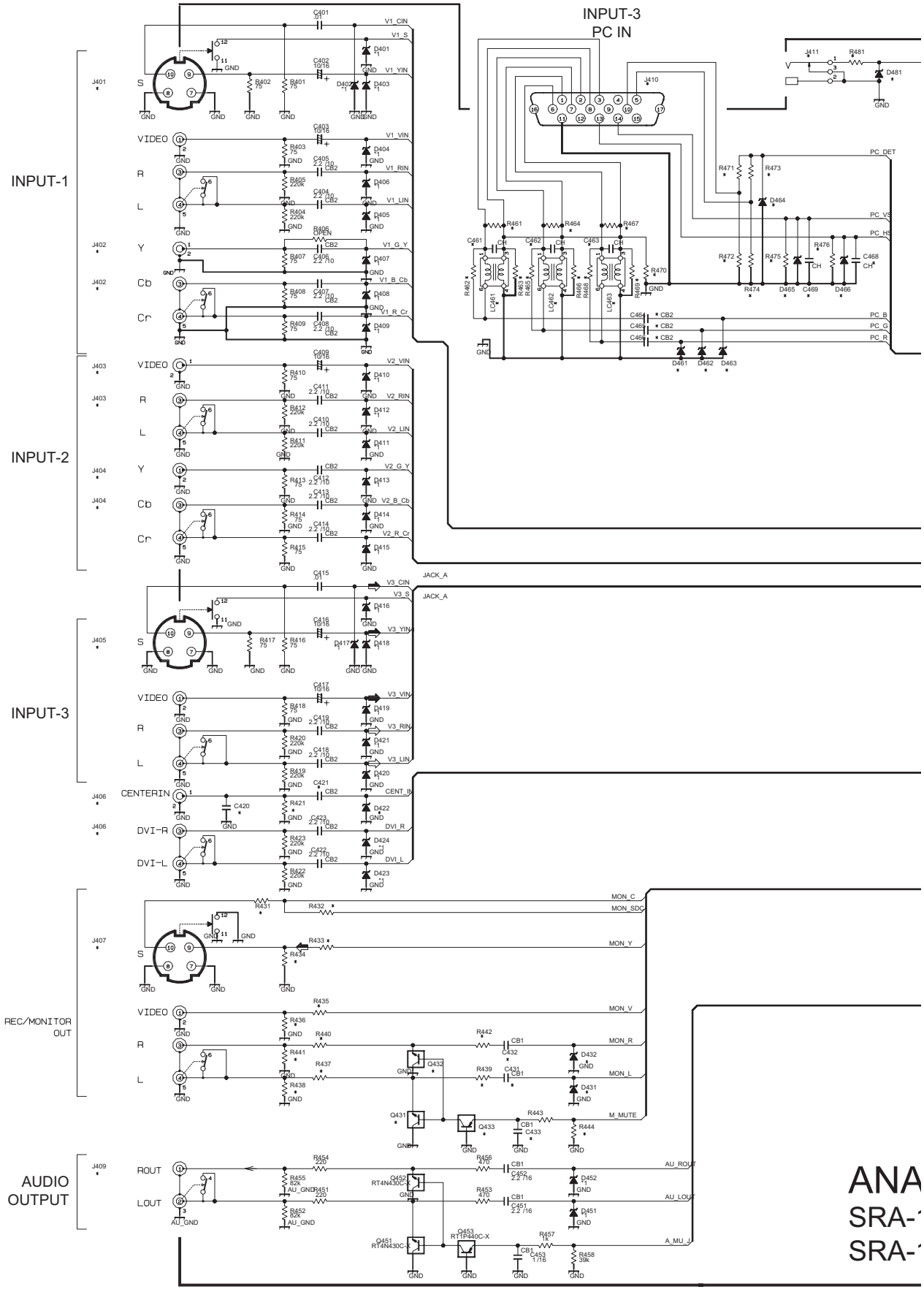

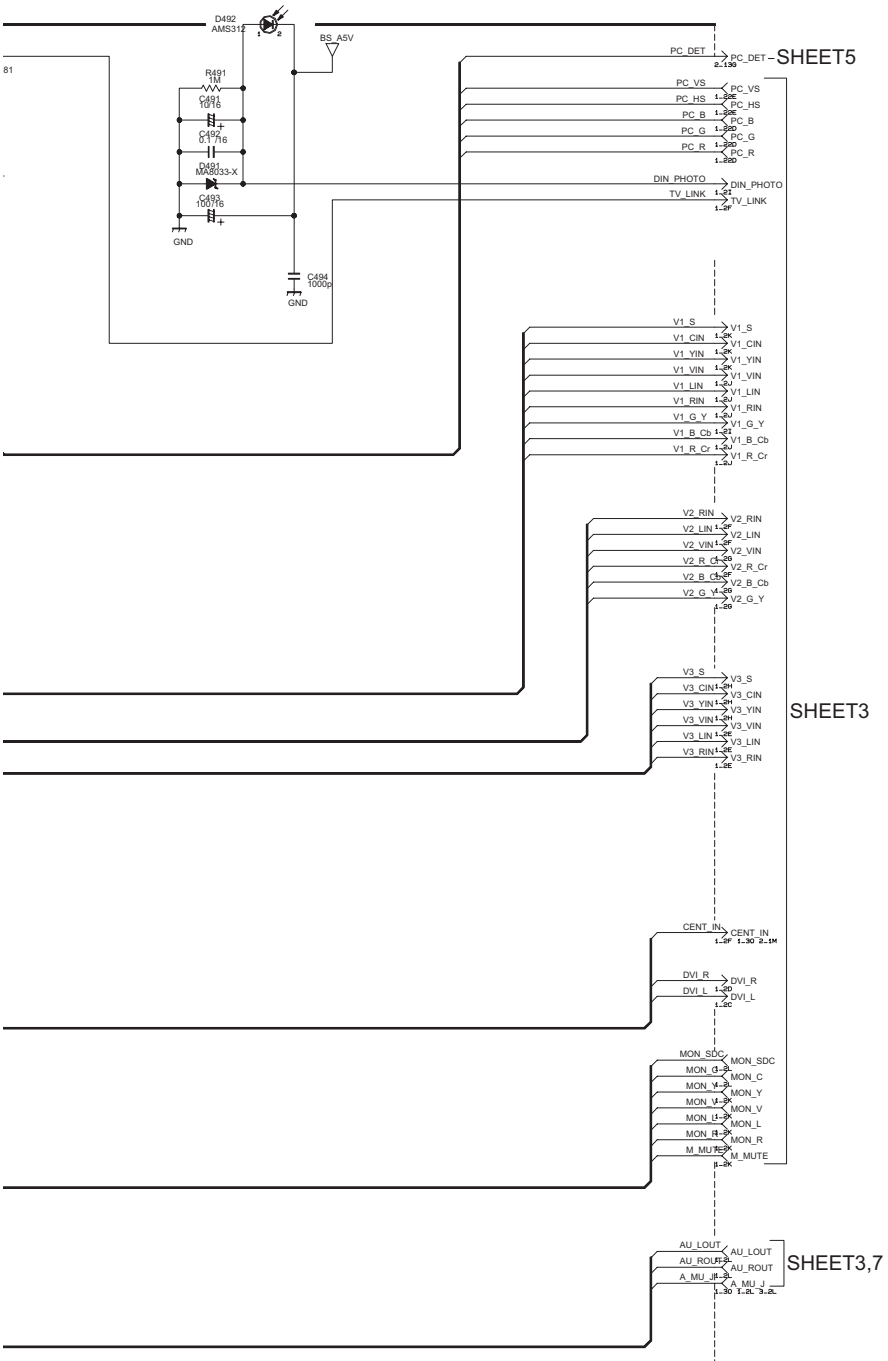

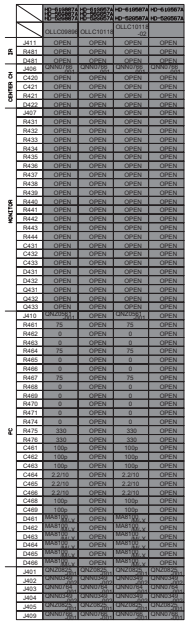

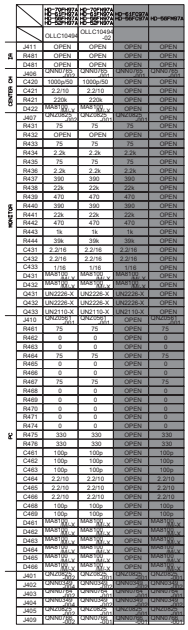

IALOG PWB ASS'Y (2/6)

A-1015A-M2 [HD-56FH97, HD-61FH97]

A-1016A-M2 [HD-56FN97, HD-61FN97]

c10447006_0214_6/6_0.0

ANALOG PWB ASS'Y (3/6)

SRA-1015A-M2 [HD-56FH97, HD-61FH97]
SRA-1016A-M2 [HD-56FN97, HD-61FN97]

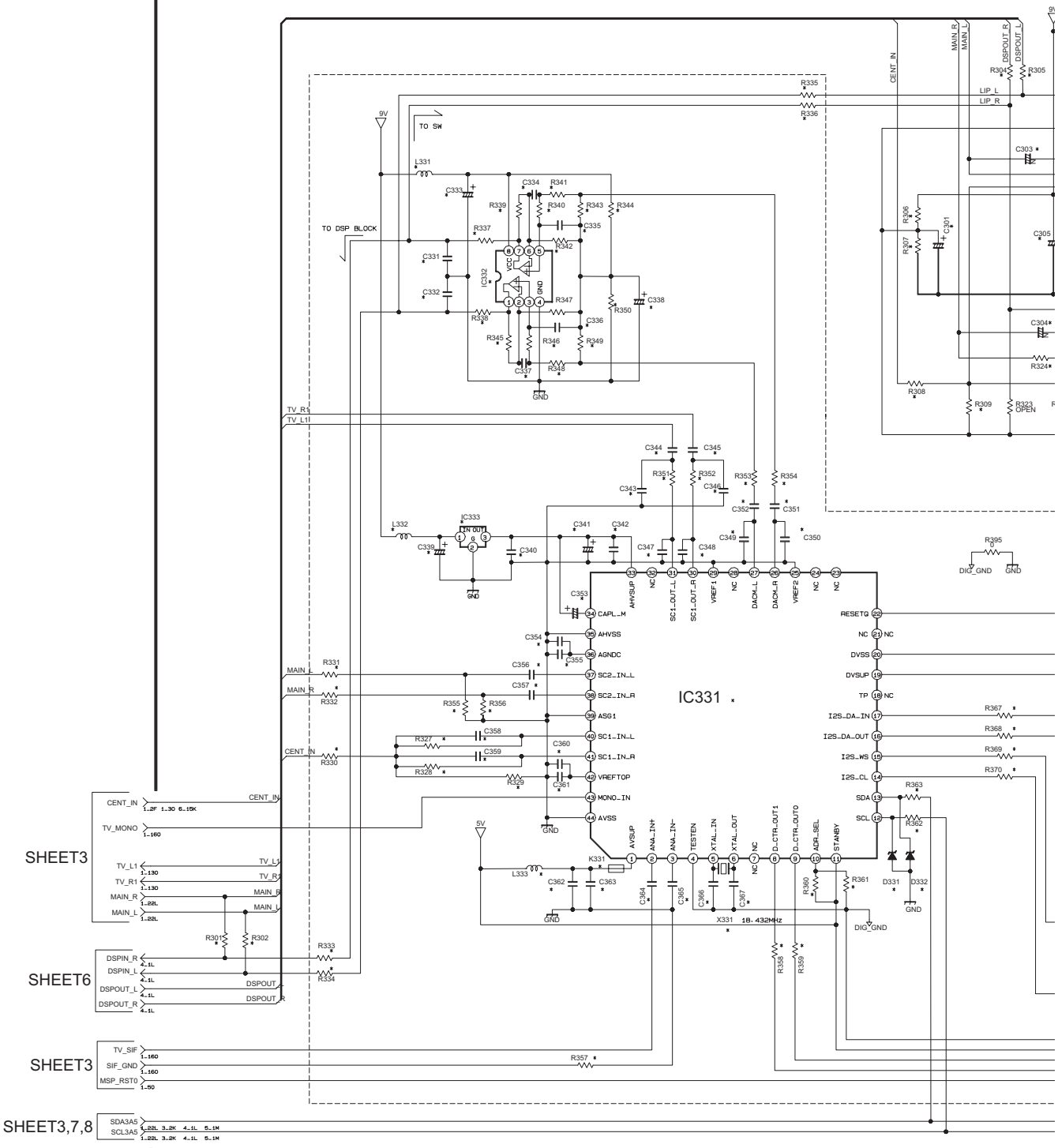

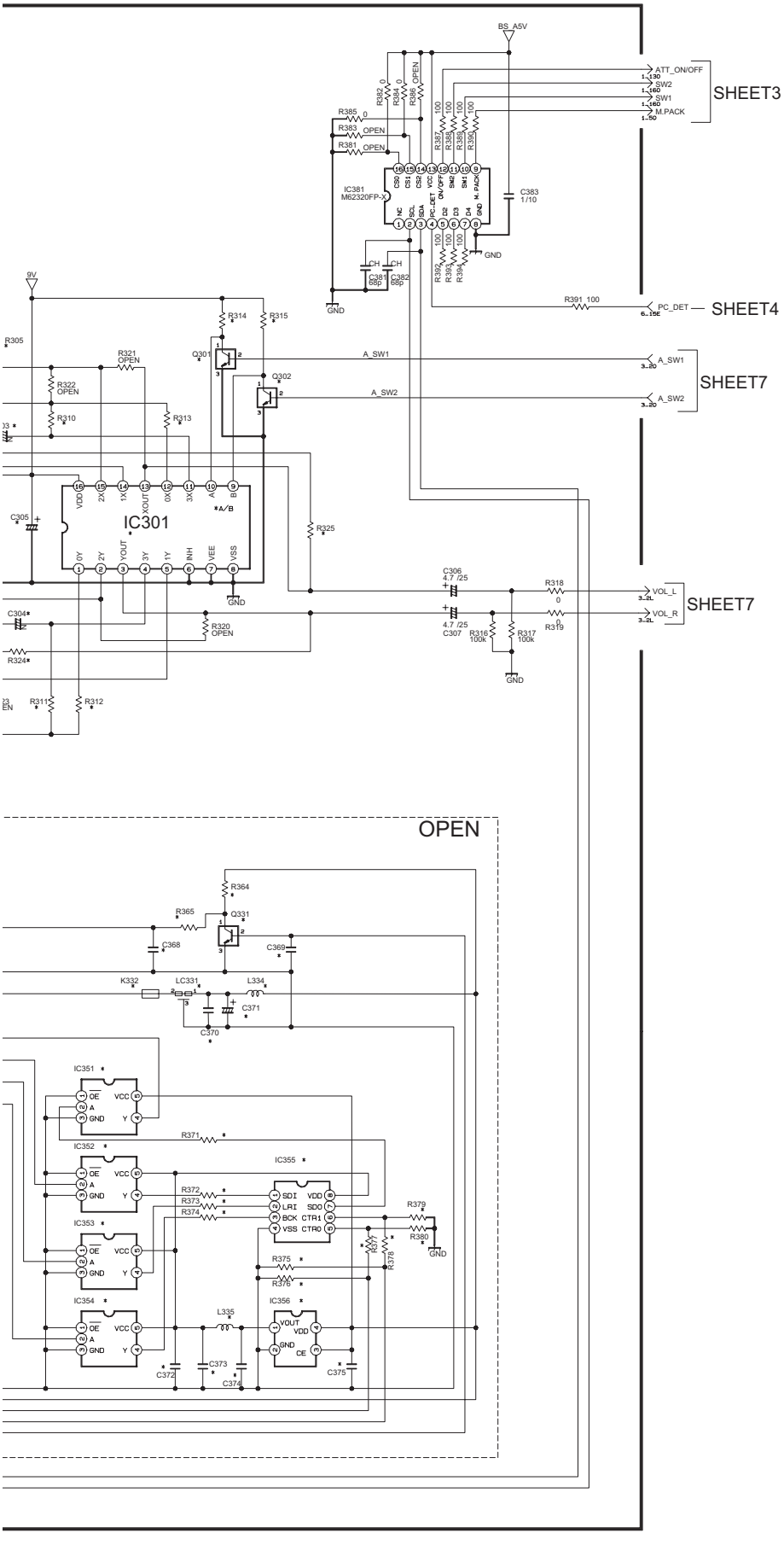

	HD-61G887A HD-56G887A HD-52G887A	HD-61G657A HD-56G657A HD-52G657A	HD-61G587A HD-52G587A	HD-61G567A HD-52G567A	HD-70FH97A HD-61FH97A HD-56FH97A HD-52FH97A	HD-70FN97A HD-61FN97A HD-56FN97A HD-52FN97A	HD-61FC97A HD-56FC97A	HD-56FM97A
	OLLC09898	OLLC10118	OLLC10118 -02		OLLC10494	OLLC10494 -02		
IC301	OPEN	OPEN	OPEN	OPEN	CD4052 BNS-X	CD4052 BNS-X	OPEN	OPEN
R304	OPEN	OPEN	OPEN	OPEN	100	100	OPEN	OPEN
R305	OPEN	OPEN	OPEN	OPEN	100	100	OPEN	OPEN
R306	OPEN	OPEN	OPEN	OPEN	3.3k	3.3k	OPEN	OPEN
R307	OPEN	OPEN	OPEN	OPEN	3.3k	3.3k	OPEN	OPEN
R308	OPEN	OPEN	OPEN	OPEN	0	0	OPEN	OPEN
R309	OPEN	OPEN	OPEN	OPEN	100k	100k	OPEN	OPEN
R310	OPEN	OPEN	OPEN	OPEN	100k	100k	OPEN	OPEN
R311	OPEN	OPEN	OPEN	OPEN	100k	100k	OPEN	OPEN
R312	OPEN	OPEN	OPEN	OPEN	100k	100k	OPEN	OPEN
R313	OPEN	OPEN	OPEN	OPEN	100k	100k	OPEN	OPEN
R314	OPEN	OPEN	OPEN	OPEN	22k	22k	OPEN	OPEN
R315	OPEN	OPEN	OPEN	OPEN	6.8k	6.8k	OPEN	OPEN
R324	0	0	0	0	OPEN	OPEN	0	0
R325	0	0	0	0	OPEN	OPEN	0	0
C301	OPEN	OPEN	OPEN	OPEN	47/16	47/16	OPEN	OPEN
C303	OPEN	OPEN	OPEN	OPEN	4.7/16	4.7/16	OPEN	OPEN
C304	OPEN	OPEN	OPEN	OPEN	4.7/16	4.7/16	OPEN	OPEN
C305	OPEN	OPEN	OPEN	OPEN	100/16	100/16	OPEN	OPEN
Q301	OPEN	OPEN	OPEN	OPEN	RT1N441C-X	RT1N441C-X	OPEN	OPEN
Q302	OPEN	OPEN	OPEN	OPEN	RT1N441C-X	RT1N441C-X	OPEN	OPEN
R301	OPEN	OPEN	OPEN	OPEN	0	0	OPEN	OPEN
R302	OPEN	OPEN	OPEN	OPEN	0	0	OPEN	OPEN

c10447002_0214_2/6_0.0

ANALOG PWB CIRCUIT DIAGRAM (4/6) [W_DSP BLOCK] SHEET 6

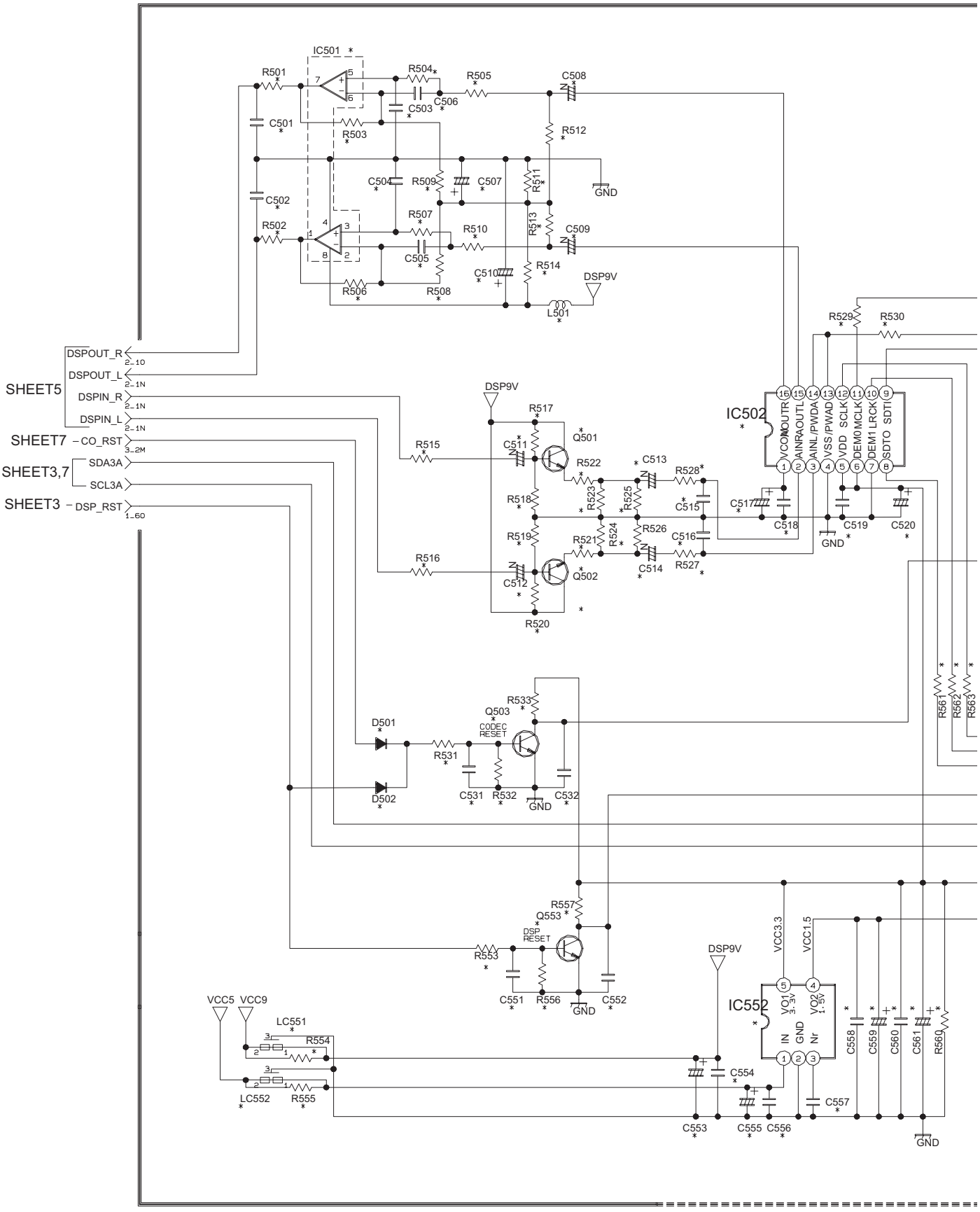

ANALOG PWB ASS'Y (4/6)

SRA-1015A-M2 [HD-56FH97, HD-61FH97]
SRA-1016A-M2 [HD-56FN97, HD-61FN97]

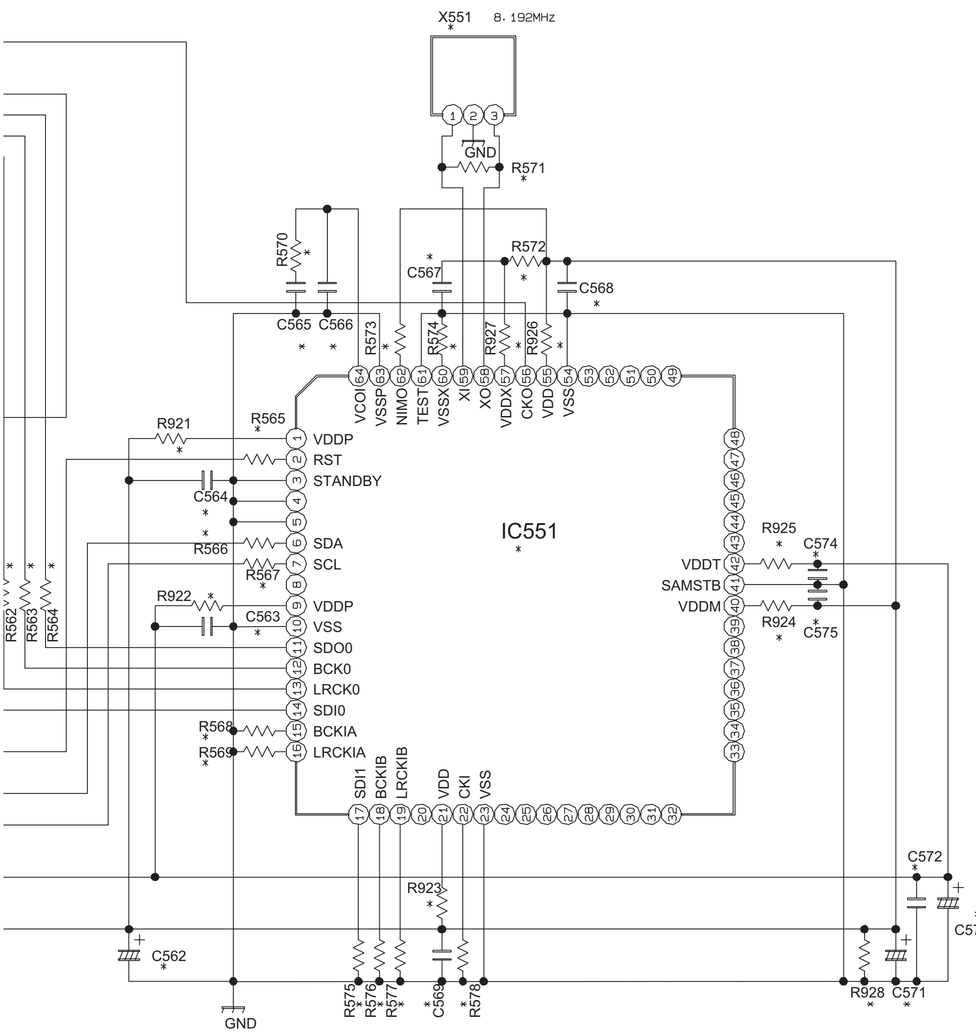

– NOTE –

0	:	NRSA63J-0R0X
NPN	:	2SC3928A/QR/-X
PNP	:	2SA1530A/QR/-X

	HD-61G887A HD-56G887A HD-52G887A	HD-61G657A HD-56G657A HD-52G657A	HD-61G587A HD-52G587A	HD-61G567A HD-52G567A	HD-70FH97A HD-61FH97A HD-56FH97A HD-52FH97A	HD-70FN97A HD-61FN97A HD-56FN97A HD-52FN97A	HD-61FC97A HD-56FC97A	HD-56FM97A
	OLLC09896	OLLC10118	OLLC10118-02		OLLC10494	OLLC10494-02		
IC501	OPEN	OPEN	OPEN	OPEN	HA17558AF-X	HA17558AF-X	OPEN	HA17558AF-X
IC502	OPEN	OPEN	OPEN	OPEN	AK4554VT-X	AK4554VT-X	OPEN	AK4554VT-X
IC551	OPEN	OPEN	OPEN	OPEN	JCC5067	JCC5067	OPEN	JCC5067
IC552	OPEN	OPEN	OPEN	OPEN	PQ2L3152MS-X	PQ2L3152MS-X	OPEN	PQ2L3152MS-X
LC551	OPEN	OPEN	OPEN	OPEN	NQR0470-007X	NQR0470-007X	OPEN	NQR0470-007X
LC552	OPEN	OPEN	OPEN	OPEN	NQR0470-007X	NQR0470-007X	OPEN	NQR0470-007X
D501	OPEN	OPEN	OPEN	OPEN	MA111-X	MA111-X	OPEN	MA111-X
D502	OPEN	OPEN	OPEN	OPEN	MA111-X	MA111-X	OPEN	MA111-X
Q501	OPEN	OPEN	OPEN	OPEN	2SC3928A/QR/-X	2SC3928A/QR/-X	OPEN	2SC3928A/QR/-X
Q502	OPEN	OPEN	OPEN	OPEN	2SC3928A/QR/-X	2SC3928A/QR/-X	OPEN	2SC3928A/QR/-X
Q503	OPEN	OPEN	OPEN	OPEN	2SC3928A/QR/-X	2SC3928A/QR/-X	OPEN	2SC3928A/QR/-X
Q551	OPEN	OPEN	OPEN	OPEN	2SK3019-X	2SK3019-X	OPEN	2SK3019-X
Q552	OPEN	OPEN	OPEN	OPEN	2SK3019-X	2SK3019-X	OPEN	2SK3019-X
Q553	OPEN	OPEN	OPEN	OPEN	2SC3928A/QR/-X	2SC3928A/QR/-X	OPEN	2SC3928A/QR/-X
R501	OPEN	OPEN	OPEN	OPEN	220	220	OPEN	220
R502	OPEN	OPEN	OPEN	OPEN	220	220	OPEN	220
R503	OPEN	OPEN	OPEN	OPEN	4.7k	4.7k	OPEN	4.7k
R504	OPEN	OPEN	OPEN	OPEN	3.3k	3.3k	OPEN	3.3k
R505	OPEN	OPEN	OPEN	OPEN	3.3k	3.3k	OPEN	3.3k
R506	OPEN	OPEN	OPEN	OPEN	4.7k	4.7k	OPEN	4.7k
R507	OPEN	OPEN	OPEN	OPEN	3.3k	3.3k	OPEN	3.3k
R508	OPEN	OPEN	OPEN	OPEN	1k	1k	OPEN	1k
R509	OPEN	OPEN	OPEN	OPEN	1k	1k	OPEN	1k
R510	OPEN	OPEN	OPEN	OPEN	3.3k	3.3k	OPEN	3.3k
R511	OPEN	OPEN	OPEN	OPEN	10k	10k	OPEN	10k
R512	OPEN	OPEN	OPEN	OPEN	33k	33k	OPEN	33k
R513	OPEN	OPEN	OPEN	OPEN	33k	33k	OPEN	33k
R514	OPEN	OPEN	OPEN	OPEN	10k	10k	OPEN	10k
R515	OPEN	OPEN	OPEN	OPEN	1k	1k	OPEN	1k
R516	OPEN	OPEN	OPEN	OPEN	1k	1k	OPEN	1k
R517	OPEN	OPEN	OPEN	OPEN	33k	33k	OPEN	33k
R518	OPEN	OPEN	OPEN	OPEN	33k	33k	OPEN	33k
R519	OPEN	OPEN	OPEN	OPEN	33k	33k	OPEN	33k
R520	OPEN	OPEN	OPEN	OPEN	33k	33k	OPEN	33k
R521	OPEN	OPEN	OPEN	OPEN	3.3k	3.3k	OPEN	3.3k
R522	OPEN	OPEN	OPEN	OPEN	3.3k	3.3k	OPEN	3.3k
R523	OPEN	OPEN	OPEN	OPEN	1k	1k	OPEN	1k
R524	OPEN	OPEN	OPEN	OPEN	1k	1k	OPEN	1k
R525	OPEN	OPEN	OPEN	OPEN	1k	1k	OPEN	1k
R526	OPEN	OPEN	OPEN	OPEN	1k	1k	OPEN	1k
R527	OPEN	OPEN	OPEN	OPEN	470	470	OPEN	470
R528	OPEN	OPEN	OPEN	OPEN	470	470	OPEN	470
R529	OPEN	OPEN	OPEN	OPEN	100	100	OPEN	100
R530	OPEN	OPEN	OPEN	OPEN	0	0	OPEN	0
R531	OPEN	OPEN	OPEN	OPEN	3.3k	3.3k	OPEN	3.3k
R532	OPEN	OPEN	OPEN	OPEN	10k	10k	OPEN	10k
R533	OPEN	OPEN	OPEN	OPEN	10k	10k	OPEN	10k
R551	OPEN	OPEN	OPEN	OPEN	100	100	OPEN	100
R552	OPEN	OPEN	OPEN	OPEN	100	100	OPEN	100
R553	OPEN	OPEN	OPEN	OPEN	10k	10k	OPEN	10k
R554	OPEN	OPEN	OPEN	OPEN	0	0	OPEN	0
R555	OPEN	OPEN	OPEN	OPEN	0	0	OPEN	0
R556	OPEN	OPEN	OPEN	OPEN	10k	10k	OPEN	10k
R557	OPEN	OPEN	OPEN	OPEN	10k	10k	OPEN	10k
R558	OPEN	OPEN	OPEN	OPEN	68k	68k	OPEN	68k
R559	OPEN	OPEN	OPEN	OPEN	68k	68k	OPEN	68k
R560	OPEN	OPEN	OPEN	OPEN	6.8k	6.8k	OPEN	6.8k
R561	OPEN	OPEN	OPEN	OPEN	220	220	OPEN	220
R562	OPEN	OPEN	OPEN	OPEN	220	220	OPEN	220
R563	OPEN	OPEN	OPEN	OPEN	220	220	OPEN	220
R564	OPEN	OPEN	OPEN	OPEN	220	220	OPEN	220
R565	OPEN	OPEN	OPEN	OPEN	0	0	OPEN	0
R566	OPEN	OPEN	OPEN	OPEN	100	100	OPEN	100
R567	OPEN	OPEN	OPEN	OPEN	100	100	OPEN	100
R568	OPEN	OPEN	OPEN	OPEN	10k	10k	OPEN	10k
R569	OPEN	OPEN	OPEN	OPEN	10k	10k	OPEN	10k
R570	OPEN	OPEN	OPEN	OPEN	100	100	OPEN	100
R571	OPEN	OPEN	OPEN	OPEN	1M	1M	OPEN	1M
R572	OPEN	OPEN	OPEN	OPEN	4.7	4.7	OPEN	4.7
R573	OPEN	OPEN	OPEN	OPEN	10k	10k	OPEN	10k
R574	OPEN	OPEN	OPEN	OPEN	0	0	OPEN	0
R575	OPEN	OPEN	OPEN	OPEN	10k	10k	OPEN	10k
R576	OPEN	OPEN	OPEN	OPEN	10k	10k	OPEN	10k
R577	OPEN	OPEN	OPEN	OPEN	10k	10k	OPEN	10k
R578	OPEN	OPEN	OPEN	OPEN	10k	10k	OPEN	10k
R921	OPEN	OPEN	OPEN	OPEN	0	0	OPEN	0
R922	OPEN	OPEN	OPEN	OPEN	0	0	OPEN	0
R923	OPEN	OPEN	OPEN	OPEN	0	0	OPEN	0
R924	OPEN	OPEN	OPEN	OPEN	0	0	OPEN	0
R925	OPEN	OPEN	OPEN	OPEN	0	0	OPEN	0
R926	OPEN	OPEN	OPEN	OPEN	0	0	OPEN	0
R927	OPEN	OPEN	OPEN	OPEN	0	0	OPEN	0
R928	OPEN	OPEN	OPEN	OPEN	NRSA63J-222X	NRSA63J-222X	OPEN	NRSA63J-222X

	HD-61G887A HD-56G887A HD-52G887A	HD-61G657A HD-56G657A HD-52G657A	HD-61G587A HD-52G587A	HD-61G567A HD-52G567A	HD-70FH97A HD-61FH97A HD-56FH97A HD-52FH97A	HD-70FN97A HD-61FN97A HD-56FN97A HD-52FN97A	HD-61FC97A HD-56FC97A	HD-56FM97A
	OLLC09896	OLLC10118	OLLC10118-02		OLLC10494	OLLC10494-02		
C501	OPEN	OPEN	OPEN	OPEN	NCB31CK-223X	NCB31CK-223X	OPEN	NCB31CK-223X
C502	OPEN	OPEN	OPEN	OPEN	NCB31CK-223X	NCB31CK-223X	OPEN	NCB31CK-223X
C503	OPEN	OPEN	OPEN	OPEN	0.0022	0.0022	OPEN	0.0022
C504	OPEN	OPEN	OPEN	OPEN	0.0022	0.0022	OPEN	0.0022
C505	OPEN	OPEN	OPEN	OPEN	0.0082	0.0082	OPEN	0.0082
C506	OPEN	OPEN	OPEN	OPEN	0.0082	0.0082	OPEN	0.0082
C507	OPEN	OPEN	OPEN	OPEN	NEHL1AM-107X	NEHL1AM-107X	OPEN	NEHL1AM-107X
C508	OPEN	OPEN	OPEN	OPEN	1/50	1/50	OPEN	1/50
C509	OPEN	OPEN	OPEN	OPEN	1/50	1/50	OPEN	1/50
C510	OPEN	OPEN	OPEN	OPEN	NEHL1CM-476X	NEHL1CM-476X	OPEN	NEHL1CM-476X
C511	OPEN	OPEN	OPEN	OPEN	NEHL1EM-475X	NEHL1EM-475X	OPEN	NEHL1EM-475X
C512	OPEN	OPEN	OPEN	OPEN	NEHL1EM-475X	NEHL1EM-475X	OPEN	NEHL1EM-475X
C513	OPEN	OPEN	OPEN	OPEN	NEHL1EM-475X	NEHL1EM-475X	OPEN	NEHL1EM-475X
C514	OPEN	OPEN	OPEN	OPEN	NEHL1EM-475X	NEHL1EM-475X	OPEN	NEHL1EM-475X
C515	OPEN	OPEN	OPEN	OPEN	1000p	1000p	OPEN	1000p
C516	OPEN	OPEN	OPEN	OPEN	1000p	1000p	OPEN	1000p
C517	OPEN	OPEN	OPEN	OPEN	NEHL1EM-475X	NEHL1EM-475X	OPEN	NEHL1EM-475X
C518	OPEN	OPEN	OPEN	OPEN	0.1/16	0.1/16	OPEN	0.1/16
C519	OPEN	OPEN	OPEN	OPEN	0.1/16	0.1/16	OPEN	0.1/16
C520	OPEN	OPEN	OPEN	OPEN	NEHL1CM-106X	NEHL1CM-106X	OPEN	NEHL1CM-106X
C531	OPEN	OPEN	OPEN	OPEN	1000p	1000p	OPEN	1000p
C532	OPEN	OPEN	OPEN	OPEN	1000p	1000p	OPEN	1000p
C551	OPEN	OPEN	OPEN	OPEN	1000p	1000p	OPEN	1000p
C552	OPEN	OPEN	OPEN	OPEN	1000p	1000p	OPEN	1000p
C553	OPEN	OPEN	OPEN	OPEN	OPEN	OPEN	OPEN	OPEN
C554	OPEN	OPEN	OPEN	OPEN	OPEN	OPEN	OPEN	OPEN
C555	OPEN	OPEN	OPEN	OPEN	NEHL1CM-106X	NEHL1CM-106X	OPEN	NEHL1CM-106X
C556	OPEN	OPEN	OPEN	OPEN	OPEN	OPEN	OPEN	OPEN
C557	OPEN	OPEN	OPEN	OPEN	0.1/16	0.1/16	OPEN	0.1/16
C558	OPEN	OPEN	OPEN	OPEN	NCB30JK-225X	NCB30JK-225X	OPEN	NCB30JK-225X
C559	OPEN	OPEN	OPEN	OPEN	NEHL0JM-226X	NEHL0JM-226X	OPEN	NEHL0JM-226X
C560	OPEN	OPEN	OPEN	OPEN	NCB30JK-225X	NCB30JK-225X	OPEN	NCB30JK-225X
C561	OPEN	OPEN	OPEN	OPEN	NEHL0JM-226X	NEHL0JM-226X	OPEN	NEHL0JM-226X
C562	OPEN	OPEN	OPEN	OPEN	NEHL0JM-226X	NEHL0JM-226X	OPEN	NEHL0JM-226X
C563	OPEN	OPEN	OPEN	OPEN	0.01	0.01	OPEN	0.01
C564	OPEN	OPEN	OPEN	OPEN	0.01	0.01	OPEN	0.01
C565	OPEN	OPEN	OPEN	OPEN	0.1	0.1	OPEN	0.1
C566	OPEN	OPEN	OPEN	OPEN	0.1	0.1	OPEN	0.1
C567	OPEN	OPEN	OPEN	OPEN	0.01	0.01	OPEN	0.01
C568	OPEN	OPEN	OPEN	OPEN	0.01	0.01	OPEN	0.01
C569	OPEN	OPEN	OPEN	OPEN	0.01	0.01	OPEN	0.01
C571	OPEN	OPEN	OPEN	OPEN	NEHL0JM-226X	NEHL0JM-226X	OPEN	NEHL0JM-226X
C572	OPEN	OPEN	OPEN	OPEN	NCB31CK-105X	NCB31CK-105X	OPEN	NCB31CK-105X
C573	OPEN	OPEN	OPEN	OPEN	NEHL0JM-226X	NEHL0JM-226X	OPEN	NEHL0JM-226X
C574	OPEN	OPEN	OPEN	OPEN	0.01	0.01	OPEN	0.01
C575	OPEN	OPEN	OPEN	OPEN	0.01	0.01	OPEN	0.01
L501	OPEN	OPEN	OPEN	OPEN	NRSA02J-0R0X	NRSA02J-0R0X	OPEN	NRSA02J-0R0X
X551	OPEN	OPEN	OPEN	OPEN	NAX0623-001X	NAX0623-001X	OPEN	NAX0623-001X
D501	OPEN	OPEN	OPEN	OPEN	1SS355W-X	1SS355W-X	OPEN	1SS355W-X
D502	OPEN	OPEN	OPEN	OPEN	1SS355W-X	1SS355W-X	OPEN	1SS355W-X

c10447004_0214_4/6_0.0

ANALOG PWB CIRCUIT DIAGRAM (5/6) [AUDIO BLOCK] SHEET 7

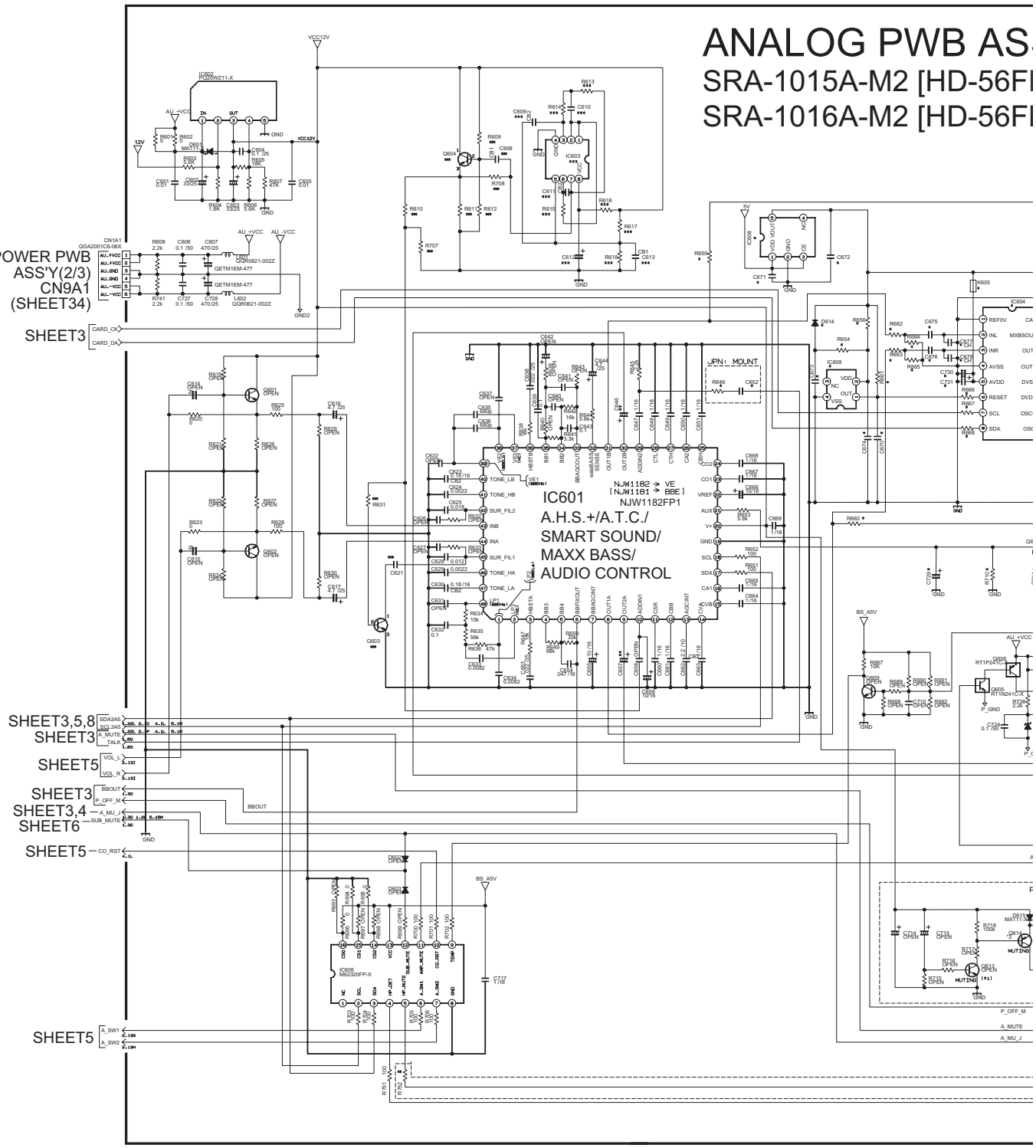

SS'Y (5/6)

5FH97, HD-61FH97]

5FN97, HD-61FN97]

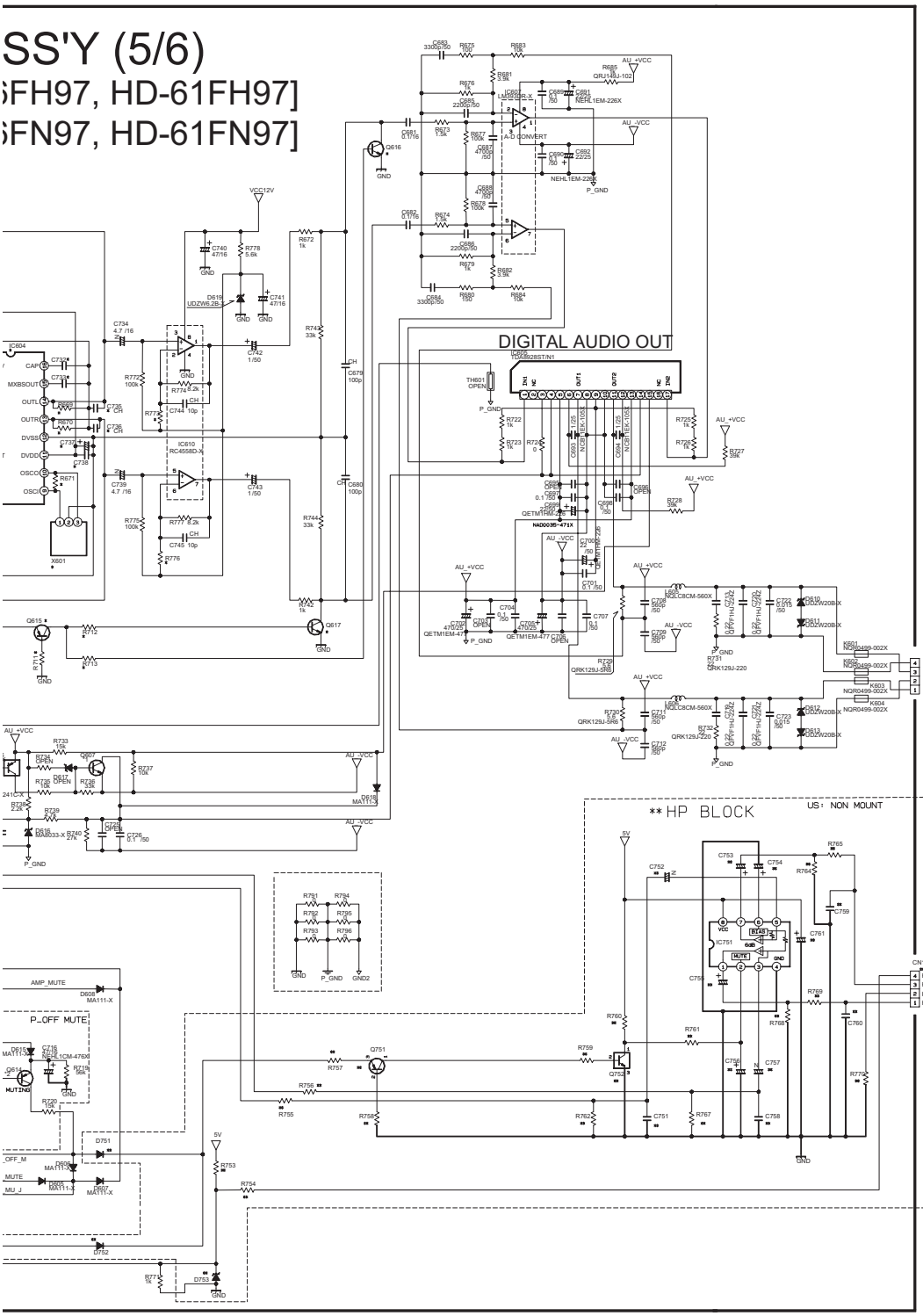

c10447003_0214_3/6_0.0

ANALOG PWB CIRCUIT DIAGRAM (6/6) [POWER BLOCK] SHEET 8

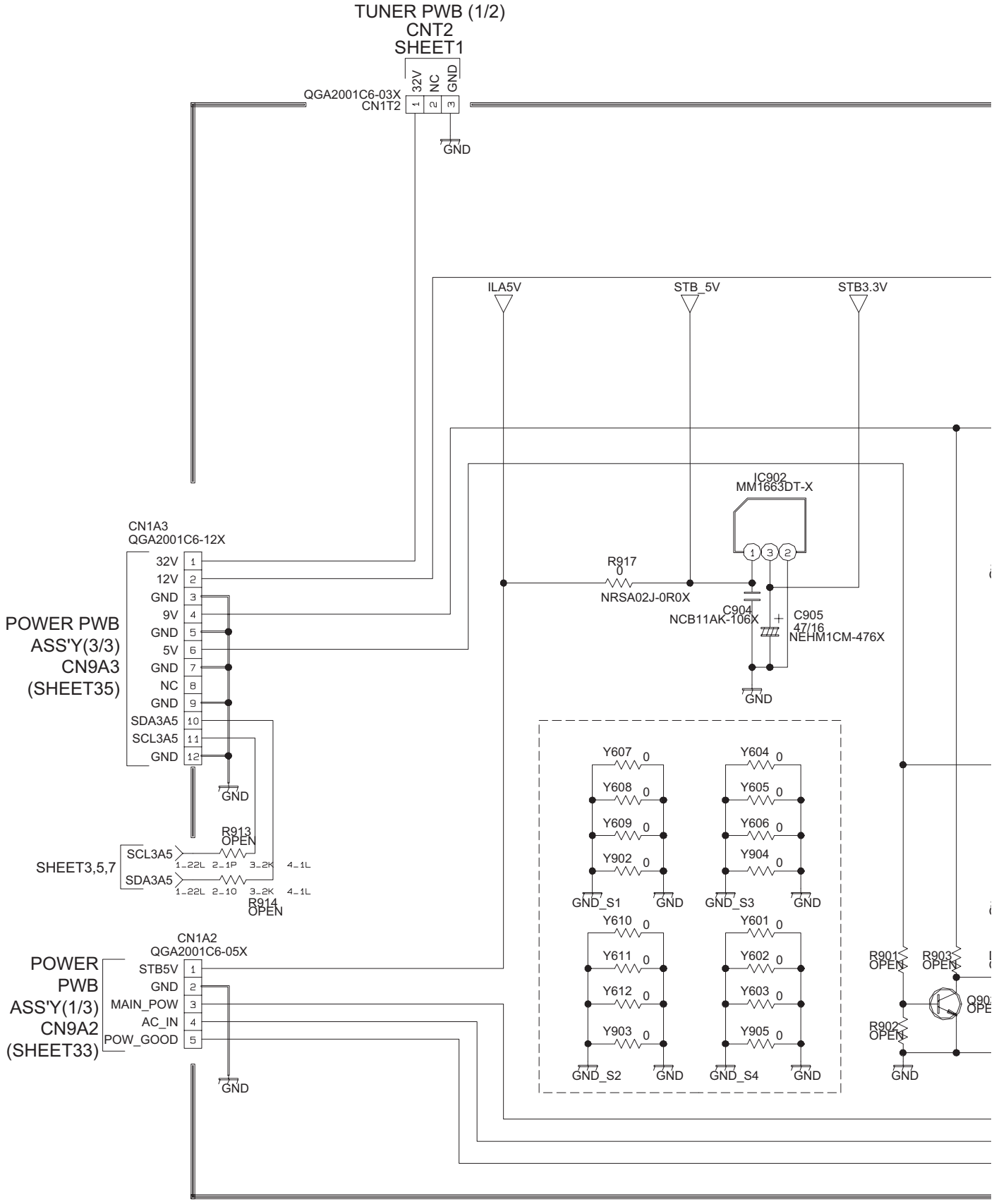

	DSP							
	HD-61G887A HD-56G887A HD-52G887A	HD-61G657A HD-56G657A HD-52G657A	HD-61G587A HD-52G587A	HD-61G567A HD-52G567A	HD-70FH97A HD-61FH97A HD-56FH97A HD-52FH97A	HD-70FN97A HD-61FN97A HD-56FN97A HD-52FN97A	HD-61FC97A HD-56FC97A	HD-56FM97A
	OLLC09896	OLLC10118	OLLC10118 -02		OLLC10494	OLLC10494 -02		
C919	OPEN	OPEN	OPEN	OPEN	NEX51CM -335X	NEX51CM -335X	OPEN	OPEN
C920	OPEN	OPEN	OPEN	OPEN	NEX50JM -156X	NEX50JM -156X	OPEN	OPEN
L905	OPEN	OPEN	OPEN	OPEN	NQL52EM -220X	NQL52EM -220X	OPEN	OPEN
L906	OPEN	OPEN	OPEN	OPEN	NQL52EM -220X	NQL52EM -220X	OPEN	OPEN

ANALOG PWB ASS'Y (6/6)

SRA-1015A-M2 [HD-56FH97, HD-61FH97]
SRA-1016A-M2 [HD-56FN97, HD-61FN97]

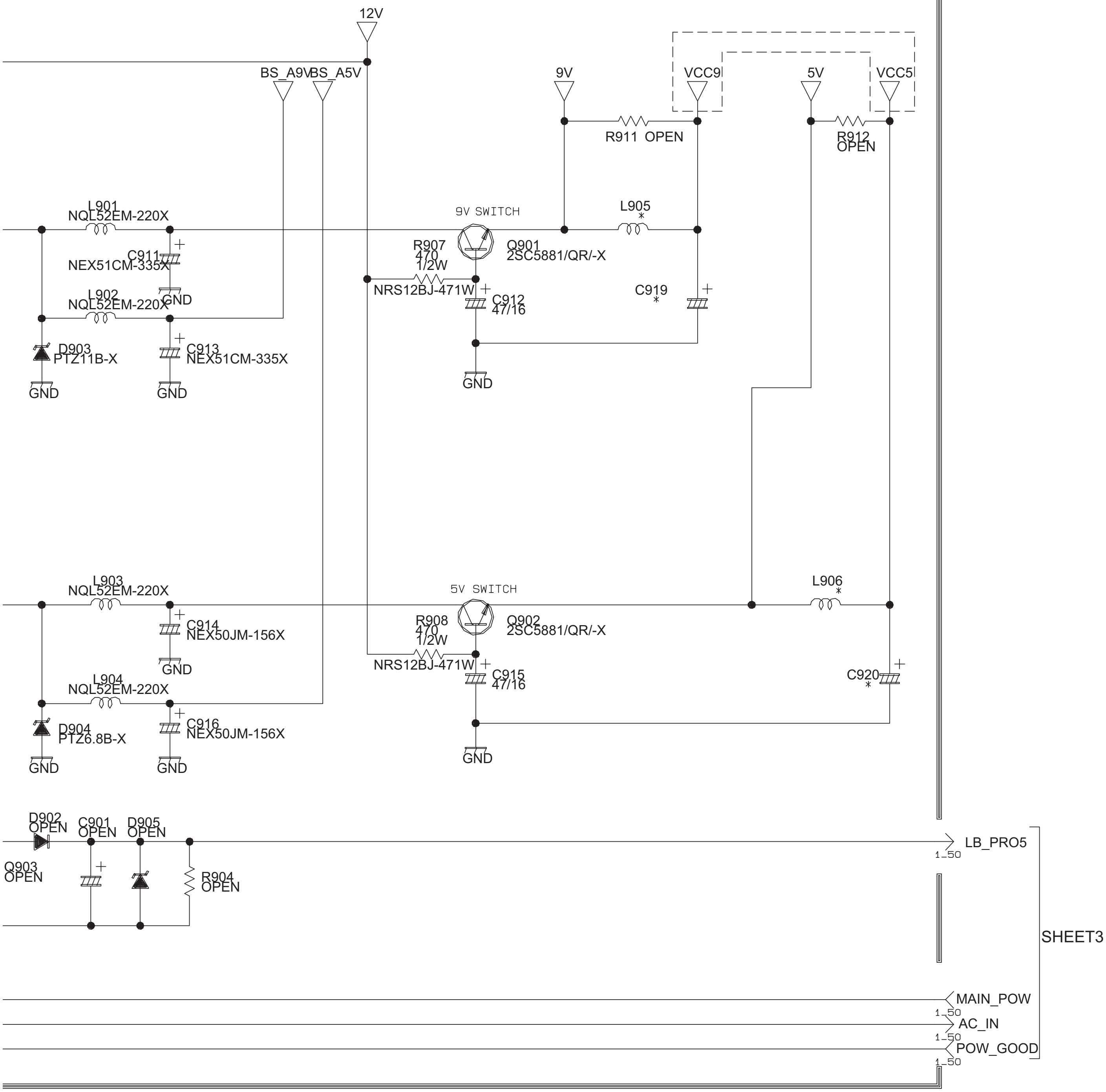

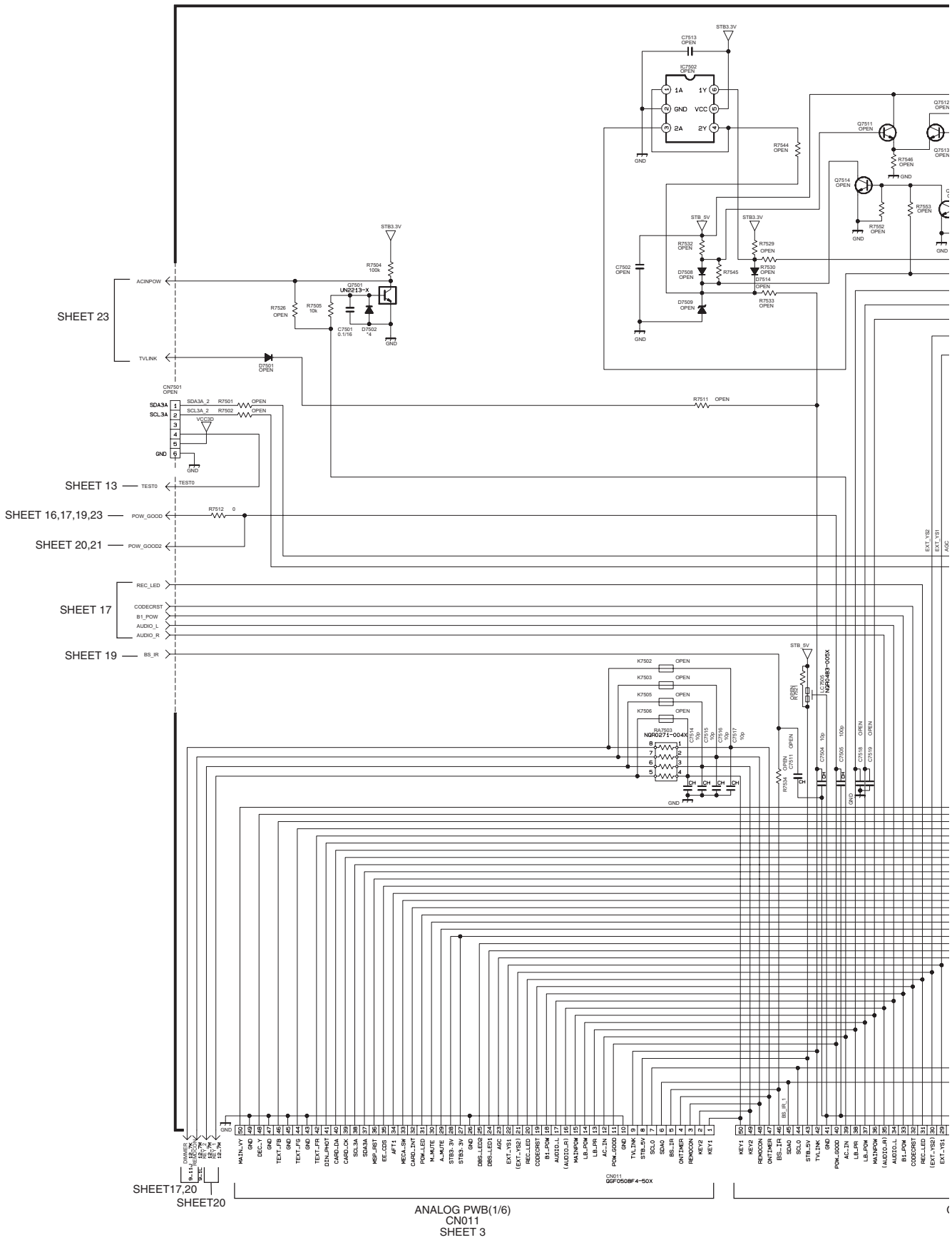
SHEET 23
SHEET 13
SHEET 16,17,19,23
SHEET 20,21
SHEET 17
SHEET 19
SHEET17,20
SHEET20
ACINPOW
TVLINK
TEST0
POW_GOOD
POW_GOOD2
REC_LED
CODECRST
B1_POW
AUDIO_L
AUDIO_R
BS_IR
STB3.3V
STB_5V
GND
ANALOG PWB(1/6)
CN011
SHEET 3

DIGITAL PWB ASS'Y (1/15)

SRA0D124A-M2 [HD-56FH97]
SRA0D127A-M2 [HD-56FN97]
SRA0D123A-M2 [HD-61FH97]
SRA0D126A-M2 [HD-61FN97]

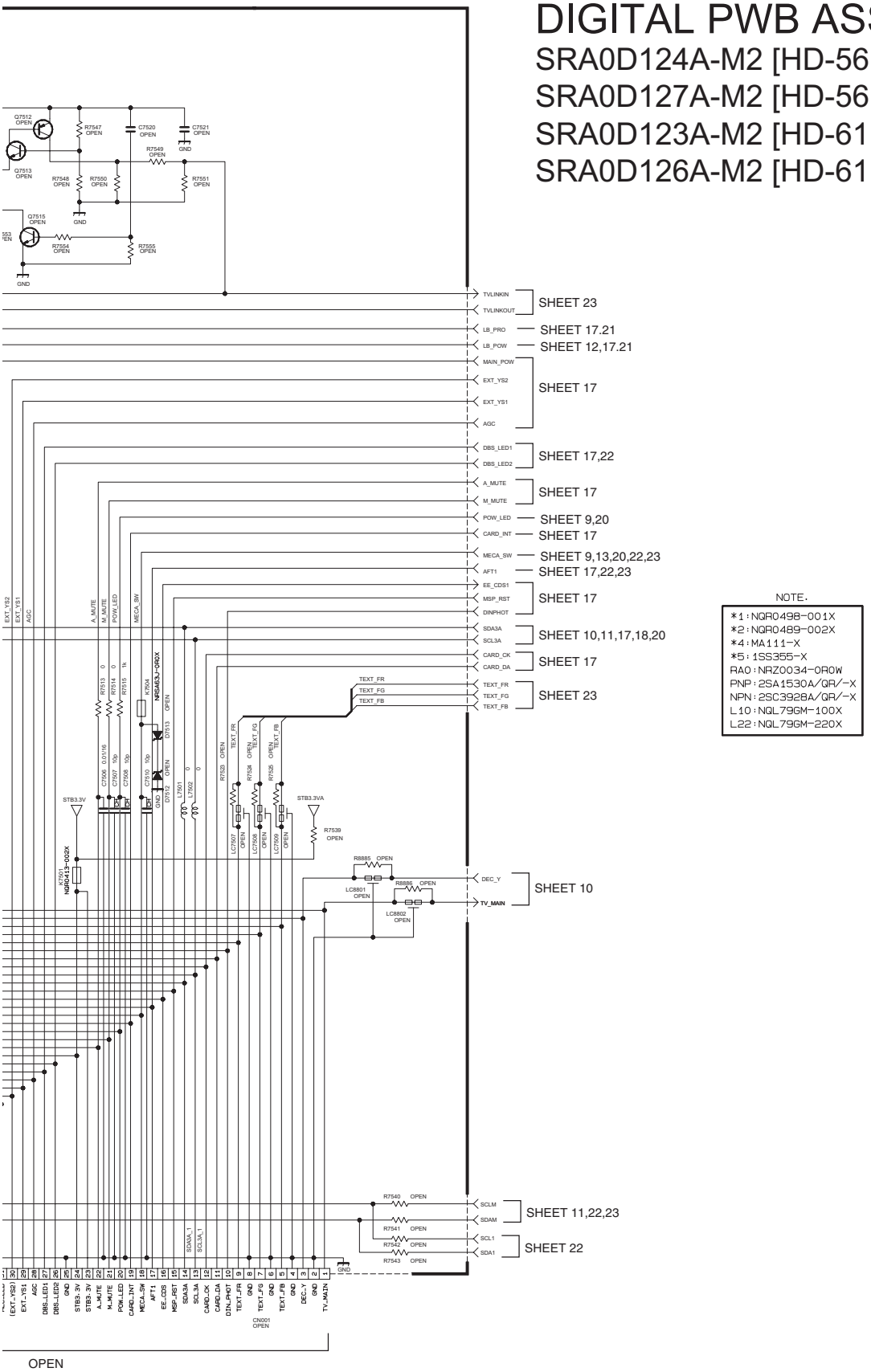

NOTE.

*1 : NQR0498-001X
*2 : NQR0489-002X
*4 : MA111-X
*5 : 1SS355-X
RA0 : NRZ0034-0R0W
PNP : 2SA1530A/QR/-X
NPN : 2SC3928A/QR/-X
L10 : NQL79GM-100X
L22 : NQL79GM-220X

OPEN

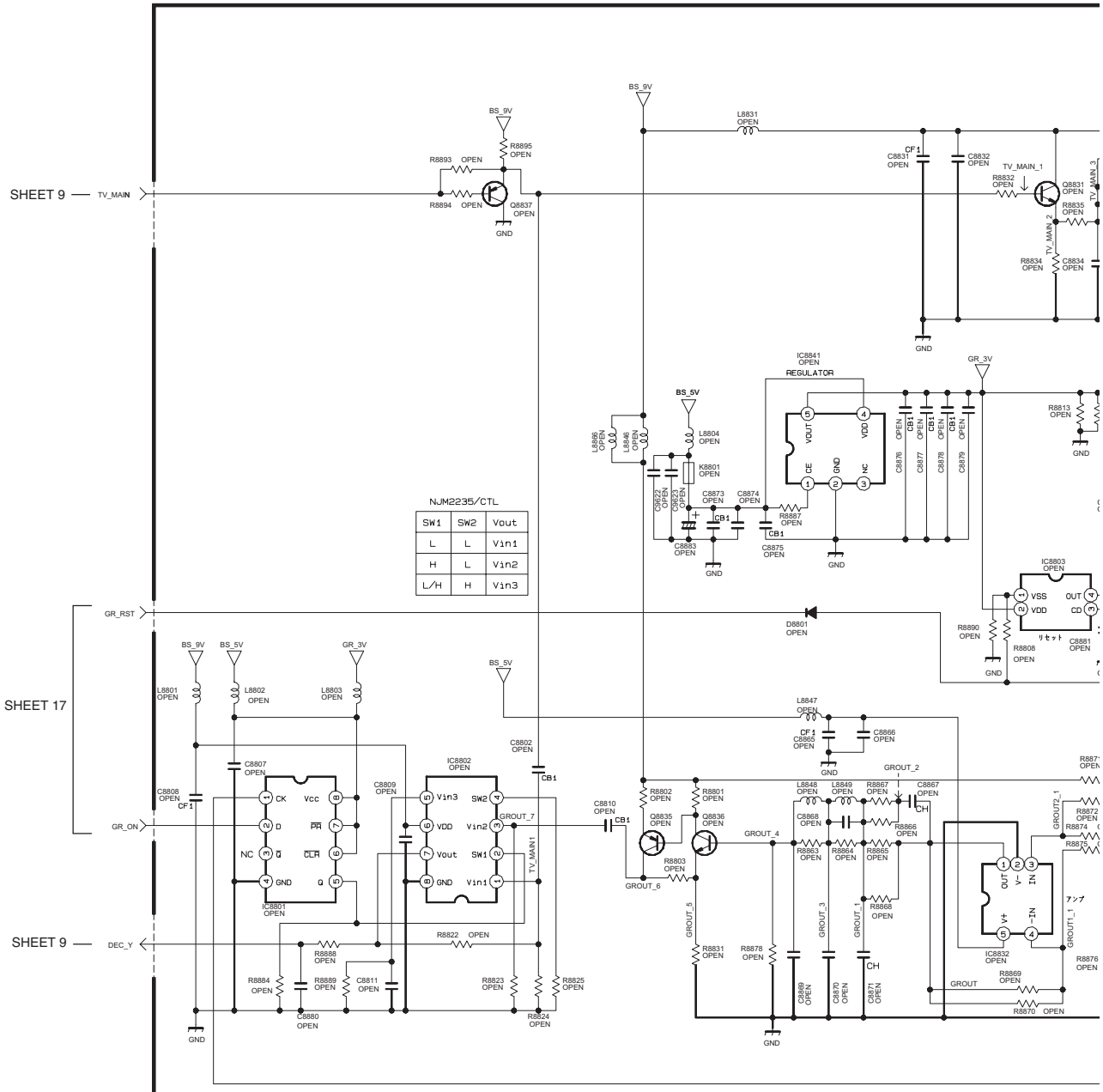

NOTE.

*1 : NQL0413-003X
*2 : NQL092K-100X
*3 : NQL092K-2R2X
*4 : NQL092K-6R8X
*5 : MA111-X
*6 : NQR0499-001X
LC1 : NQR0470-001X
LC2 : NQR0470-007X
LC3 : NQR0313-009X
PNP : 2SA1530A/QR/-X
NPN : 2SC3928A/QR/-X

DIGITAL PWB ASS'Y (2/15)

SRA0D124A-M2 [HD-56FH97]
SRA0D127A-M2 [HD-56FN97]
SRA0D123A-M2 [HD-61FH97]
SRA0D126A-M2 [HD-61FN97]

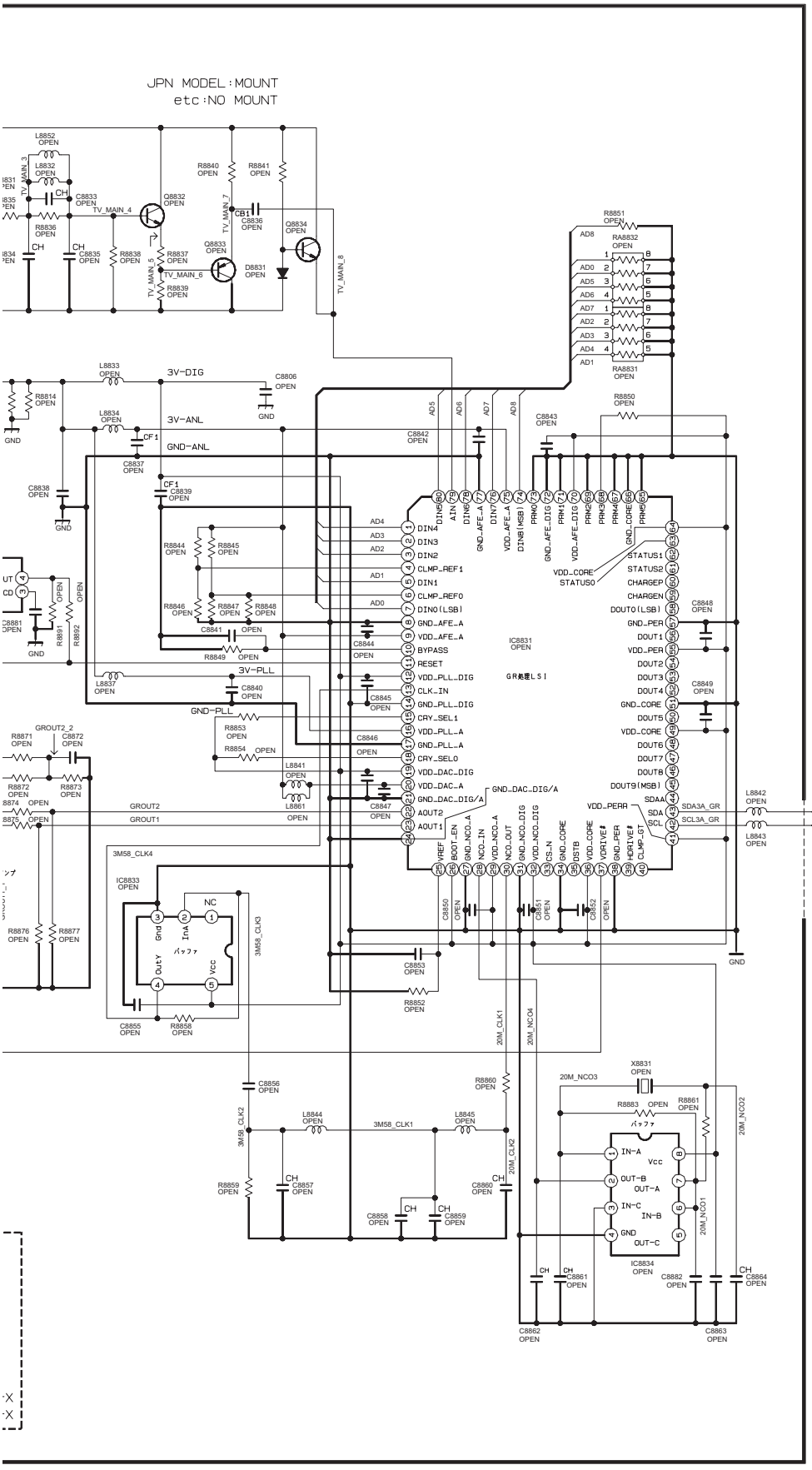

c10502001_0712_15/16_0.0

DIGITAL PWB ASS'Y (3/15)

SRA0D124A-M2 [HD-56FH97]
SRA0D127A-M2 [HD-56FN97]
SRA0D123A-M2 [HD-61FH97]
SRA0D126A-M2 [HD-61FN97]

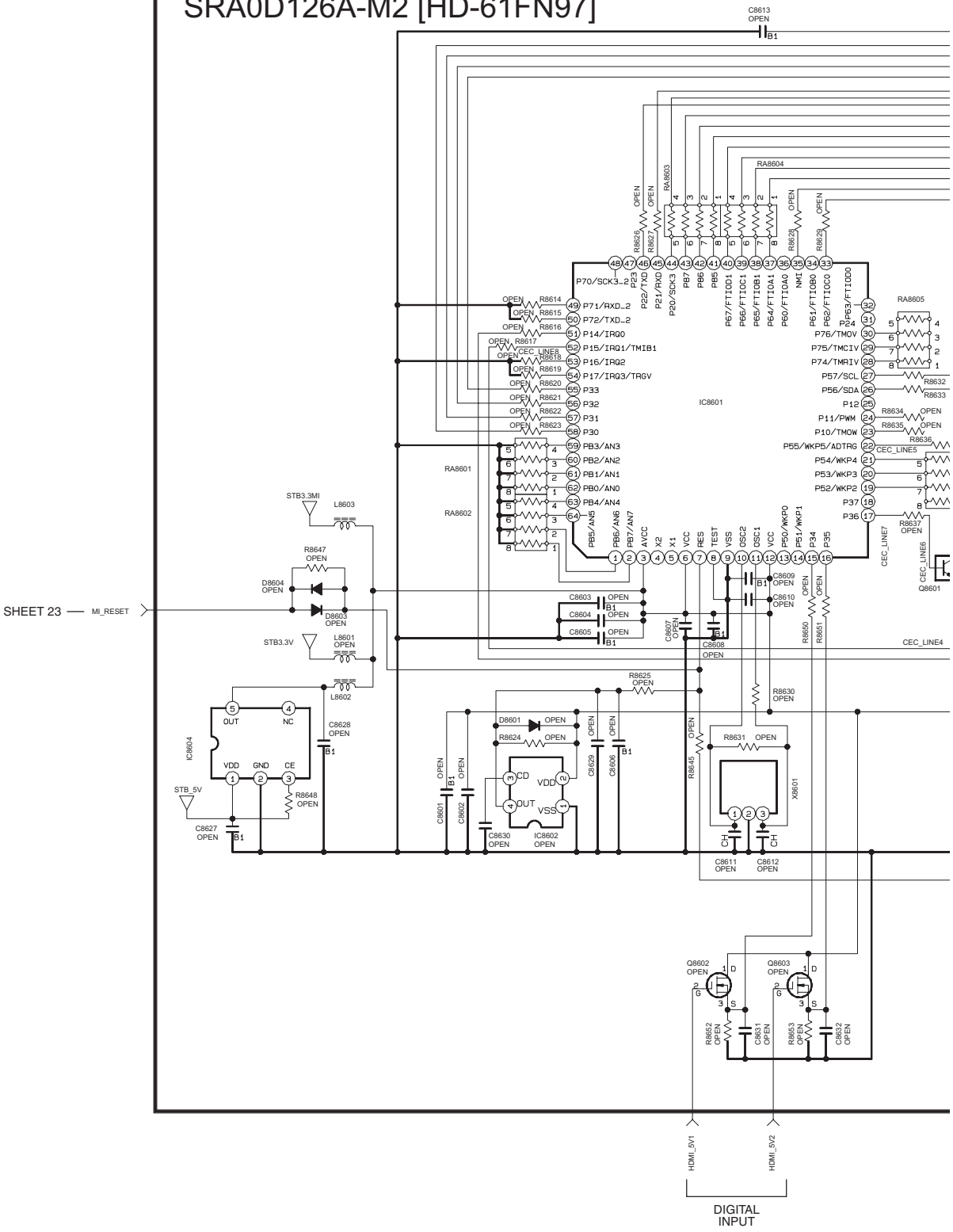

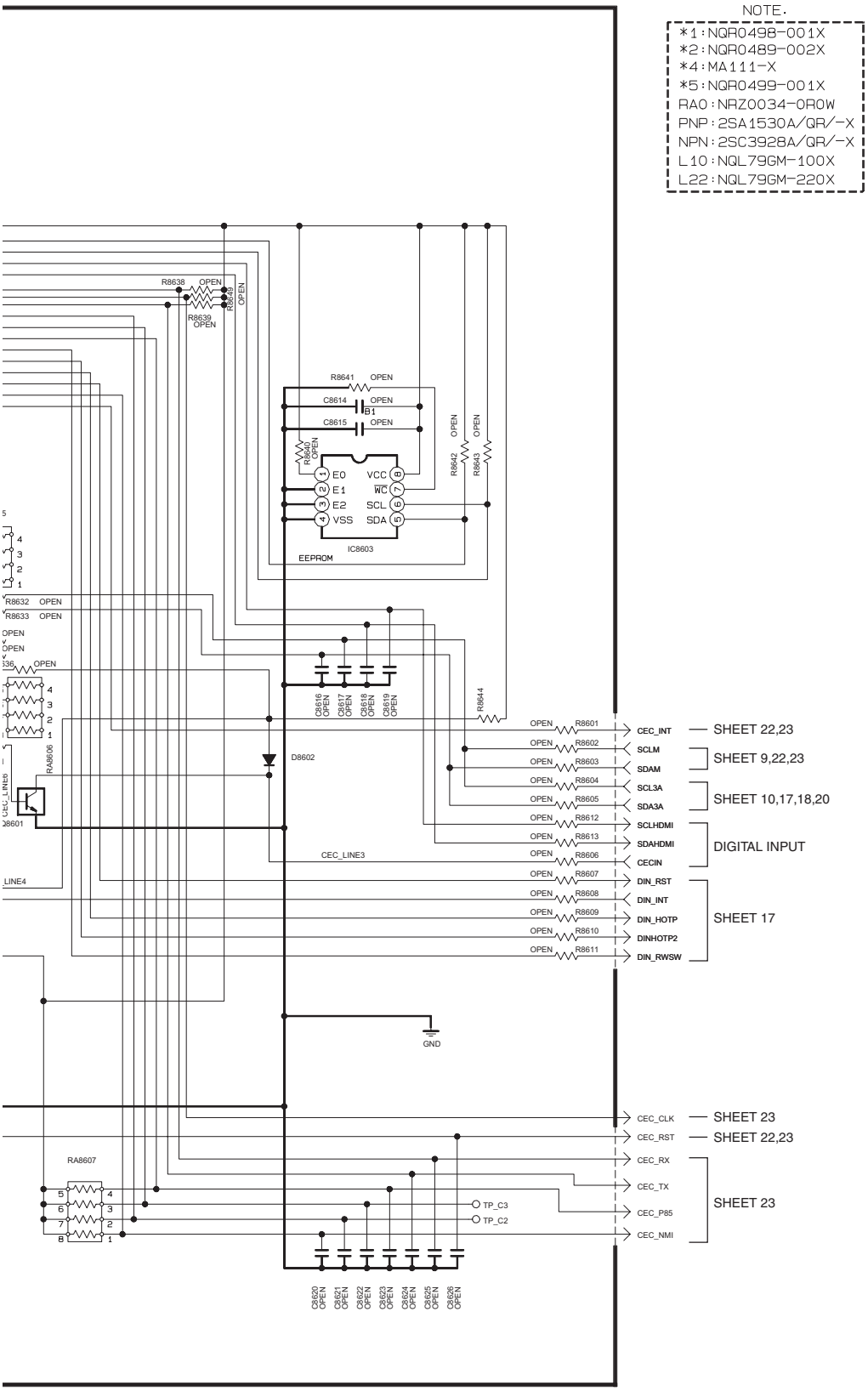

c10502001_0712_14/16_0.0

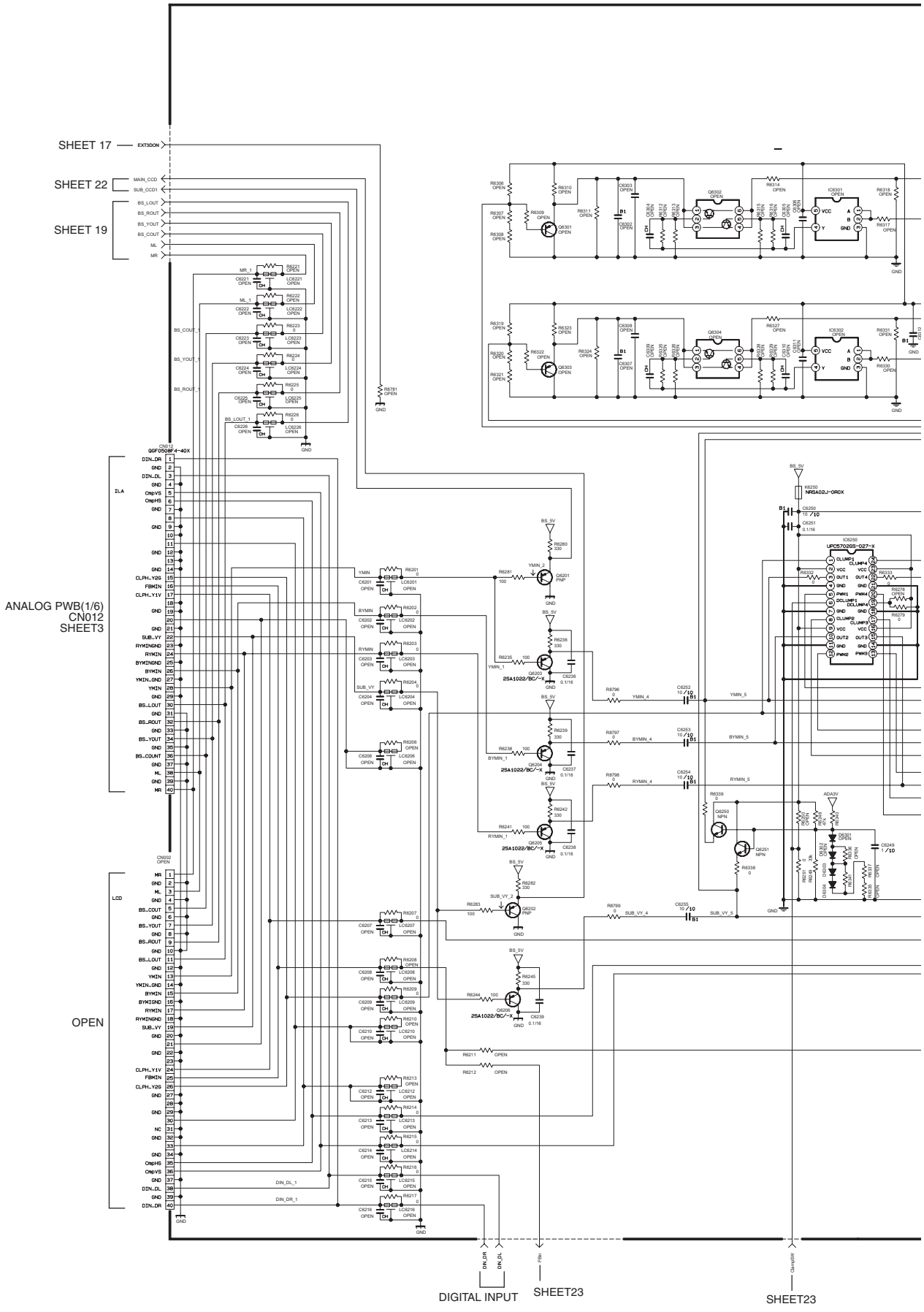
SHEET 17
SHEET 22
SHEET 19
ANALOG PWB(1/6)
CN012
SHEET3
OPEN
DIGITAL INPUT
SHEET23
SHEET23

DIGITAL PWB ASS'Y (4/15)

SRA0D124A-M2 [HD-56FH97]
SRA0D127A-M2 [HD-56FN97]
SRA0D123A-M2 [HD-61FH97]
SRA0D126A-M2 [HD-61FN97]

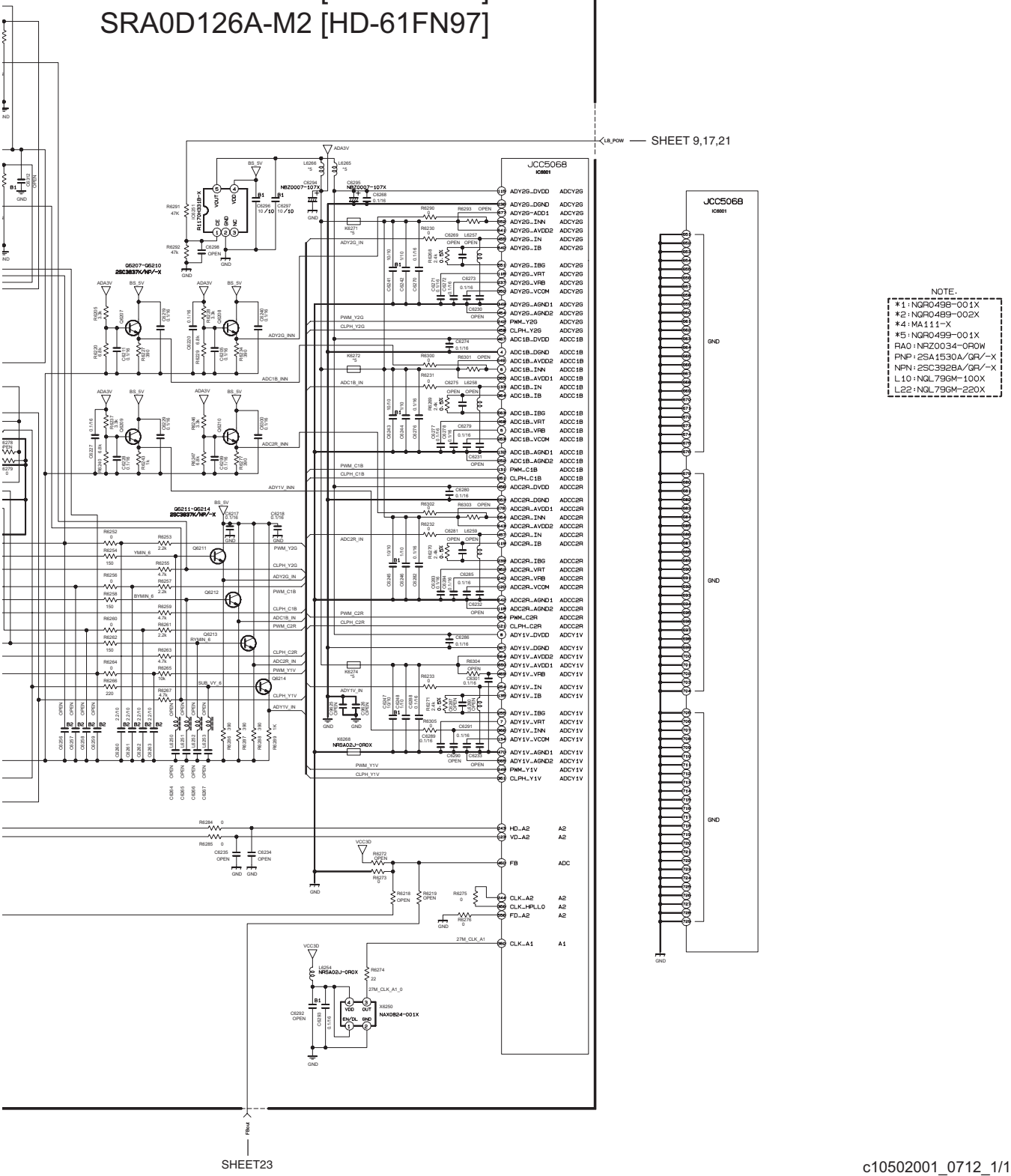

c10502001_0712_1/16_0.0

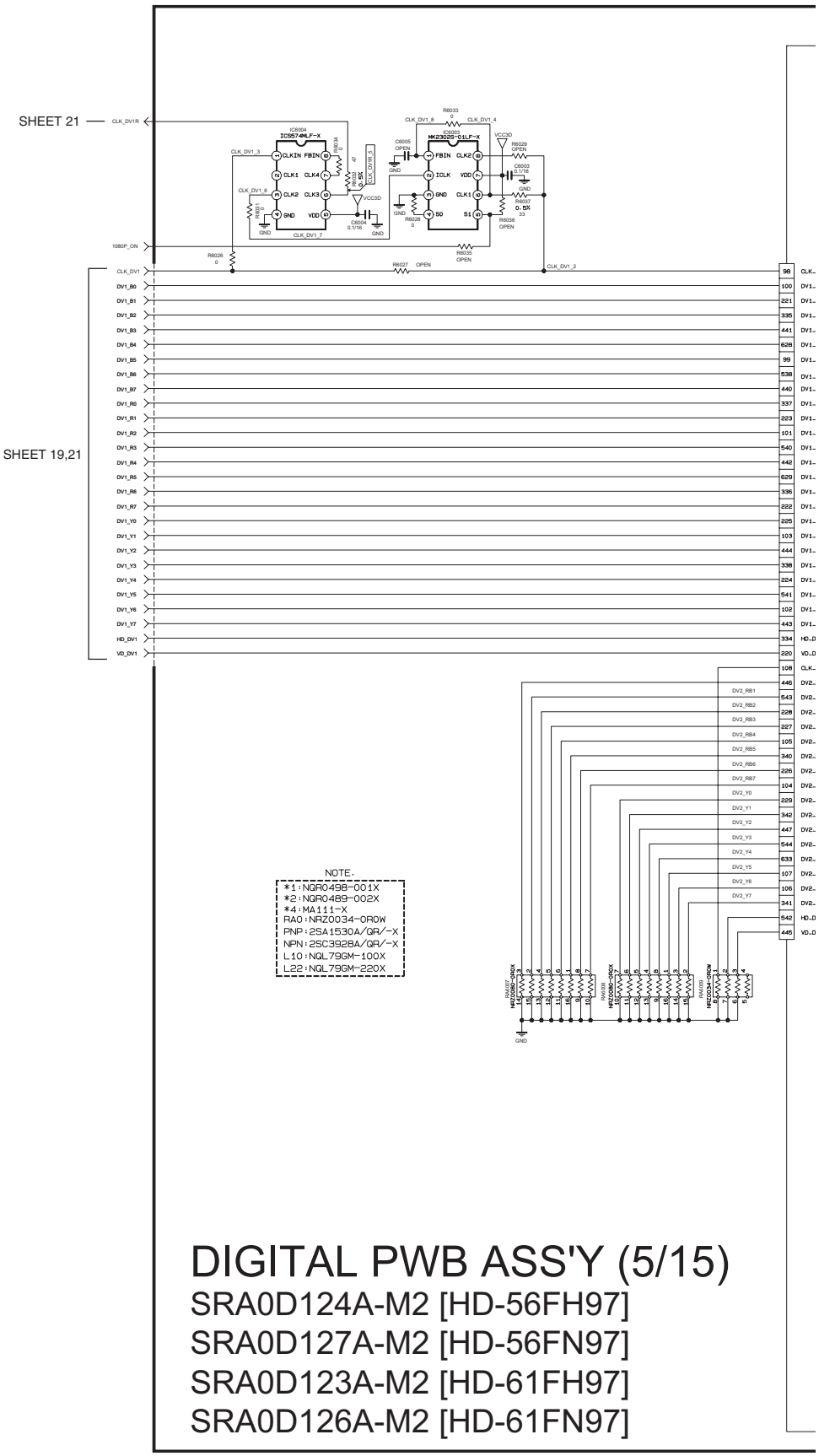

DIGITAL PWB ASS'Y (5/15)

SRA0D124A-M2 [HD-56FH97]
SRA0D127A-M2 [HD-56FN97]
SRA0D123A-M2 [HD-61FH97]
SRA0D126A-M2 [HD-61FN97]

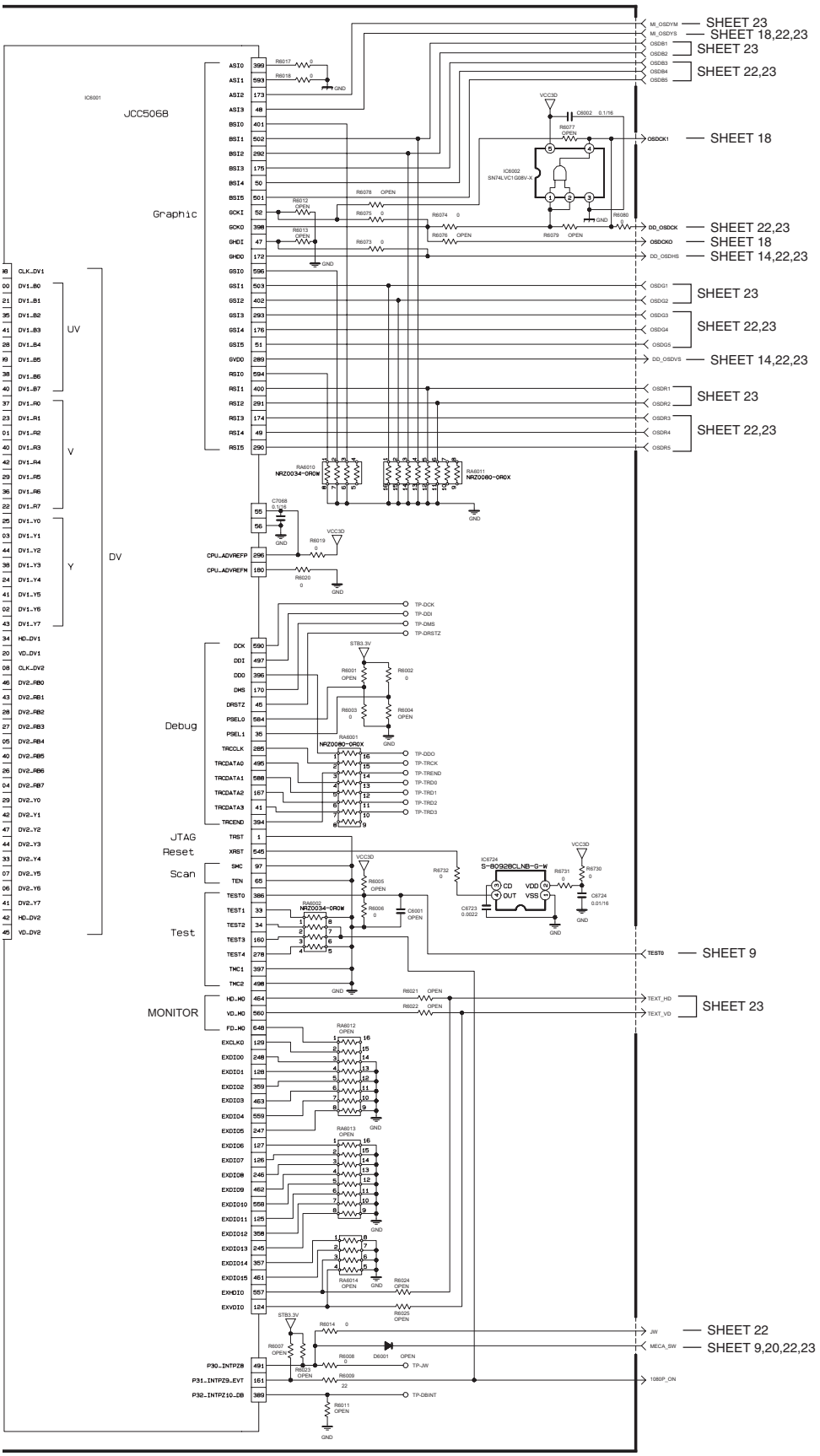

c10502001_0712_2/16_0.0

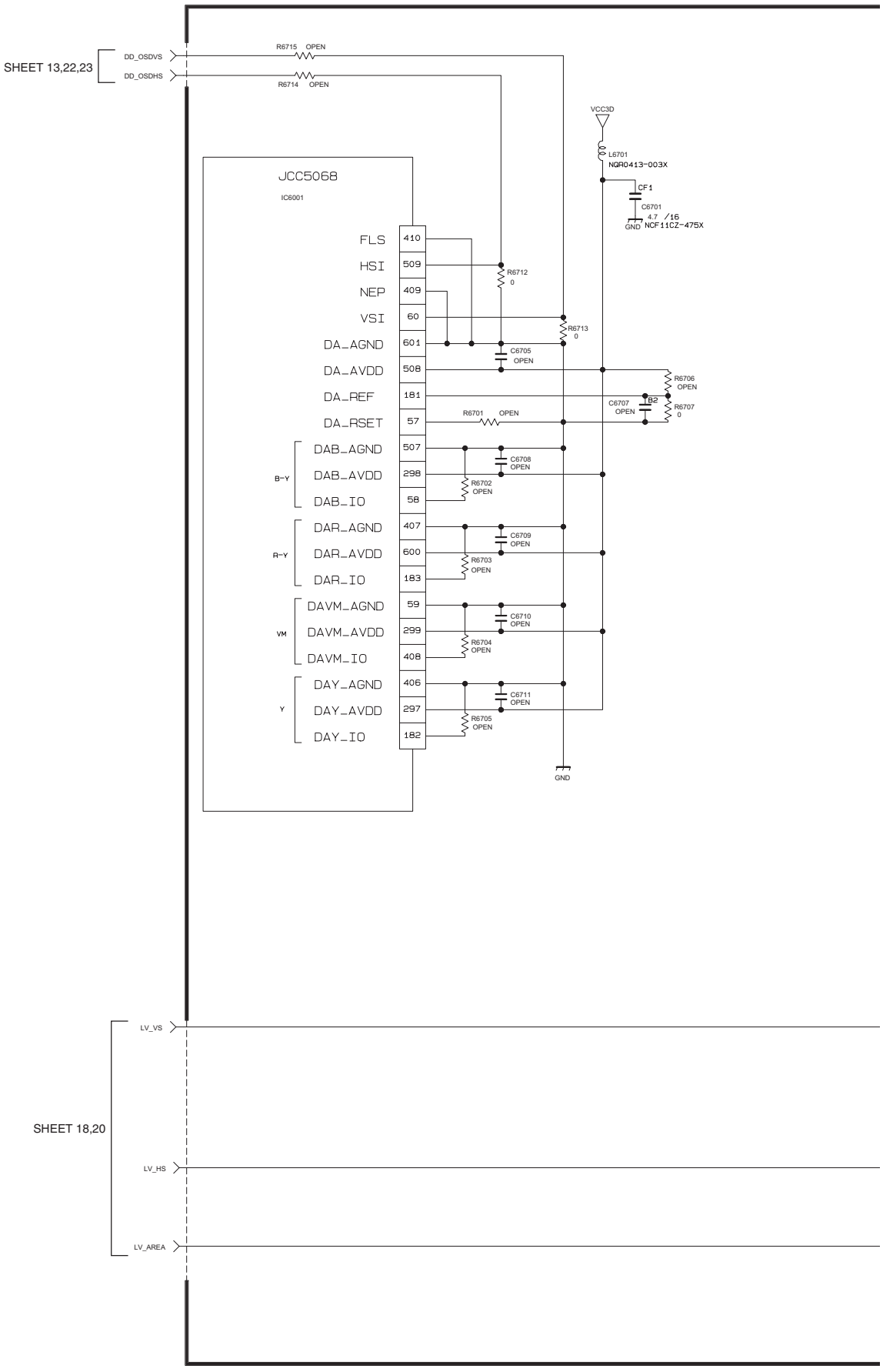
SHEET 13,22,23
DD_OSDVS
DD_OSDHS
R6715 OPEN
R6714 OPEN
VCC3D
L6701
NQR0413-003X
CF1
C6701
4.7 /16
NCF11CZ-475X
GND
JCC5068
IC6001
FLS 410
HSI 509
NEP 409
VSI 60
DA_AGND 601
DA_AVDD 508
DA_REF 181
DA_RSET 57
DAB_AGND 507
DAB_AVDD 298
DAB_IO 58
B-Y
DAR_AGND 407
DAR_AVDD 600
DAR_IO 183
R-Y
DAVM_AGND 59
DAVM_AVDD 299
DAVM_IO 408
VM
DAY_AGND 406
DAY_AVDD 297
DAY_IO 182
Y
R6712 0
R6713 0
C6705 OPEN
R6706 OPEN
C6707 OPEN
B2
R6707 0
R6701 OPEN
C6708 OPEN
R6702 OPEN
C6709 OPEN
R6703 OPEN
C6710 OPEN
R6704 OPEN
C6711 OPEN
R6705 OPEN
GND
SHEET 18,20
LV_VS
LV_HS
LV_AREA

DIGITAL PWB ASS'Y (6/15)

SRA0D124A-M2 [HD-56FH97]
SRA0D127A-M2 [HD-56FN97]
SRA0D123A-M2 [HD-61FH97]
SRA0D126A-M2 [HD-61FN97]

NOTE.

*1:NQR0498-001X
*2:NQR0489-002X
*4:MA111-X
RA0:NRZ0034-0R0W
PNP:2SA1530A/QR/-X
NPN:2SC3928A/QR/-X
L10:NQL79GM-100X
L22:NQL79GM-220X

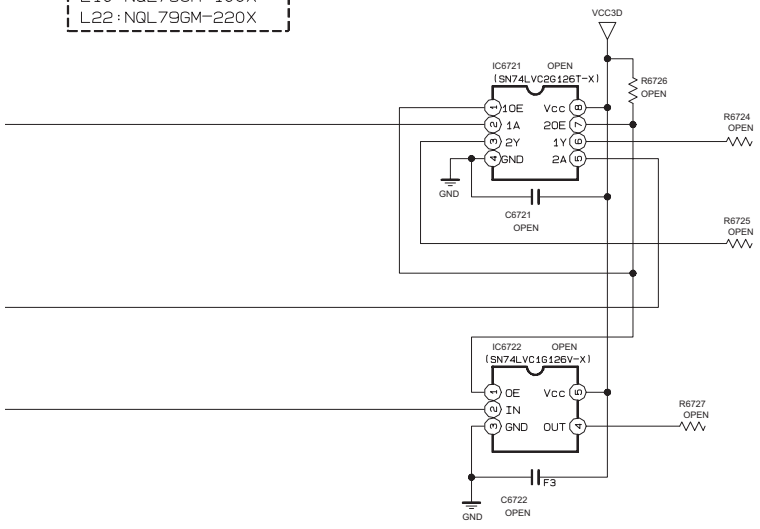

c10502001_0712_5/16_0.0

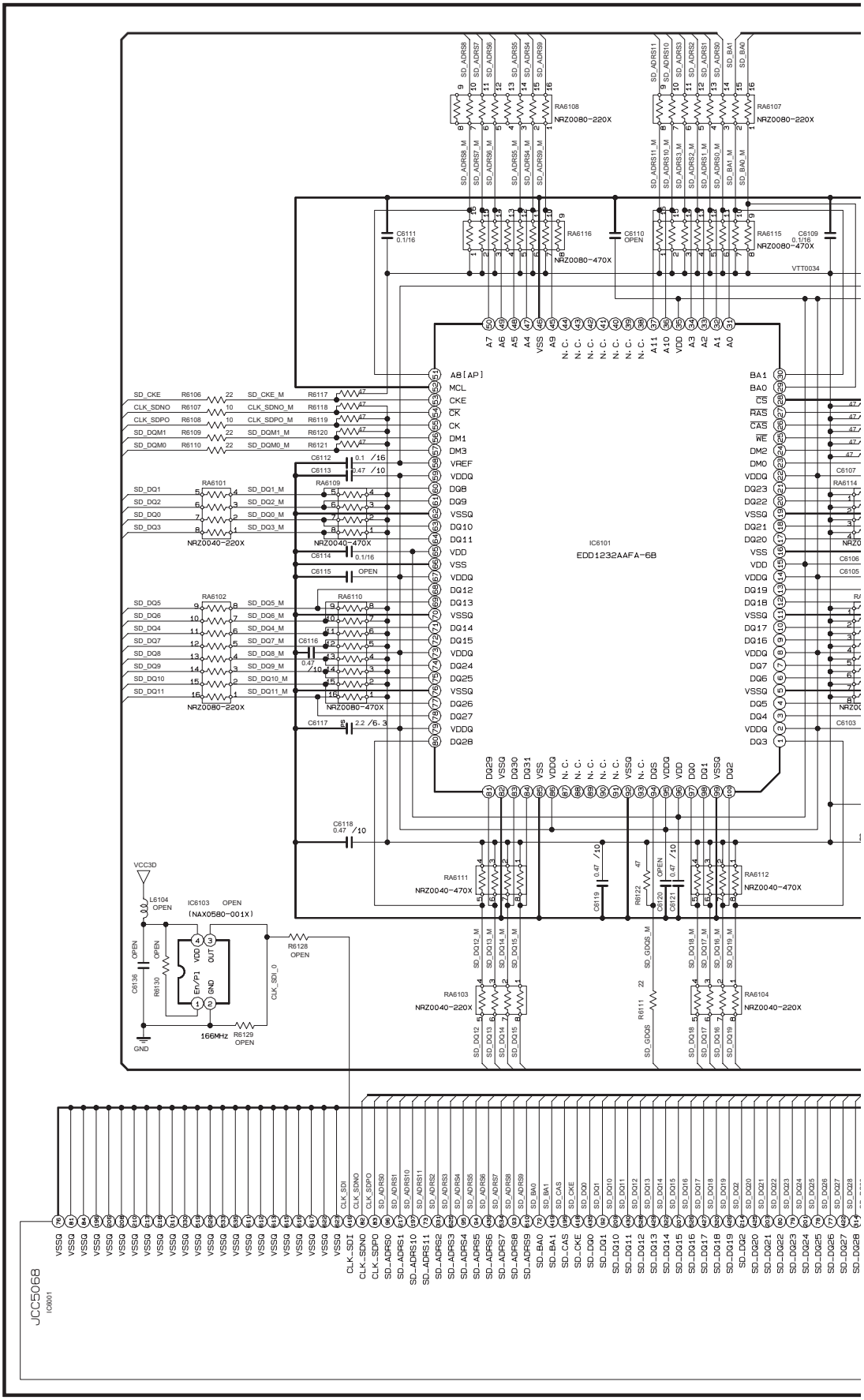
IC6101
EDD1232AAFA-6B
RA6108
NRZ0080-220X
RA6107
NRZ0080-220X
RA6116
NRZ0080-470X
RA6115
NRZ0080-470X
C6110
OPEN
C6111
0.1/16
C6109
0.1/16
VTT0034
RA6101
NRZ0040-220X
RA6109
NRZ0040-470X
RA6102
NRZ0080-220X
RA6110
NRZ0080-470X
RA6111
NRZ0040-470X
RA6112
NRZ0040-470X
RA6103
NRZ0040-220X
RA6104
NRZ0040-220X
C6112
0.1 /16
C6113
0.47 /10
C6114
0.1/16
C6115
OPEN
C6116
0.47 /10
C6117
2.2 /6.3
C6118
0.47 /10
C6119
0.47 /10
C6120
OPEN
C6121
0.47 /10
C6136
OPEN
R6130
OPEN
R6128
OPEN
R6129
OPEN
R6122
47
R6111
22
IC6103 OPEN
(NAX0580-001X)
L6104
OPEN
VCC3D
166MHz
GND
JCC5068
IC6001

DIGITAL PWB ASS'Y (7/15)

SRA0D124A-M2 [HD-56FH97]
SRA0D127A-M2 [HD-56FN97]
SRA0D123A-M2 [HD-61FH97]
SRA0D126A-M2 [HD-61FN97]

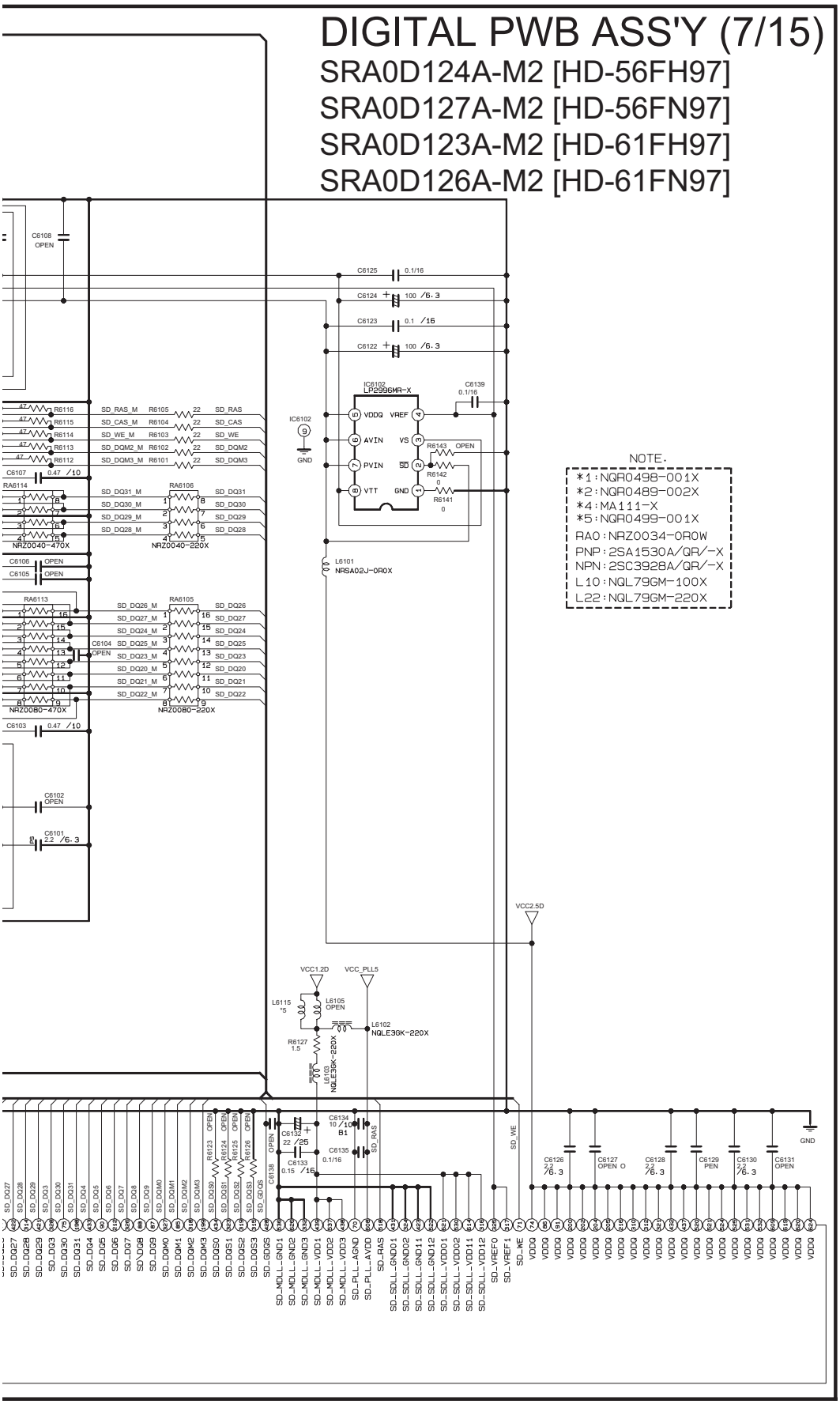

c10502001_0712_3/16_0.0

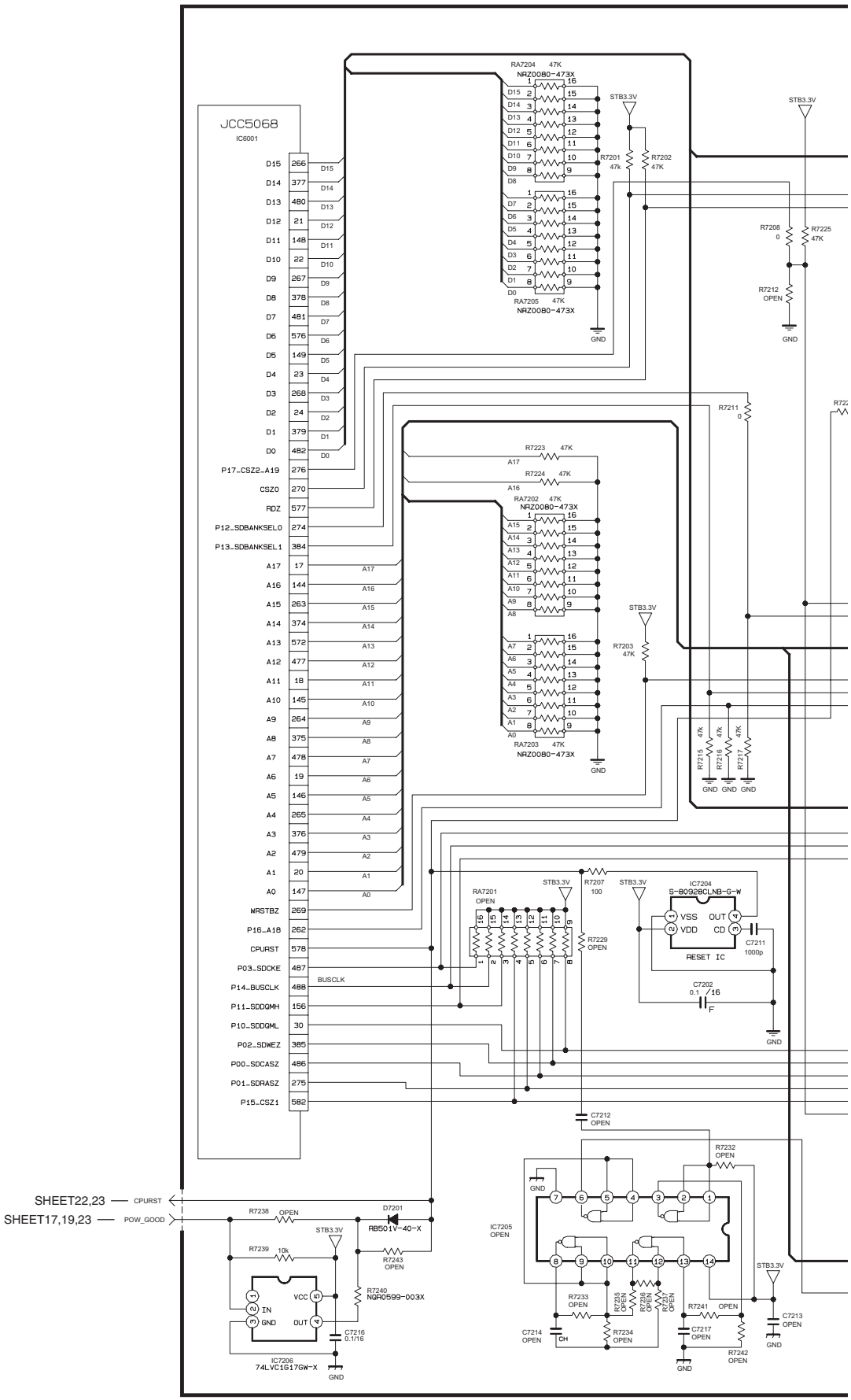
JCC5068
IC6001
RA7204 47K
NRZ0080-473X
RA7205 47K
NRZ0080-473X
RA7202 47K
NRZ0080-473X
RA7203 47K
NRZ0080-473X
RA7201
OPEN
STB3.3V
GND
R7201 47k
R7202 47K
R7203 47K
R7207 100
R7208 0
R7211 0
R7212 OPEN
R7215 47k
R7216 47k
R7217 47K
R7223 47K
R7224 47K
R7225 47K
R7229 OPEN
IC7204
S-80928CLNB-G-W
VSS
VDD
OUT
CD
RESET IC
C7202 0.1 /16 F
C7211 1000p
C7212 OPEN
R7232 OPEN
IC7205 OPEN
R7233 OPEN
R7234 OPEN
R7235 OPEN
R7236 OPEN
R7237 OPEN
R7241 OPEN
R7242 OPEN
C7213 OPEN
C7214 OPEN
C7217 OPEN
D7201
RB501V-40-X
R7238 OPEN
R7239 10k
R7240 NQR0599-003X
R7243 OPEN
IC7206
74LVC1G17GW-X
C7216 0.1/16
P17_CSZ2_A19
CSZ0
RDZ
P12_SDBANKSEL0
P13_SDBANKSEL1
WRSTBZ
P16_A18
CPURST
P03_SDCKE
BUSCLK
P14_BUSCLK
P11_SDDQMH
P10_SDDQML
P02_SDWEZ
P00_SDCASZ
P01_SDRASZ
P15_CSZ1
SHEET22,23 — CPURST
SHEET17,19,23 — POW_GOOD

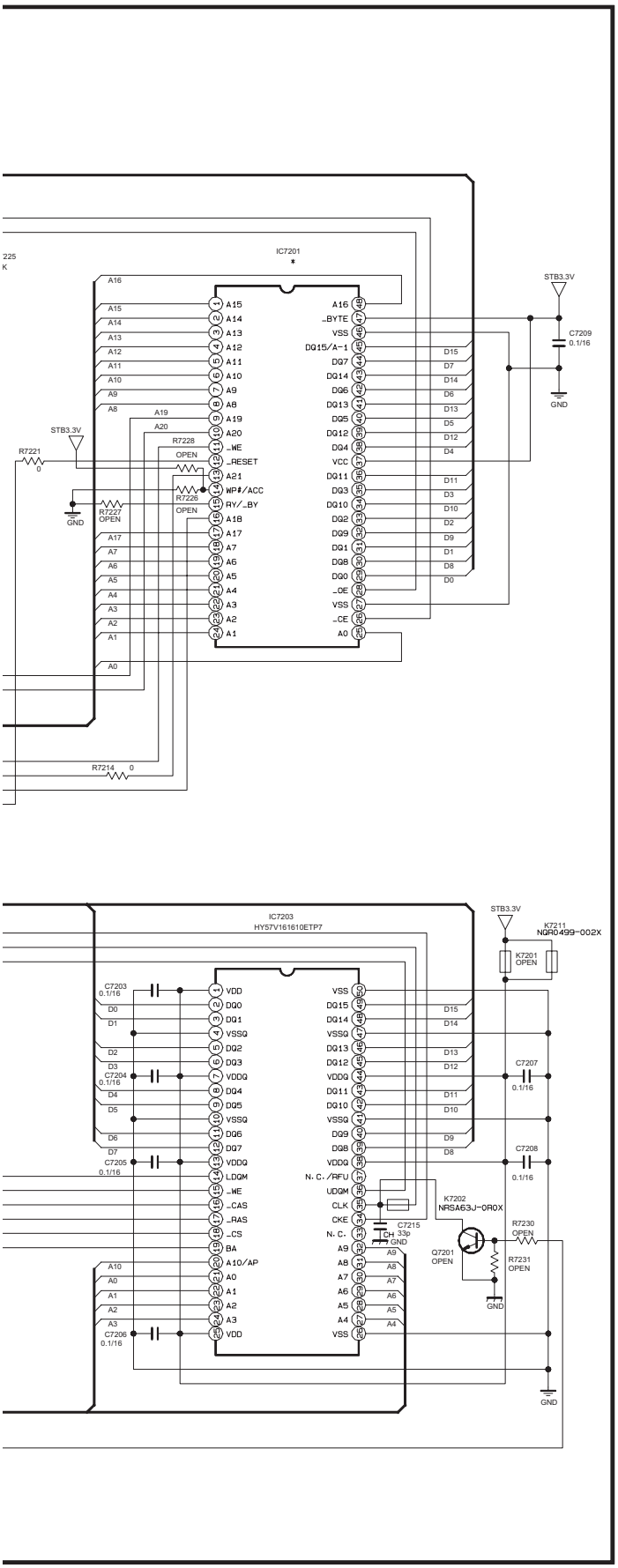

NOTE.

*1:NQR0498-001X
*2:NQR0489-002X
*4:MA111-X
RA0:NRZ0034-0R0W
PNP:2SA1530A/QR/-X
NPN:2SC3928A/QR/-X
L10:NQL79GM-100X
L22:NQL79GM-220X

* DIFFERENCE LIST

	0LLC11103	0LLC11103 -04	0LLC11103 -07
IC7201	39VF800A7 1EKD55	39VF800A7 1EKD55	39VF800A7 1EKD56

DIGITAL PWB ASS'Y (8/15)

SRA0D124A-M2 [HD-56FH97]
SRA0D127A-M2 [HD-56FN97]
SRA0D123A-M2 [HD-61FH97]
SRA0D126A-M2 [HD-61FN97]

c10502001_0712_8/16_0.0

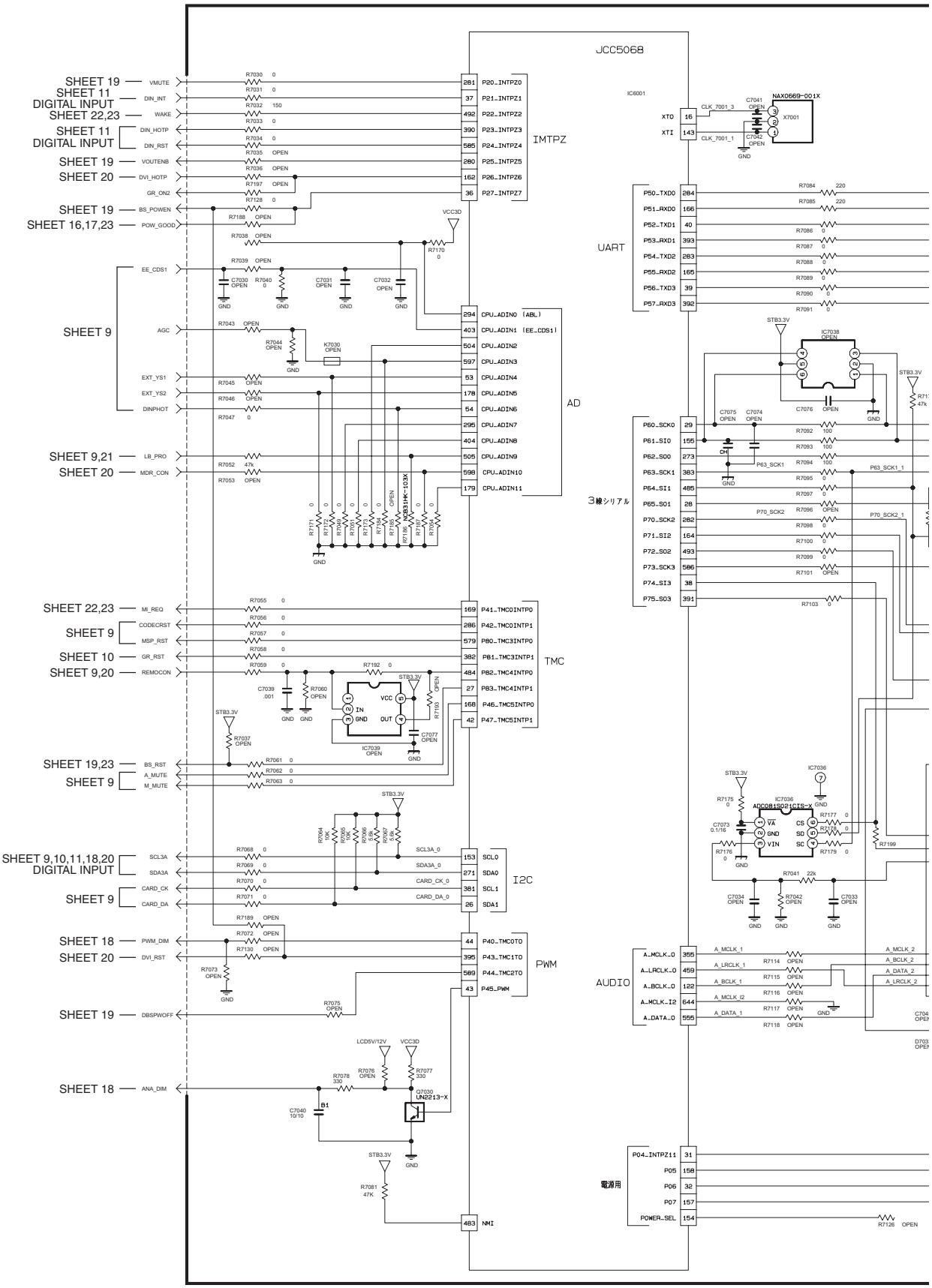
JCC5068
IMTPZ
AD
TMC
I2C
PWM
UART
AUDIO
3線シリアル
電源用
SHEET 19
SHEET 11
DIGITAL INPUT
SHEET 22,23
SHEET 20
SHEET 16,17,23
SHEET 9
SHEET 9,21
SHEET 10
SHEET 9,20
SHEET 19,23
SHEET 18
VMUTE
DIN_INT
WAKE
DIN_HOTP
DIN_RST
VOUTENB
DVI_HOTP
GR_ON2
BS_POWEN
POW_GOOD
EE_CDS1
AGC
EXT_YS1
EXT_YS2
DINPHOT
LB_PRO
MDR_CON
MI_REQ
CODECRST
MSP_RST
GR_RST
REMOCON
BS_RST
A_MUTE
M_MUTE
SCL3A
SDA3A
CARD_CK
CARD_DA
PWM_DIM
DVI_RST
DBSPWOFF
ANA_DIM
P20_INTPZ0
P21_INTPZ1
P22_INTPZ2
P23_INTPZ3
P24_INTPZ4
P25_INTPZ5
P26_INTPZ6
P27_INTPZ7
CPU_ADIN0 (ABL)
CPU_ADIN1 (EE_CDS1)
CPU_ADIN2
CPU_ADIN3
CPU_ADIN4
CPU_ADIN5
CPU_ADIN6
CPU_ADIN7
CPU_ADIN8
CPU_ADIN9
CPU_ADIN10
CPU_ADIN11
P41_TMC0INTP0
P42_TMC0INTP1
P80_TMC3INTP0
P81_TMC3INTP1
P82_TMC4INTP0
P83_TMC4INTP1
P46_TMC5INTP0
P47_TMC5INTP1
SCL3A_0
SDA3A_0
CARD_CK_0
CARD_DA_0
SCL0
SDA0
SCL1
SDA1
P40_TMC0TO
P43_TMC1TO
P44_TMC2TO
P45_PWM
NMI
P50_TXD0
P51_RXD0
P52_TXD1
P53_RXD1
P54_TXD2
P55_RXD2
P56_TXD3
P57_RXD3
P60_SCK0
P61_SI0
P62_SO0
P63_SCK1
P64_SI1
P65_SO1
P70_SCK2
P71_SI2
P72_SO2
P73_SCK3
P74_SI3
P75_SO3
P04_INTPZ11
P05
P06
P07
POWER_SEL
A_MCLK_0
A_LRCLK_0
A_BCLK_0
A_MCLK_I2
A_DATA_0
A_MCLK_1
A_LRCLK_1
A_BCLK_1
A_MCLK_I2
A_DATA_1
A_MCLK_2
A_BCLK_2
A_DATA_2
A_LRCLK_2
XT0
XTI
NAX0669-001X
X7001
IC6001
IC7038
IC7039
IC7036
ADC081S021CIS-X
K7030
B51HK-103X
LN0213-X
STB3.3V
VCC3D
LCD5V/12V
GND

DIGITAL PWB ASS'Y (9/15)

SRA0D124A-M2 [HD-56FH97]
SRA0D127A-M2 [HD-56FN97]
SRA0D123A-M2 [HD-61FH97]
SRA0D126A-M2 [HD-61FN97]

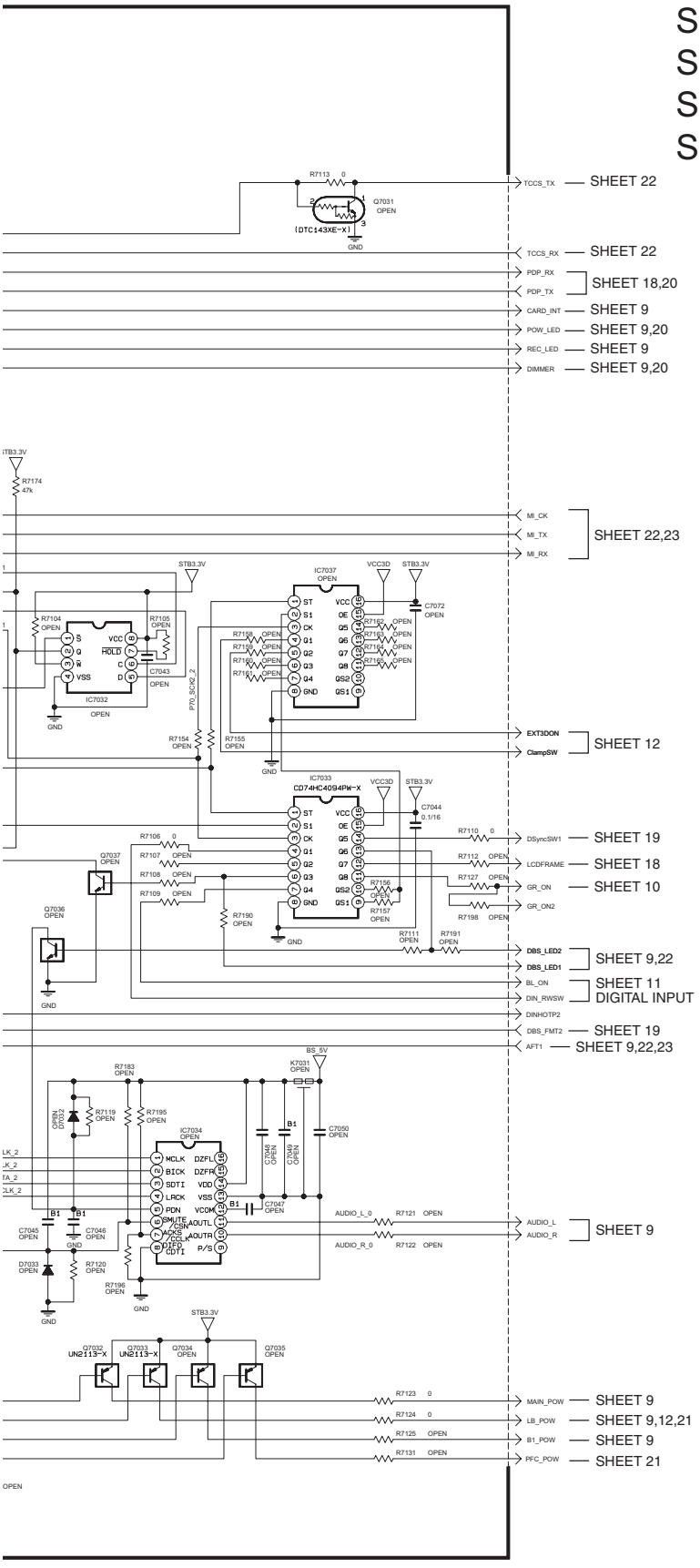

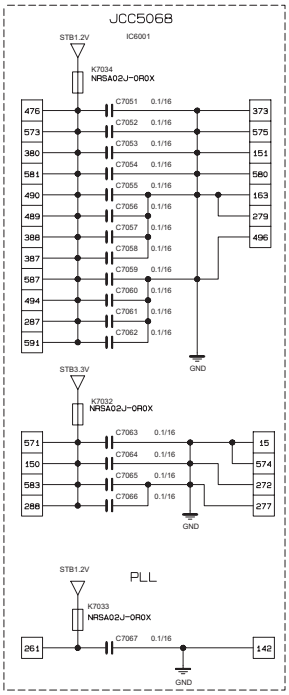

NOTE.

*1:NQR0498-001X
*2:NQR0489-002X
*4:MA111-X
RA0:NRZ0034-0R0W
PNP:2SA1530A/QR/-X
NPN:2SC3928A/QR/-X
L10:NQL79GM-100X
L22:NQL79GM-220X

c10502001_0712_9/16_0.0

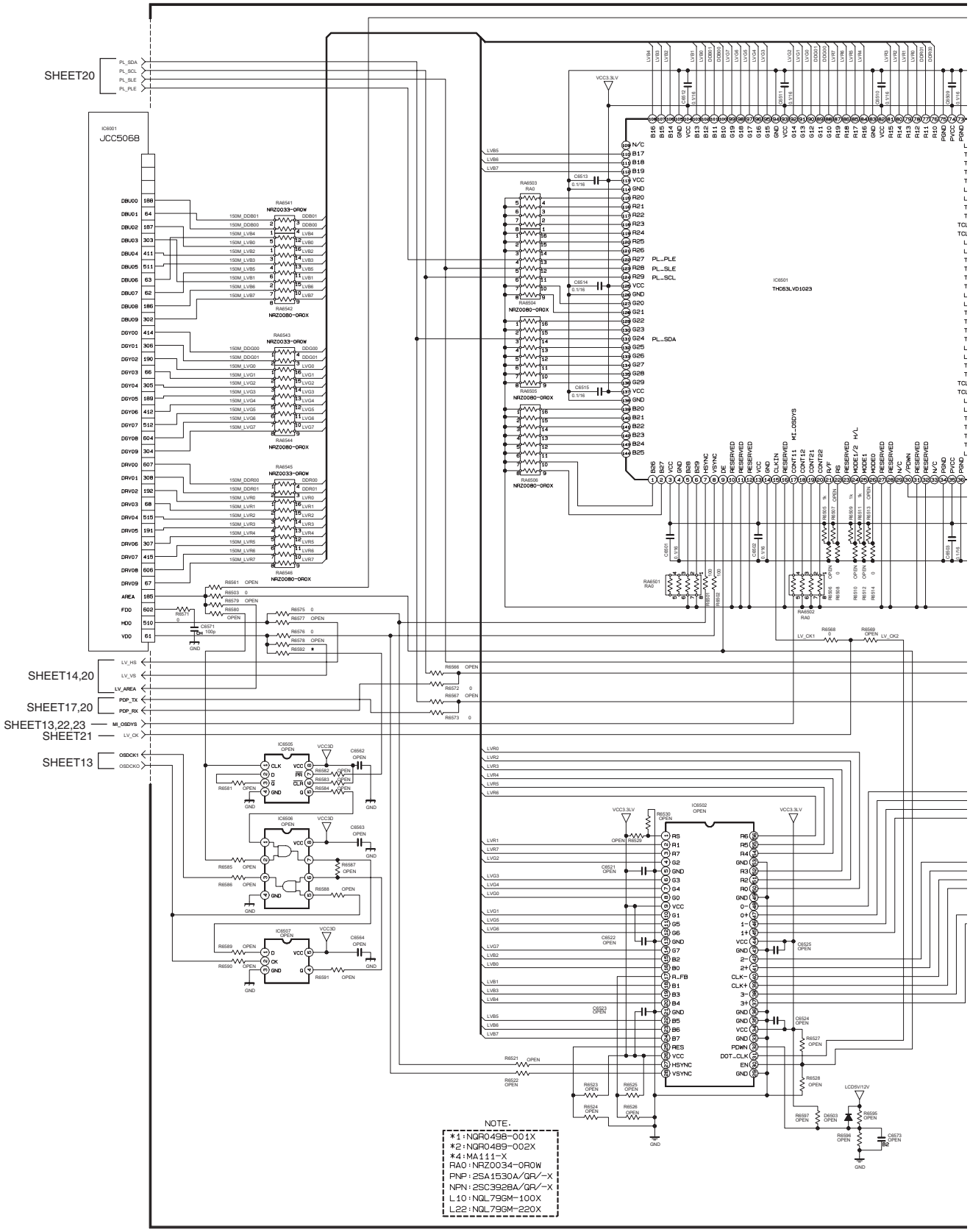
SHEET20
PL_SDA
PL_SCL
PL_SLE
PL_PLE
IC6001
JCC5068
SHEET14,20
LV_HS
LV_VS
LV_AREA
SHEET17,20
PDP_TX
PDP_RX
SHEET13,22,23
MI_OSDYS
SHEET21
LV_CK
SHEET13
OSDCK1
OSDCKO
IC6601
THC63LVD1023
NOTE.
*1:NQR0498-001X
*2:NQR0489-002X
*4:MA111-X
RA0:NRZ0034-0R0W
PNP:2SA1530A/QR/-X
NPN:2SC3928A/QR/-X
L10:NQL79GM-100X
L22:NQL79GM-220X

DIGITAL PWB ASS'Y (10/15)

SRA0D124A-M2 [HD-56FH97]
SRA0D127A-M2 [HD-56FN97]
SRA0D123A-M2 [HD-61FH97]
SRA0D126A-M2 [HD-61FN97]

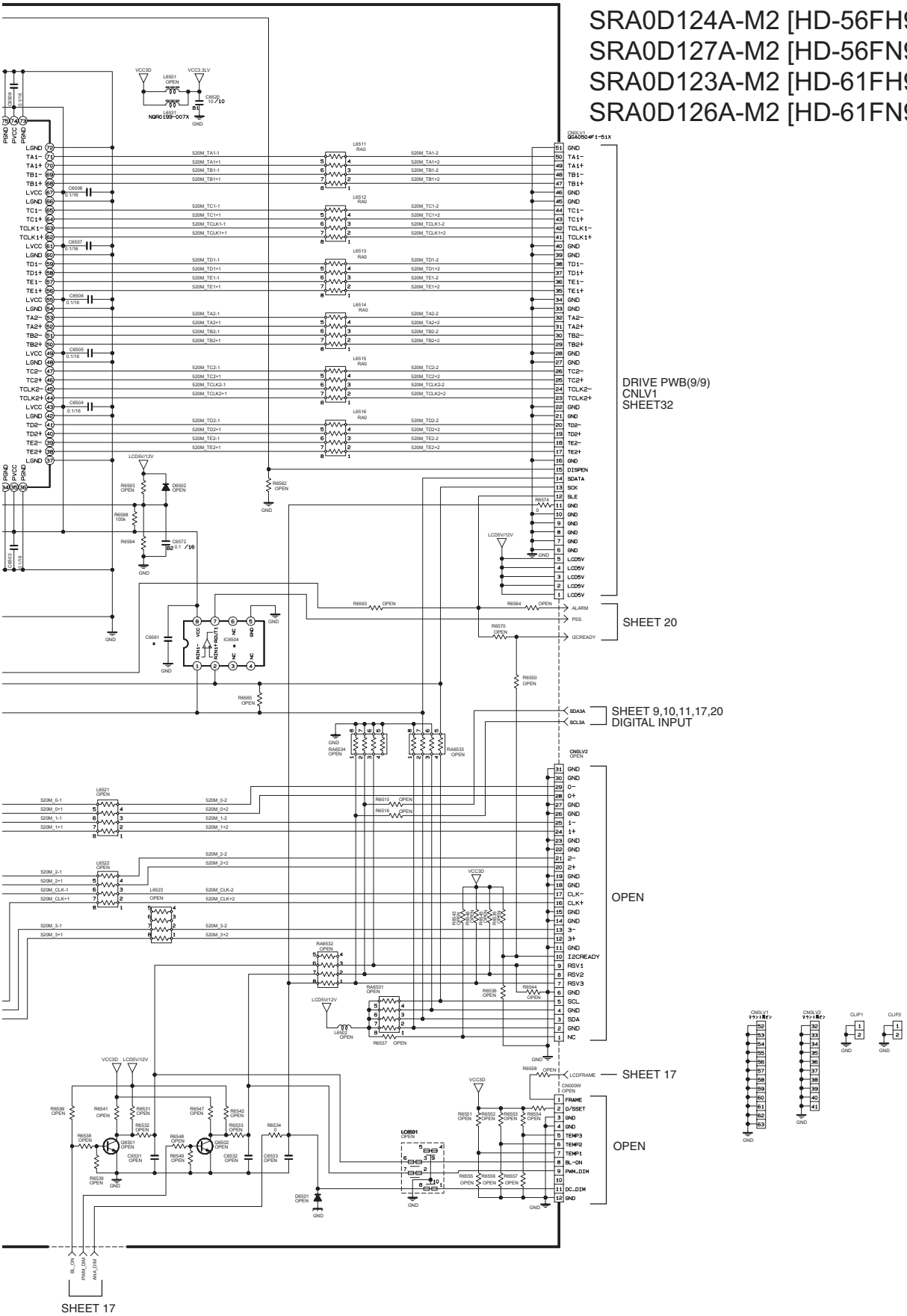

c10502001_0712_4/16_0.0

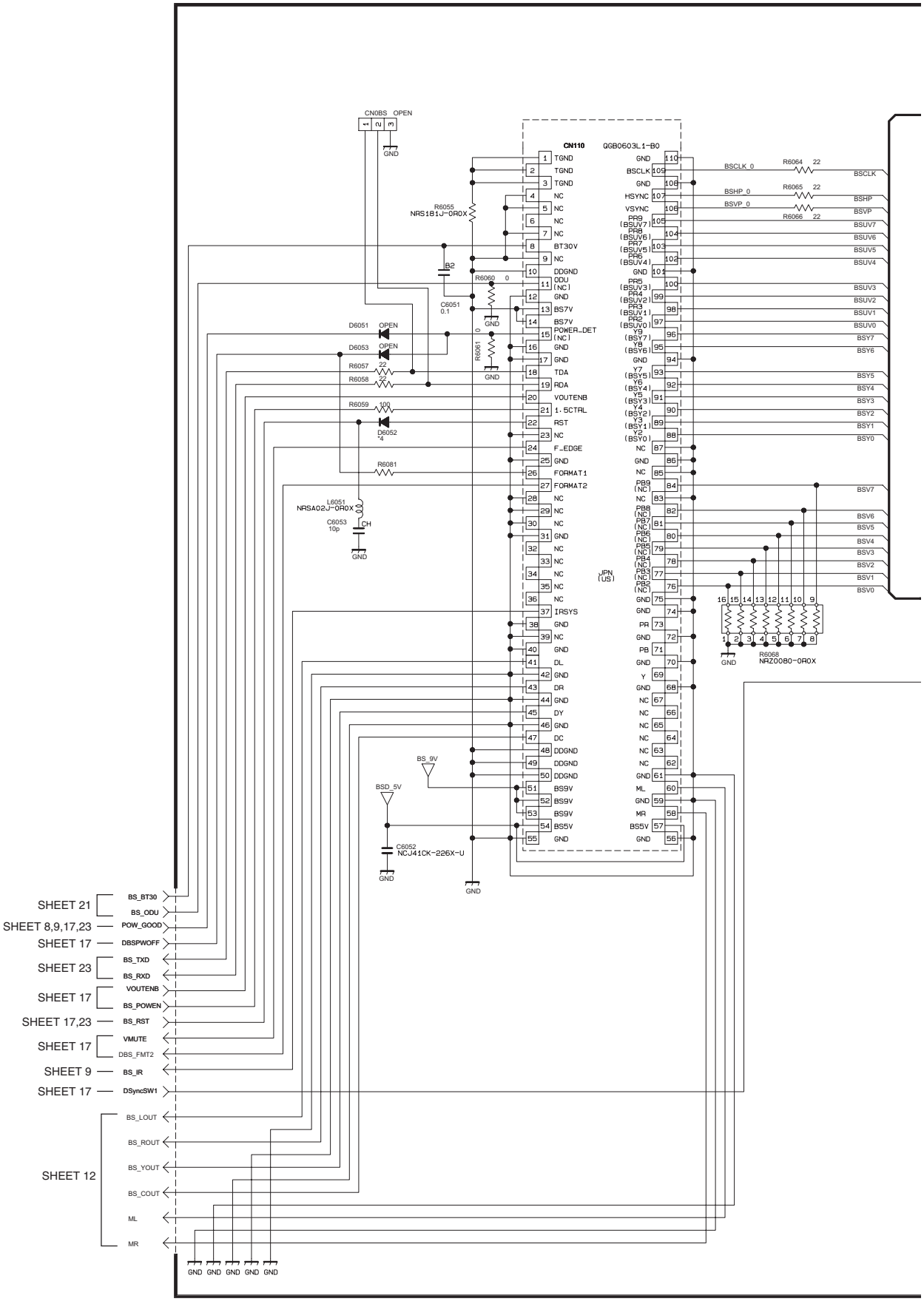
CN0BS OPEN
CN110
QGB0603L1-B0
R6055 NRS181J-0R0X
R6060 0
C6051 0.1
D6051 OPEN
D6053 OPEN
R6057 22
R6058 22
R6059 100
D6052 *4
R6081
L6051 NRSA02J-0R0X
C6053 10p
R6061 0
C6052 NCJ41CK-226X-U
BS_9V
BSD_5V
R6064 22
R6065 22
R6066 22
BSCLK_0
BSHP_0
BSVP_0
R6068 NRZ0080-0R0X
SHEET 21
SHEET 8,9,17,23
SHEET 17
SHEET 23
SHEET 17
SHEET 17,23
SHEET 17
SHEET 9
SHEET 17
SHEET 12
BS_BT30
BS_ODU
POW_GOOD
DBSPWOFF
BS_TXD
BS_RXD
VOUTENB
BS_POWEN
BS_RST
VMUTE
DBS_FMT2
BS_IR
DSyncSW1
BS_LOUT
BS_ROUT
BS_YOUT
BS_COUT
ML
MR
GND

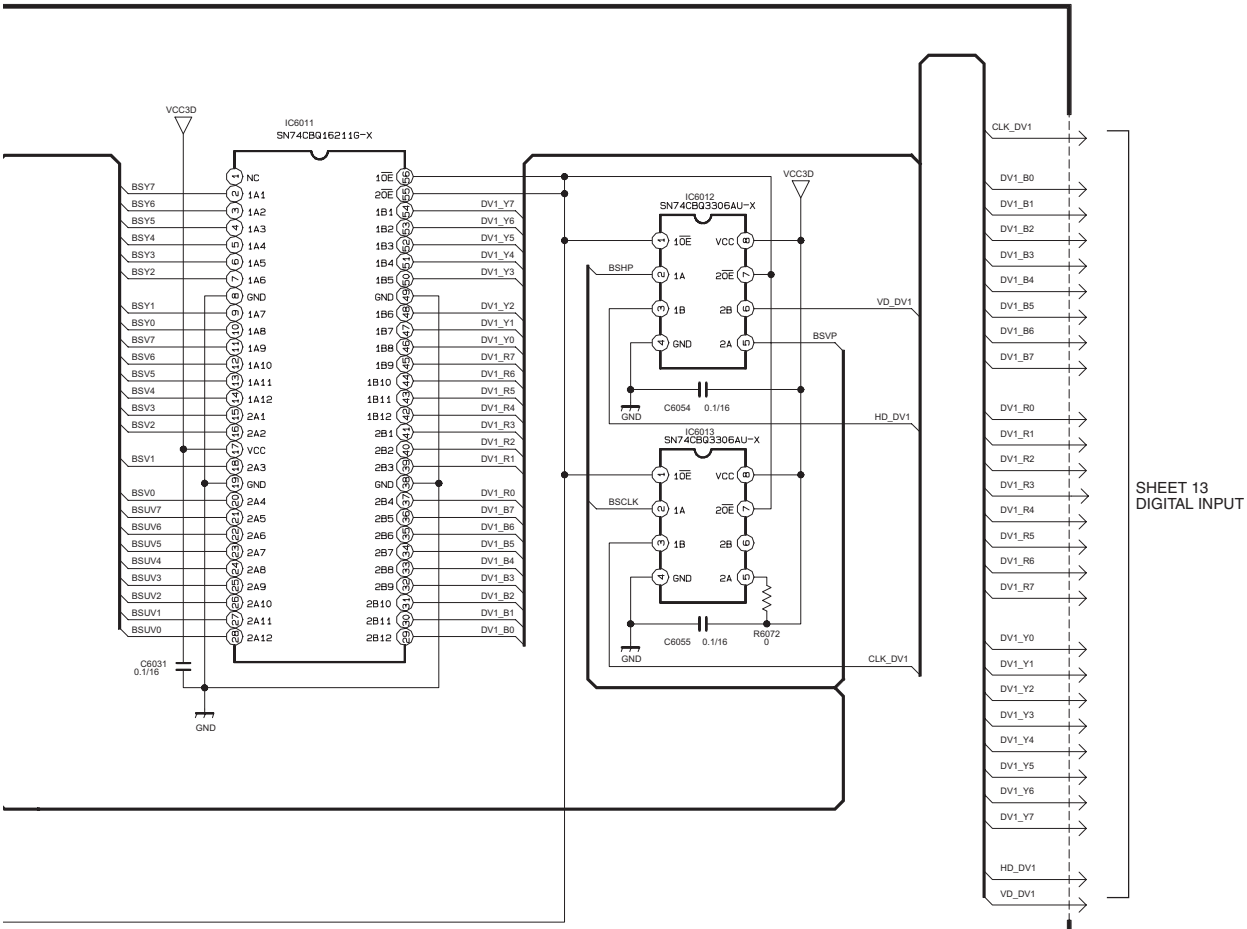

NOTE.

*1:NQR0498-001X
*2:NQR0489-002X
*4:MA111-X
*5:NQR0499-001X
RA0:NRZ0034-0R0W
PNP:2SA1530A/QR/-X
NPN:2SC3928A/QR/-X
L10:NQL79GM-100X
L22:NQL79GM-220X

DIGITAL PWB ASS'Y (11/15)

SRA0D124A-M2 [HD-56FH97]
SRA0D127A-M2 [HD-56FN97]
SRA0D123A-M2 [HD-61FH97]
SRA0D126A-M2 [HD-61FN97]

c10502001_0712_13/16_0.0

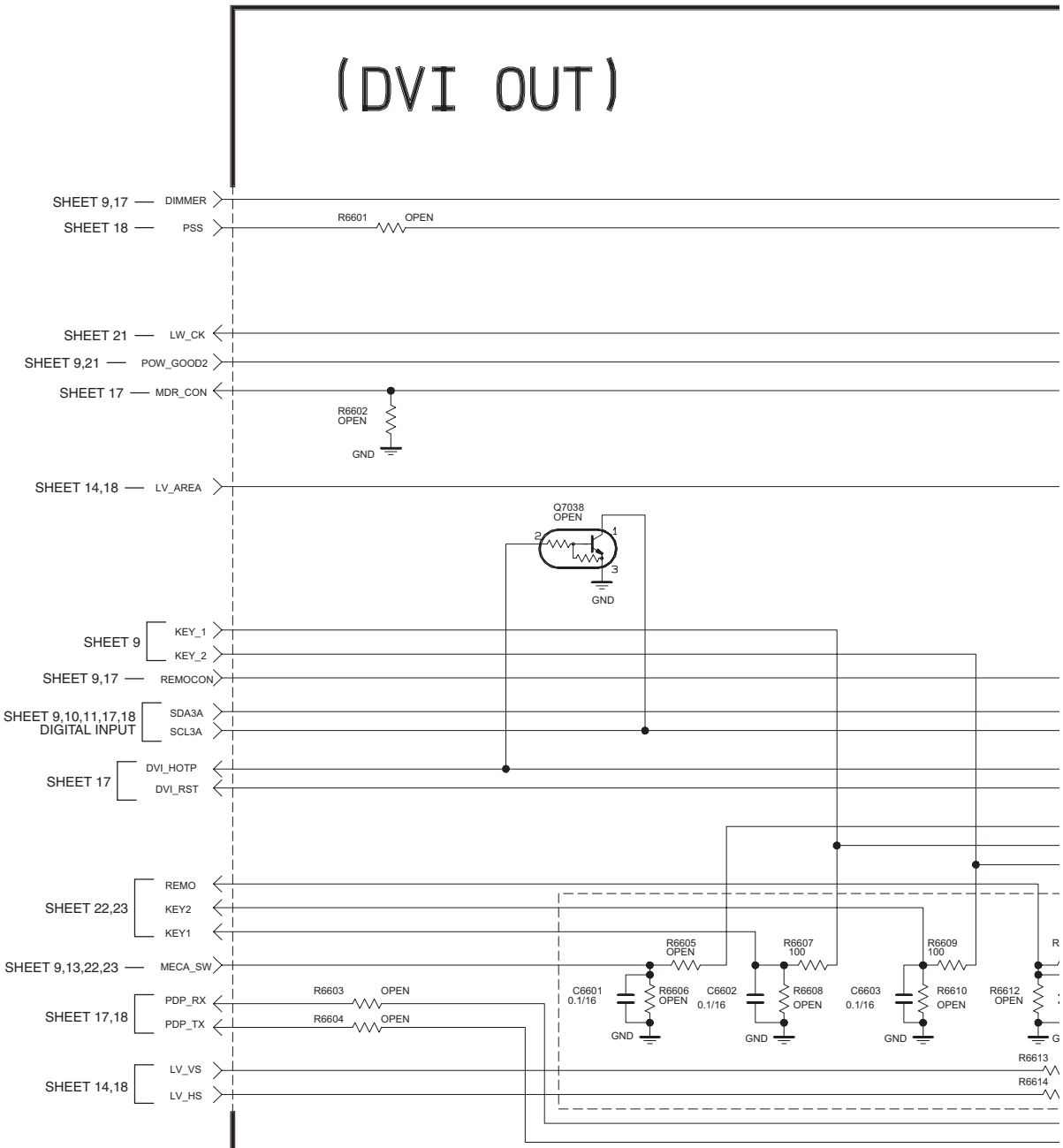

DIGITAL PWB ASS'Y (12/15)

SRA0D124A-M2 [HD-56FH97]
SRA0D127A-M2 [HD-56FN97]
SRA0D123A-M2 [HD-61FH97]
SRA0D126A-M2 [HD-61FN97]

NOTE.

*1 : NQR0498-001X
*2 : NQR0489-002X
*4 : MA111-X
RA0 : NRZ0034-0R0W
PNP : 2SA1530A/QR/-X
NPN : 2SC3928A/QR/-X
L10 : NQL79GM-100X
L22 : NQL79GM-220X

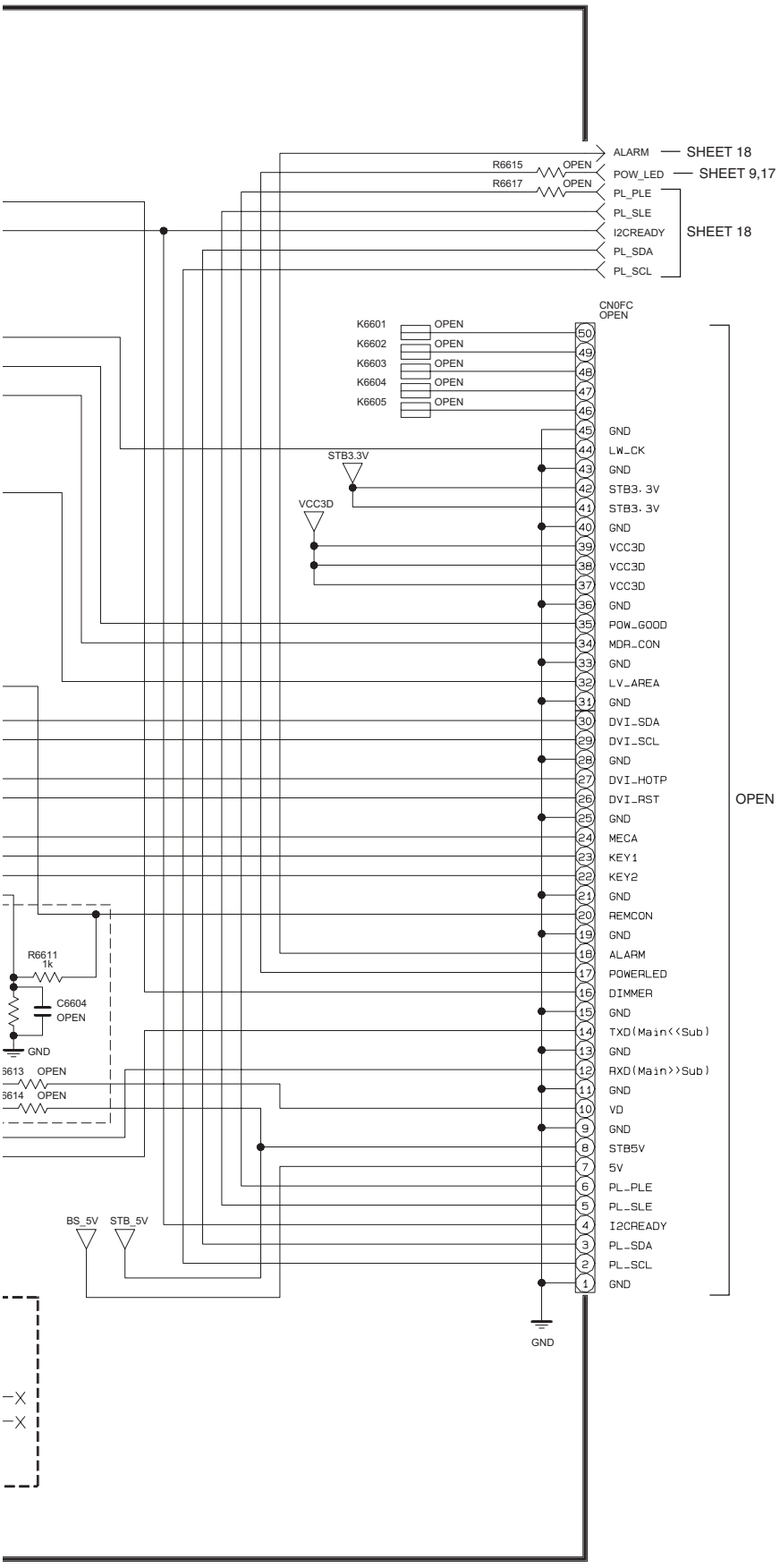

c10502001_0712_12/16_0.0

DIGITAL PWB ASS'Y (13/15)

SRA0D124A-M2 [HD-56FH97]
SRA0D127A-M2 [HD-56FN97]
SRA0D123A-M2 [HD-61FH97]
SRA0D126A-M2 [HD-61FN97]

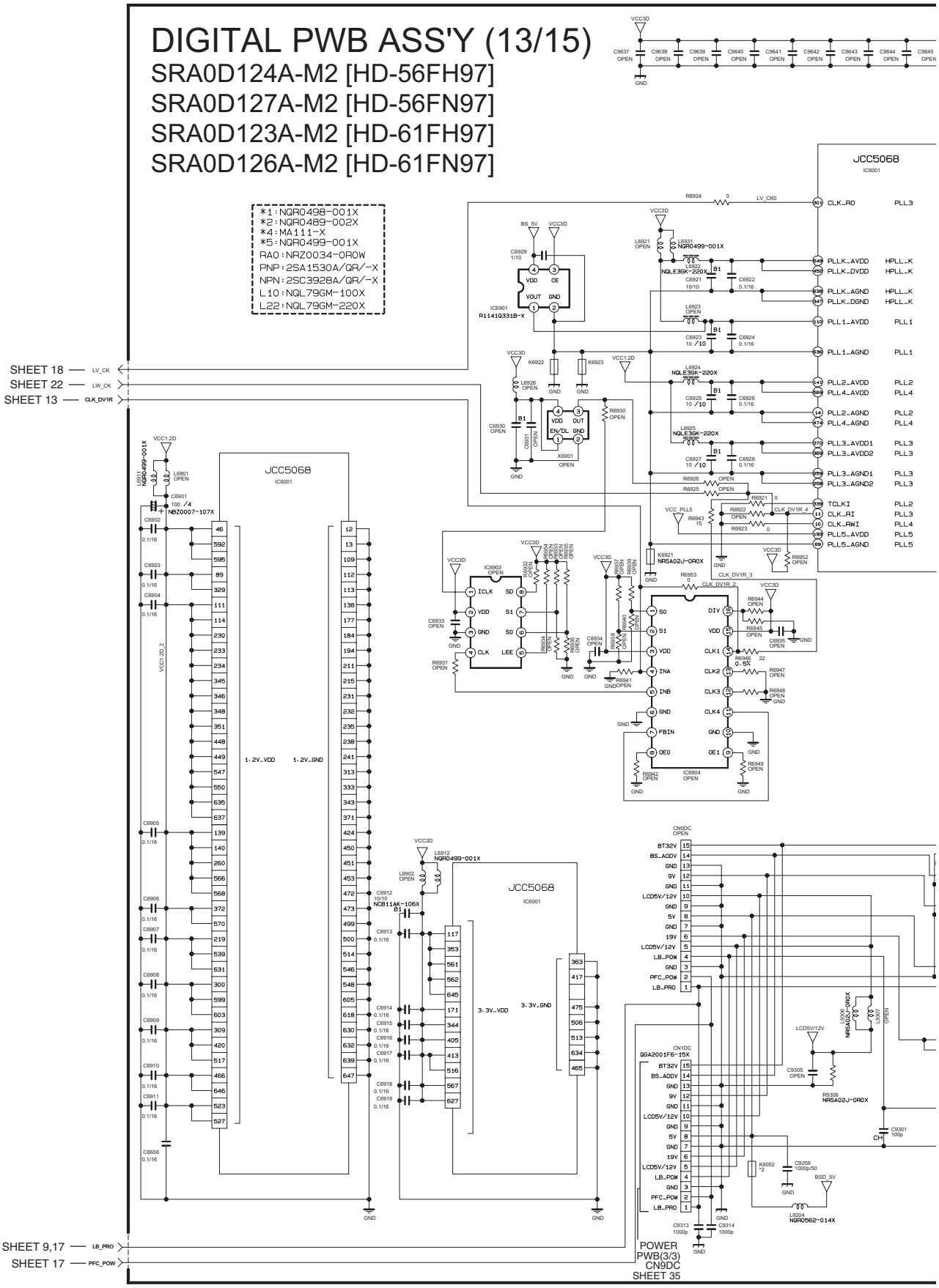

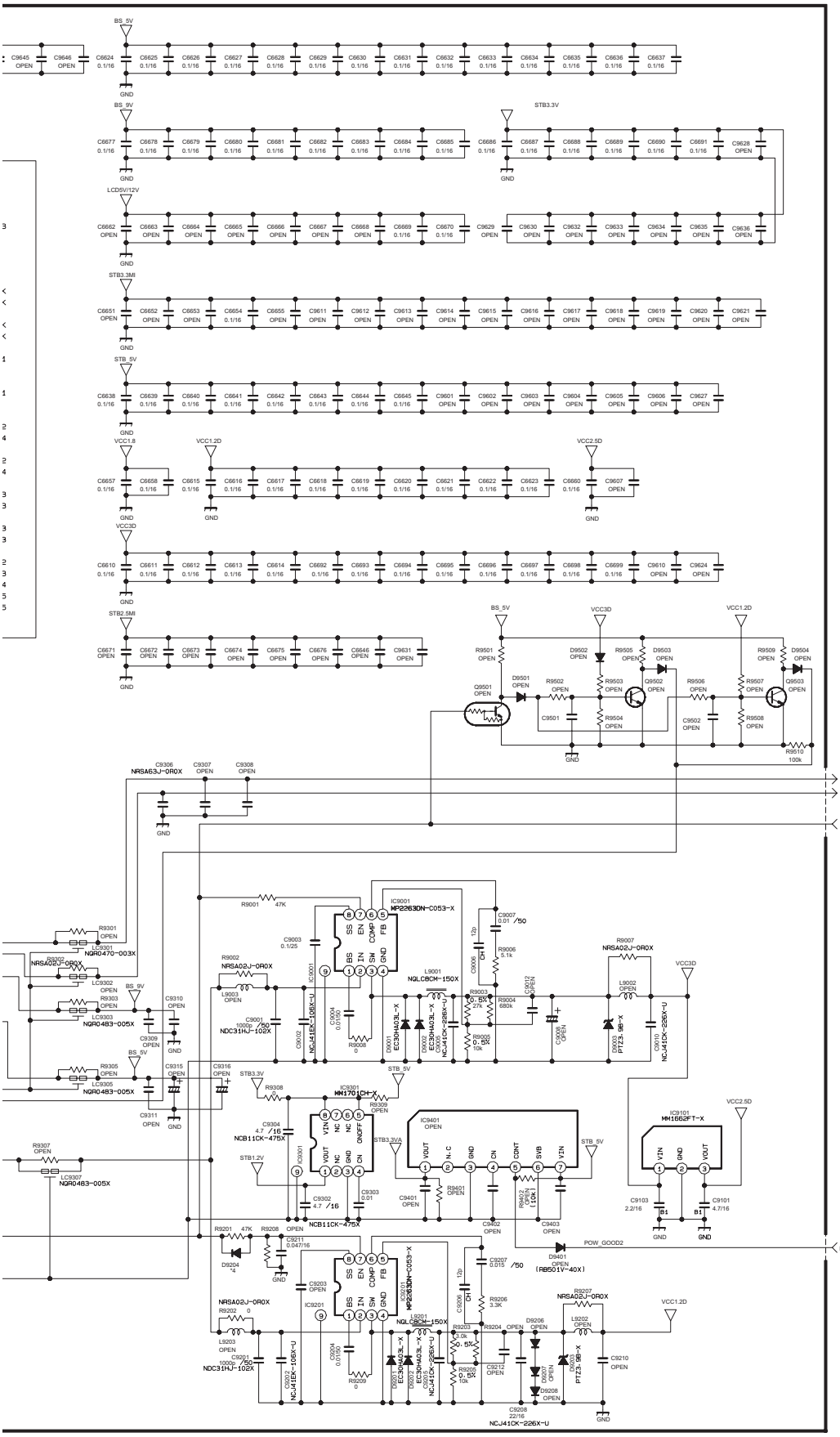

c10502001_0712_10/16_0.0

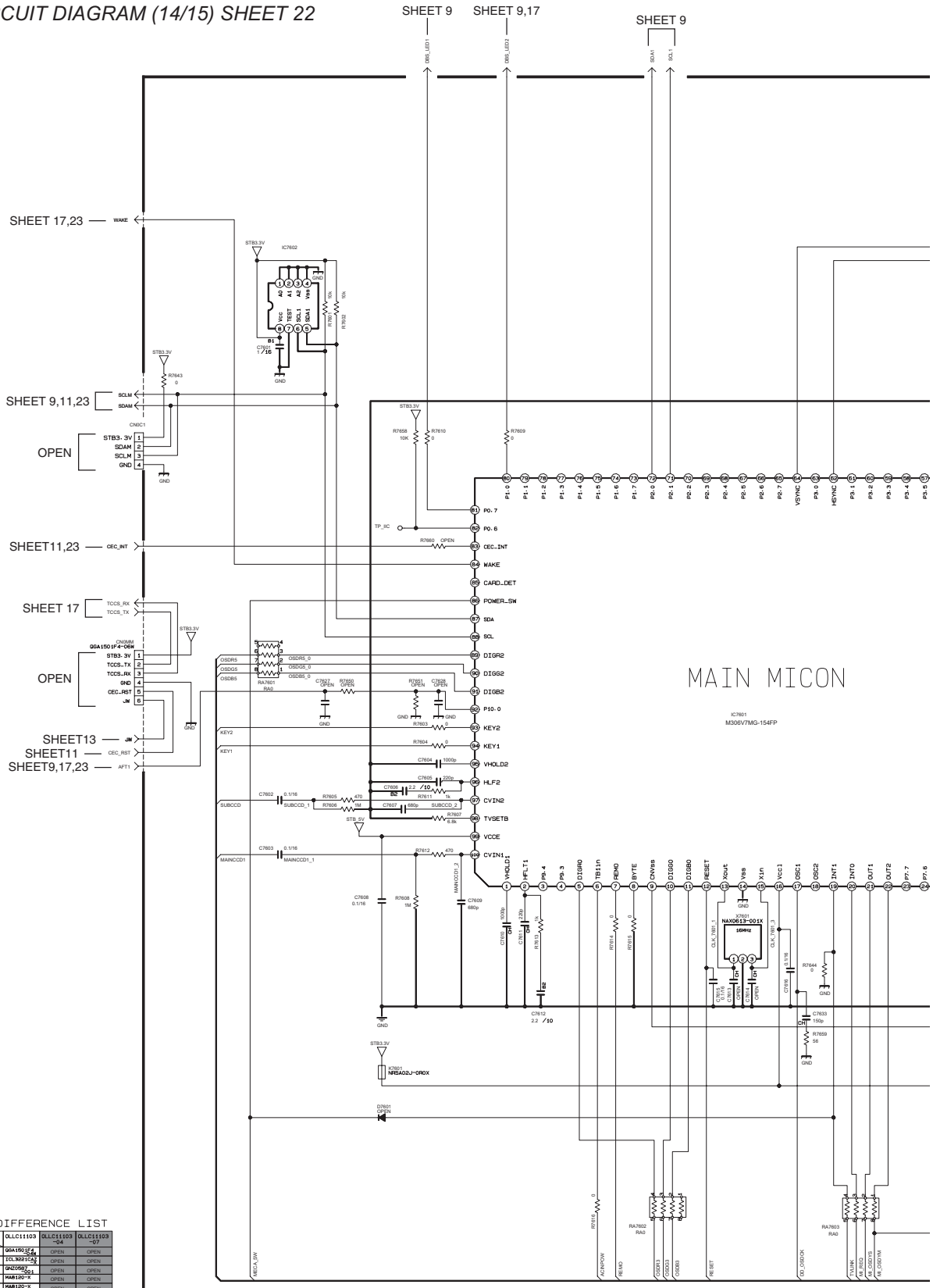

* DIFFERENCE LIST

	QLLC11103	QLLC11103 -04	QLLC11103 -07
CN23/25W	G0A1501F4-06W	OPEN	OPEN
IC7607	ICL3221CAZ	OPEN	OPEN
J7601	GNZ0563-001	OPEN	OPEN
D7604	MA8120-X	OPEN	OPEN
D7605	MA8120-X	OPEN	OPEN
D7606	MA8120-X	OPEN	OPEN
D7607	MA8120-X	OPEN	OPEN
R7636	1k	OPEN	OPEN
R7637	1k	OPEN	OPEN
R7639	10k	OPEN	OPEN
R7640	10k	OPEN	OPEN
R7652	0	OPEN	OPEN
R7653	0	OPEN	OPEN
C7622	0.1/16	OPEN	OPEN
C7623	0.1/16	OPEN	OPEN
C7624	0.1/16	OPEN	OPEN
C7626	0.1/16	OPEN	OPEN
C7629	10/10	OPEN	OPEN

DIGITAL PWB ASS'Y (14/15)

SRA0D124A-M2 [HD-56FH97] SRA0D127A-M2 [HD-56FN
SRA0D123A-M2 [HD-61FH97] SRA0D126A-M2 [HD-61FN

NOTE : Refer to the part list for the part number of IC7602.

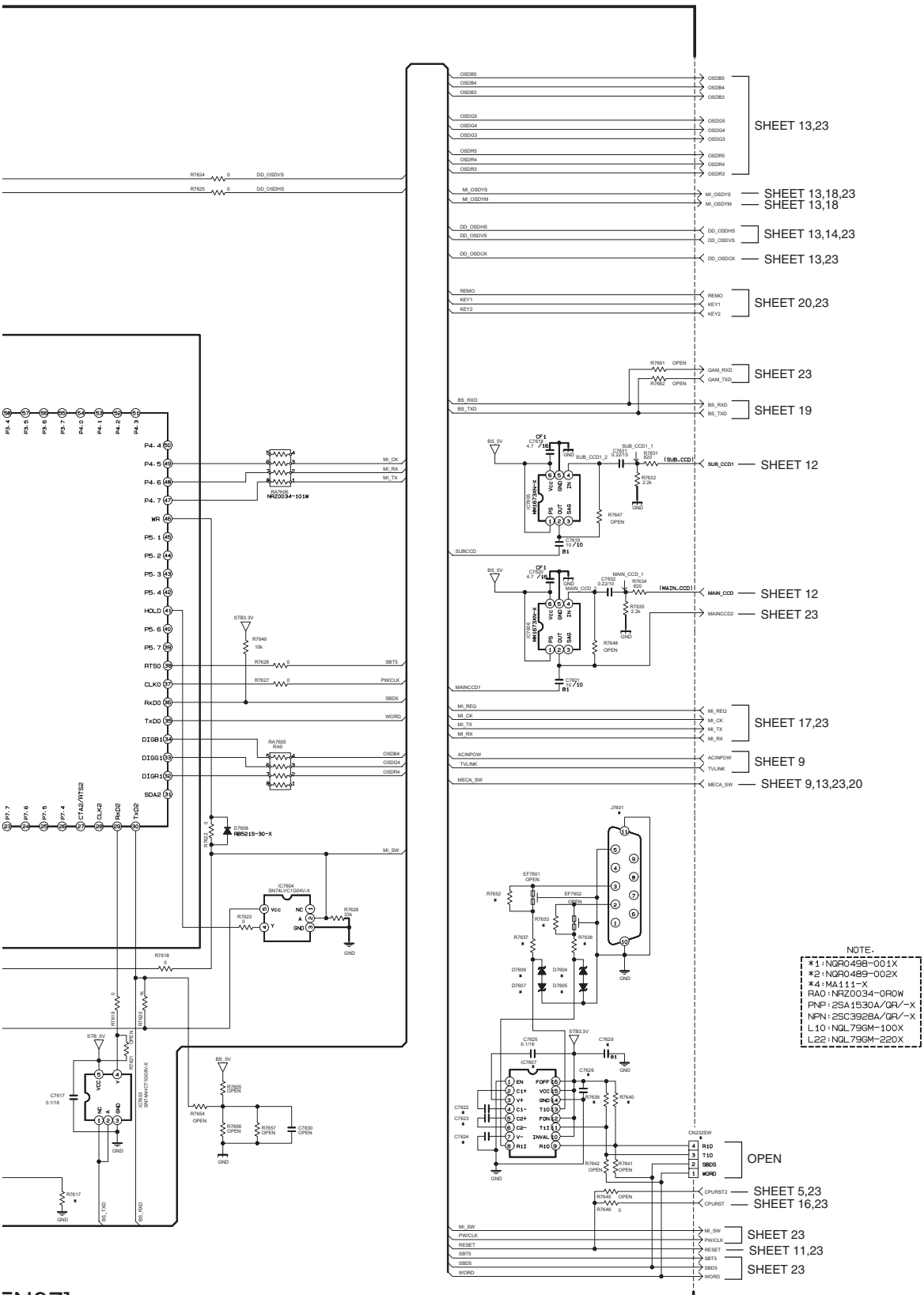

c10502001_0712_6/16_0.0

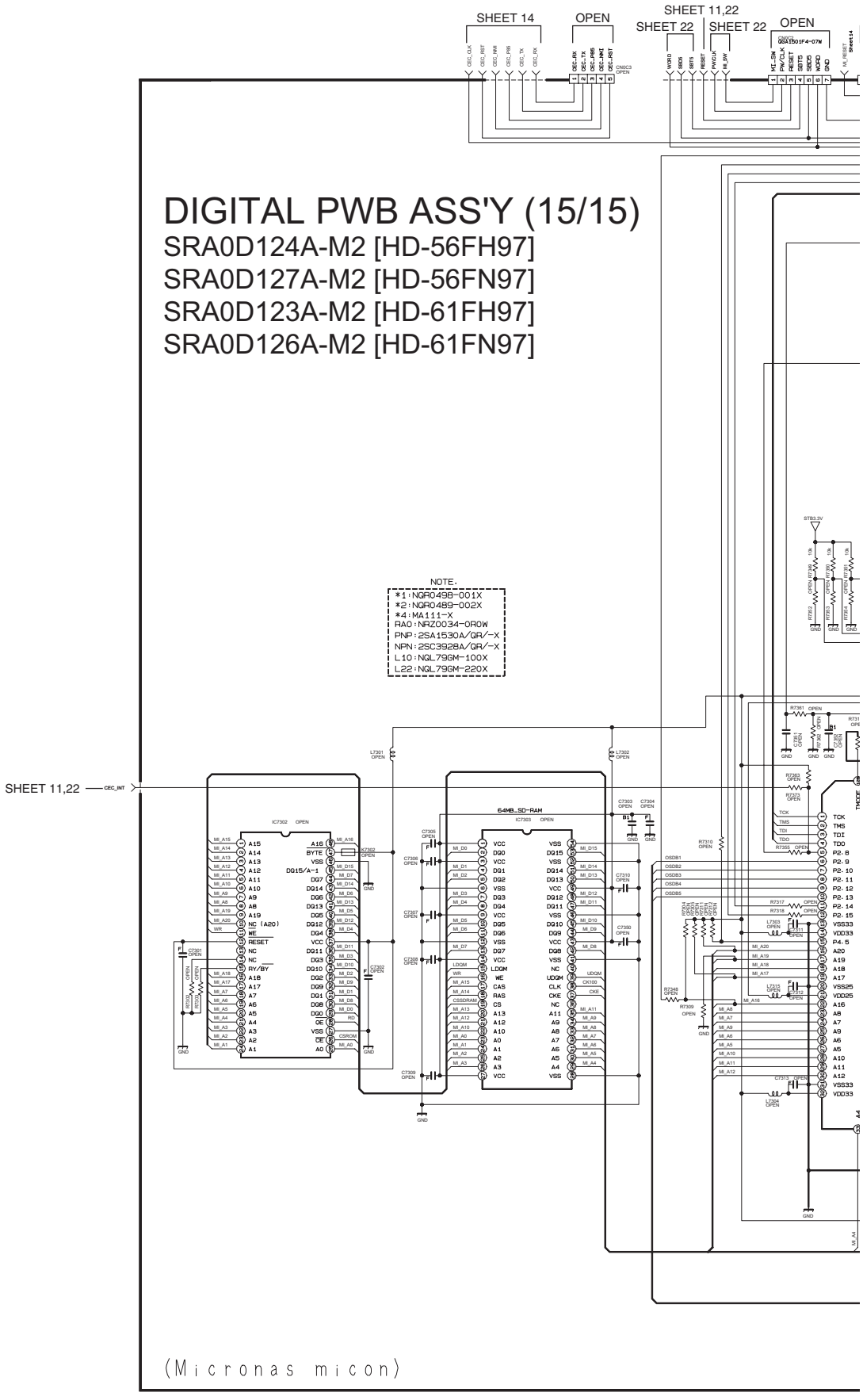
SHEET 14
OPEN
SHEET 11,22
SHEET 22
SHEET 22
OPEN
DIGITAL PWB ASS'Y (15/15)
SRA0D124A-M2 [HD-56FH97]
SRA0D127A-M2 [HD-56FN97]
SRA0D123A-M2 [HD-61FH97]
SRA0D126A-M2 [HD-61FN97]
NOTE:
*1:NQR0498-001X
*2:NQR0489-002X
*4:MA111-X
RA0:NRZ0034-0R0W
PNP:2SA1530A/QR/-X
NPN:2SC3928A/QR/-X
L10:NQL79GM-100X
L22:NQL79GM-220X
SHEET 11,22
CEC_INT
IC7302 OPEN
64MB_SD-RAM
IC7303 OPEN
(Micronas micon)

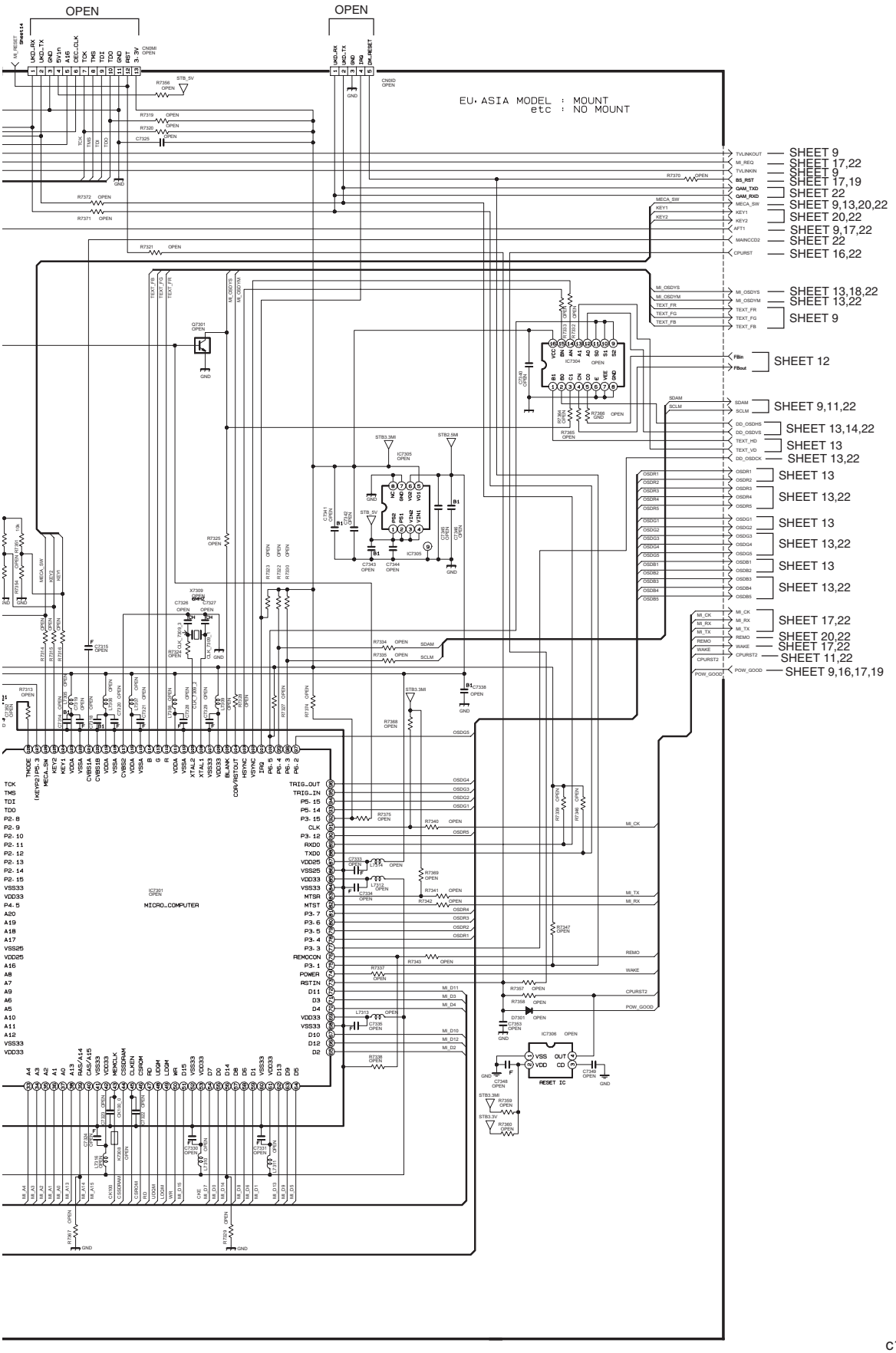

c10502001_0712_7/16_0.0

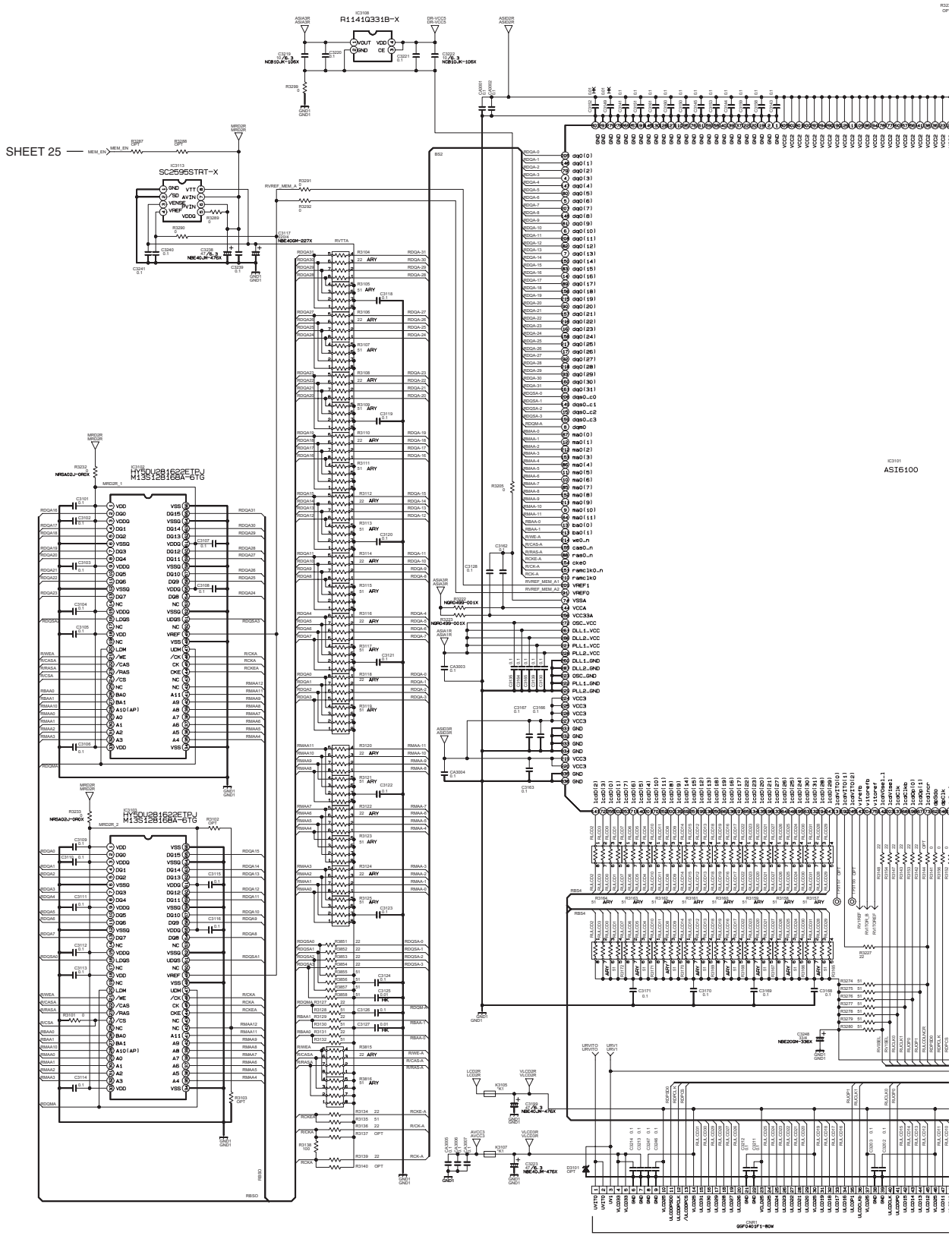
SHEET 25
R1141Q331B-X
SC2595STRT-X
HY5DU28162ETP-J
M13S128168A-6TG
AS16100
DRIVE PWB(2/9) CNG1 SHEE
DRIVE PWB(3/9) CNB1 SHEE

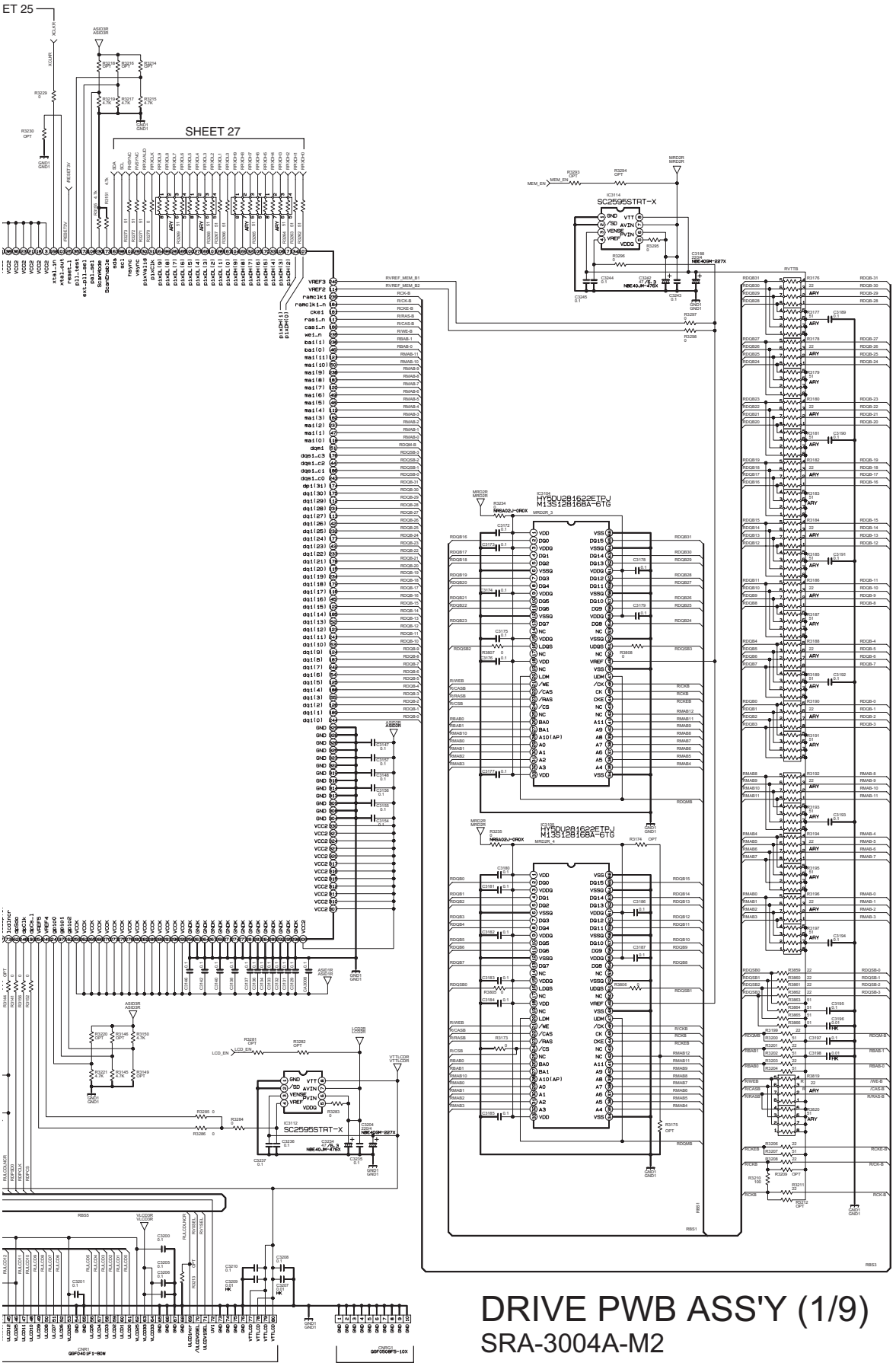

DRIVE PWB ASS'Y (1/9)

SRA-3004A-M2

c10488001_0712_1/9_0.0

DRIVE PWB CIRCUIT DIAGRAM (2/9) SHEET 25

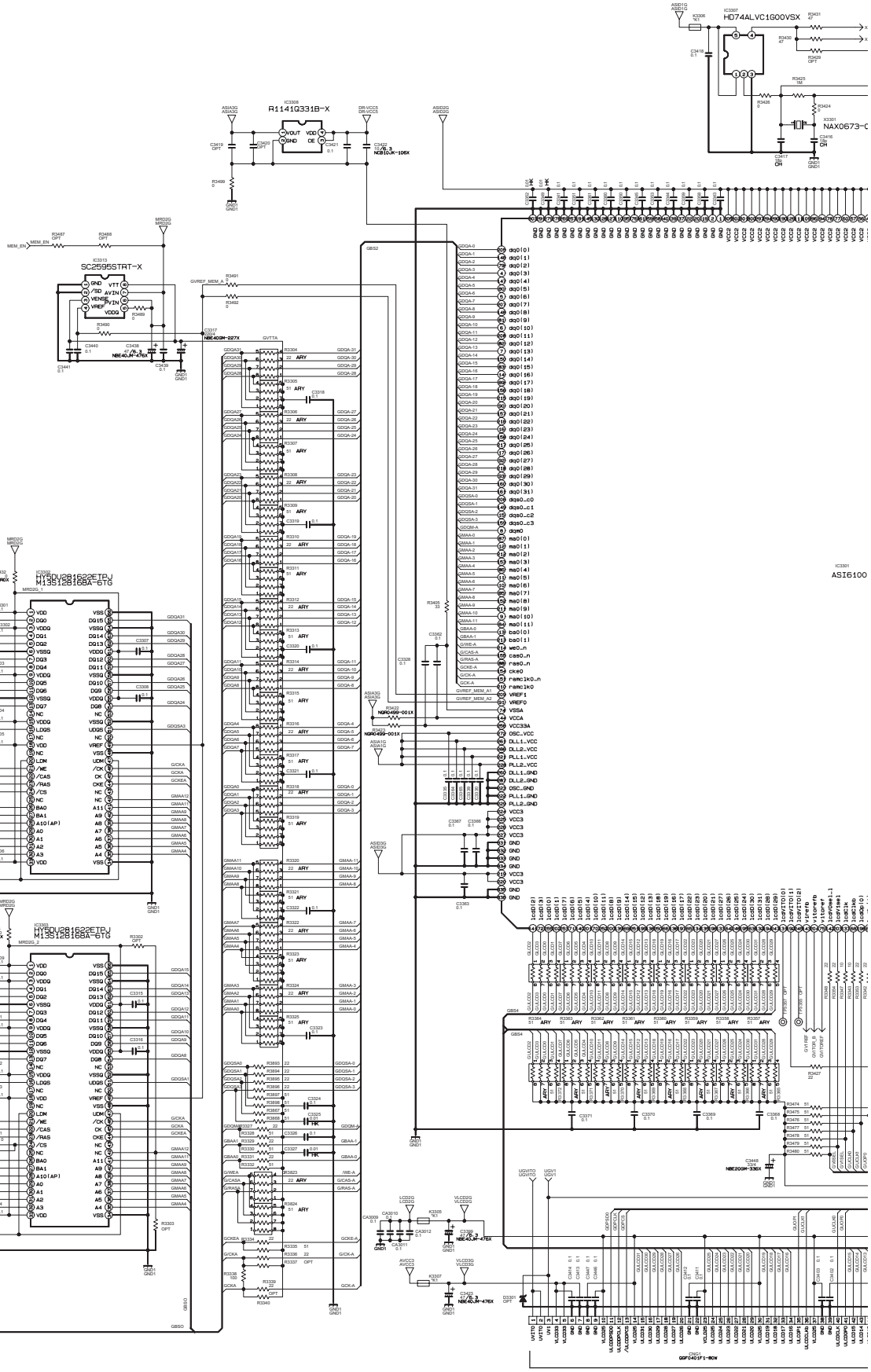

DRIVE PWB(1/9) CNR1 S
DRIVE PWB(3/9) CNB1 S

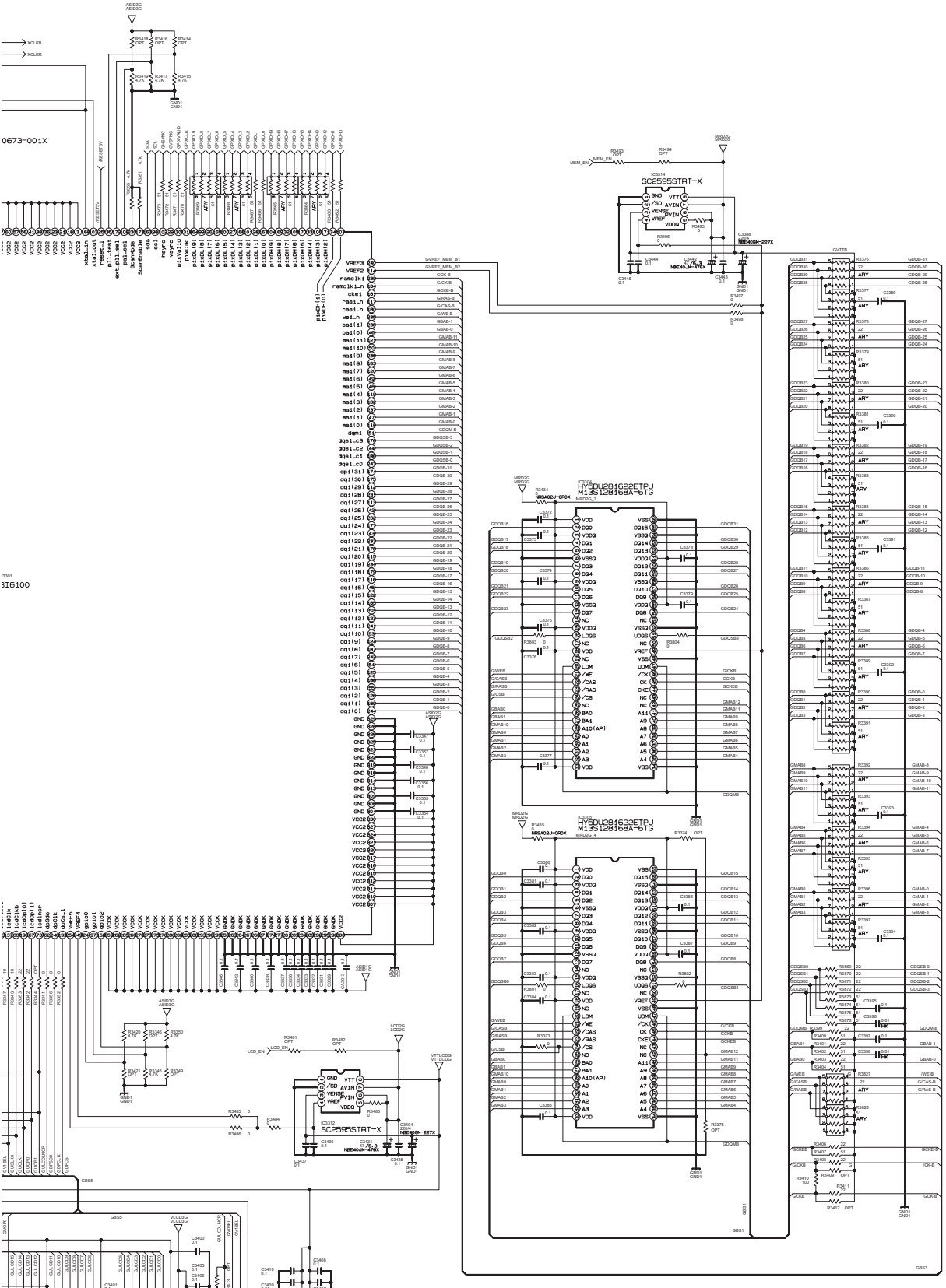

DRIVE PWB ASS'Y (2/9)

SRA-3004A-M2

NR1 SHEET 24
NB1 SHEET 26

DRIVE PWB(1/9) CNRG1 SHEET 24
DRIVE PWB(3/9) CNBG1 SHEET 26

c10488001_0712_2/9_0.0

SHI

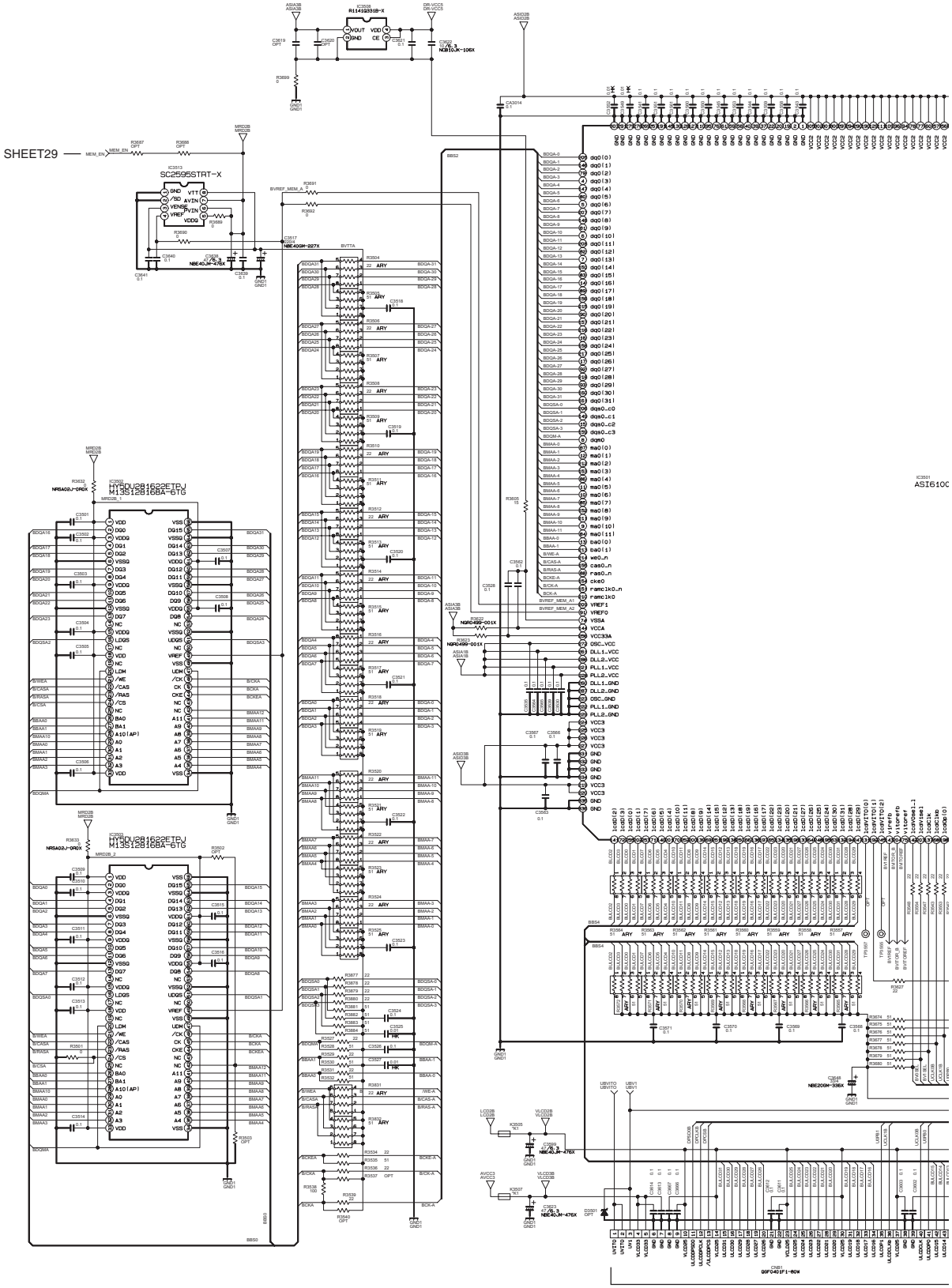
SHEET29
SC2595STRT-X
HY5DU281622ETPJ
M13S128168A-6TG
ASI610C
DRIVE PWB(1/9) CNR1
DRIVE PWB(2/9) CNG1

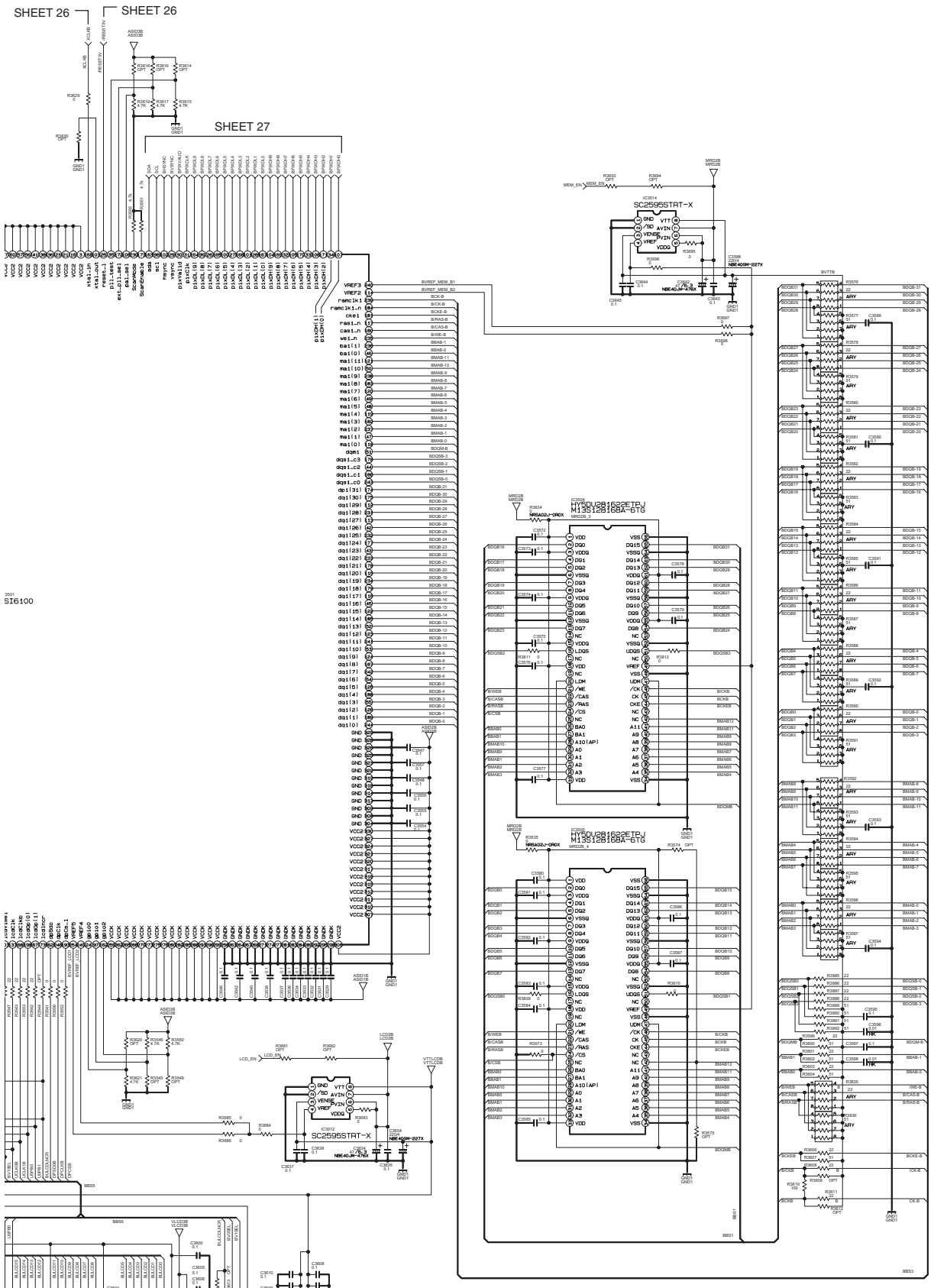

c10488001_0712_3/9_0.0

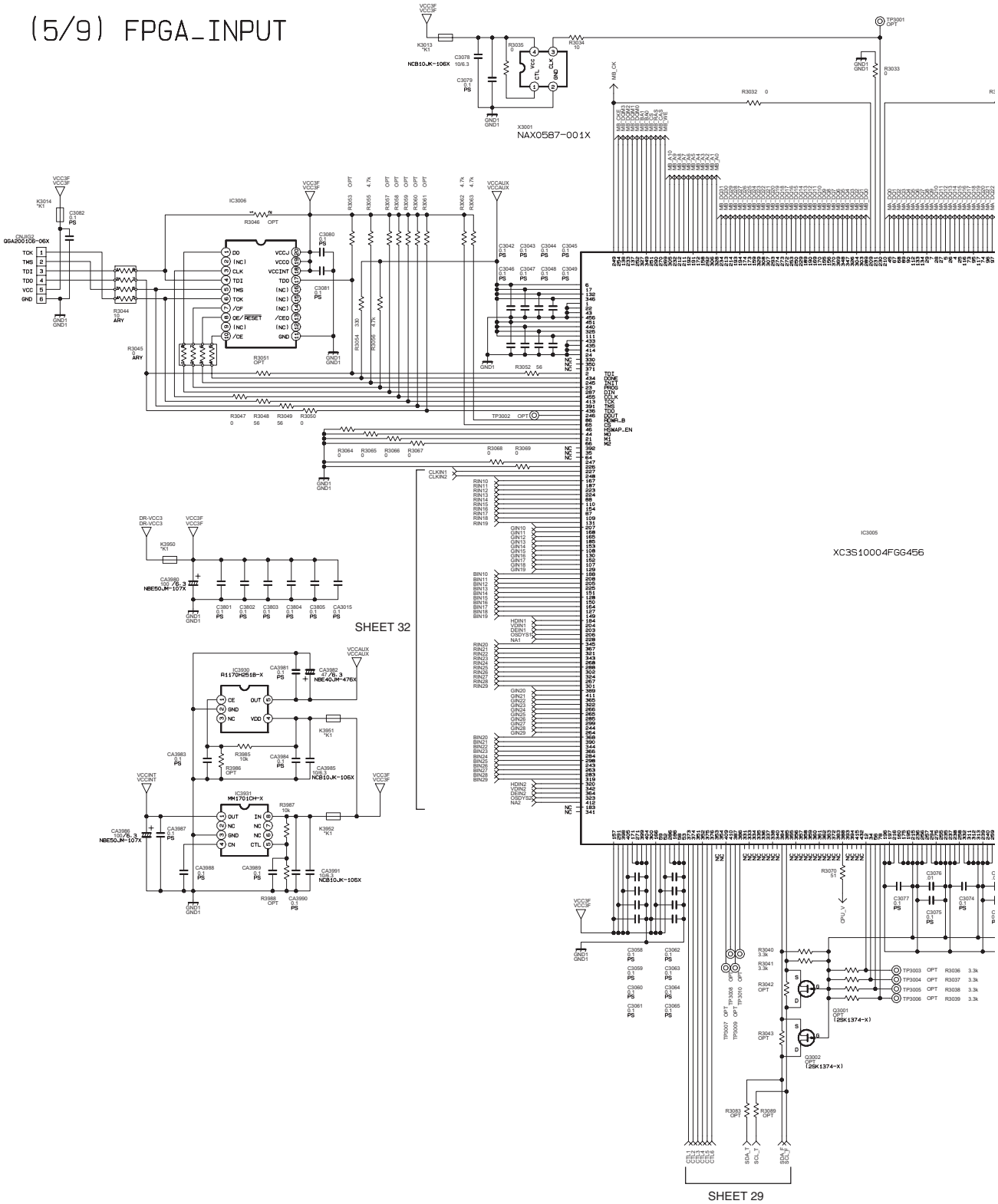
(5/9) FPGA_INPUT
NAX0587-001X
XC3S10004FGG456
SHEET 32
SHEET 29

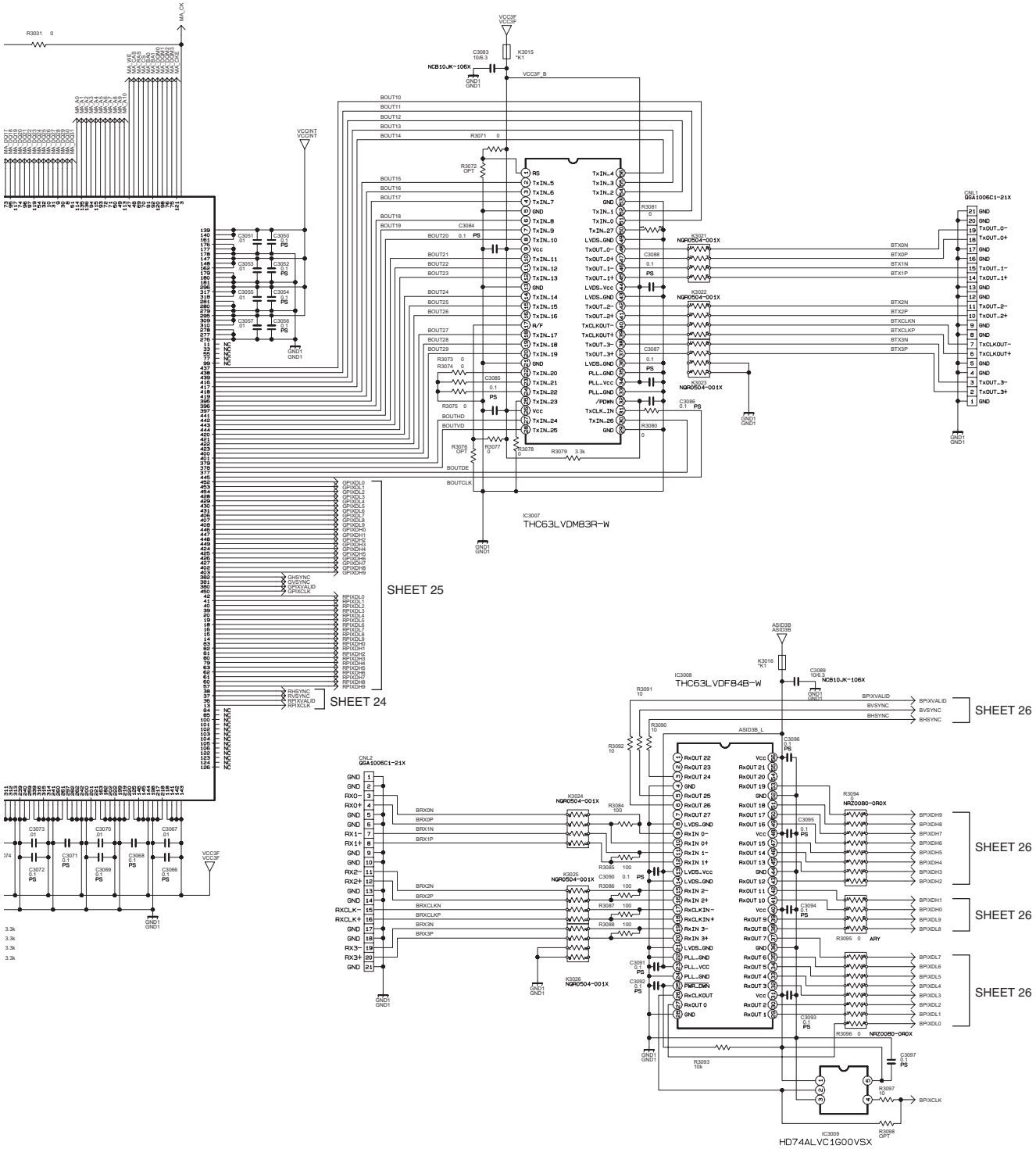

DRIVE PWB ASS'Y (4/9)

SRA-3004A-M2

c10488001_0712_5/9_0.0

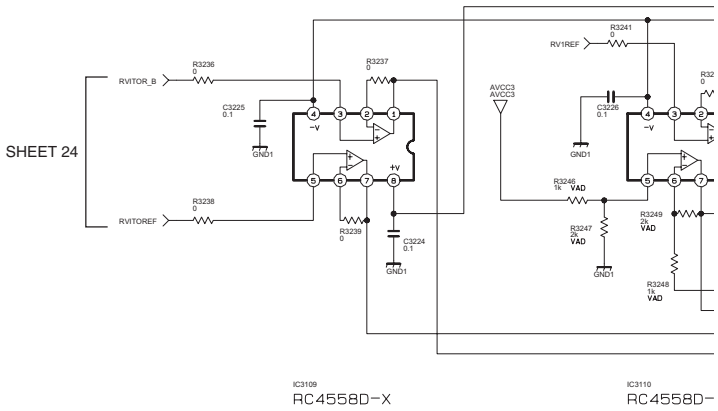

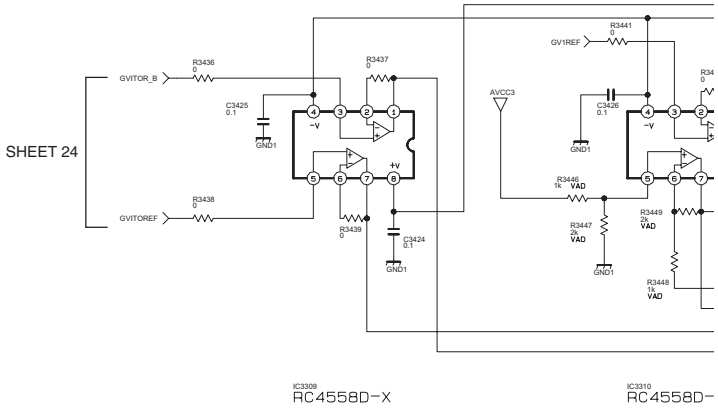

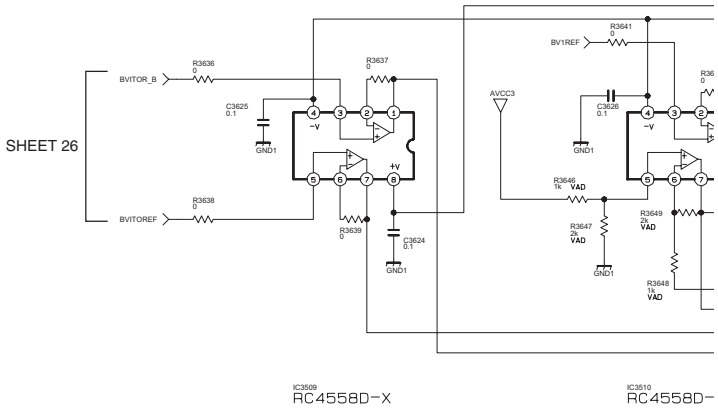

(7/9) ITO-V1_DRIVER

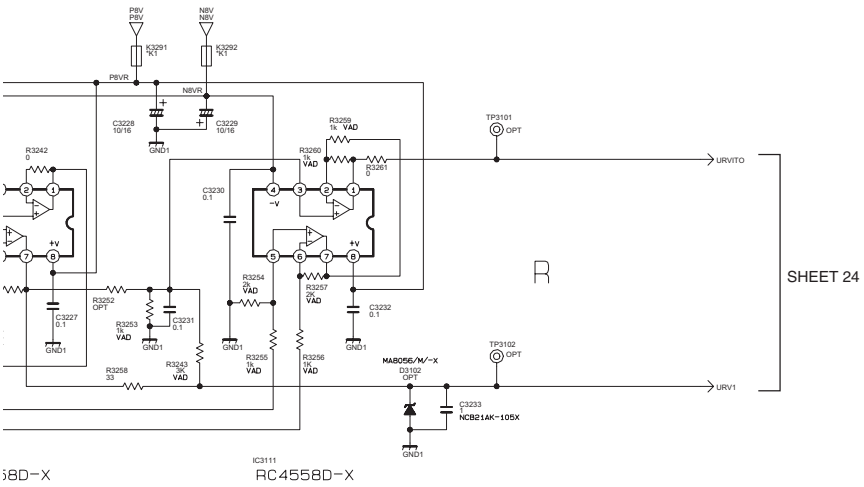

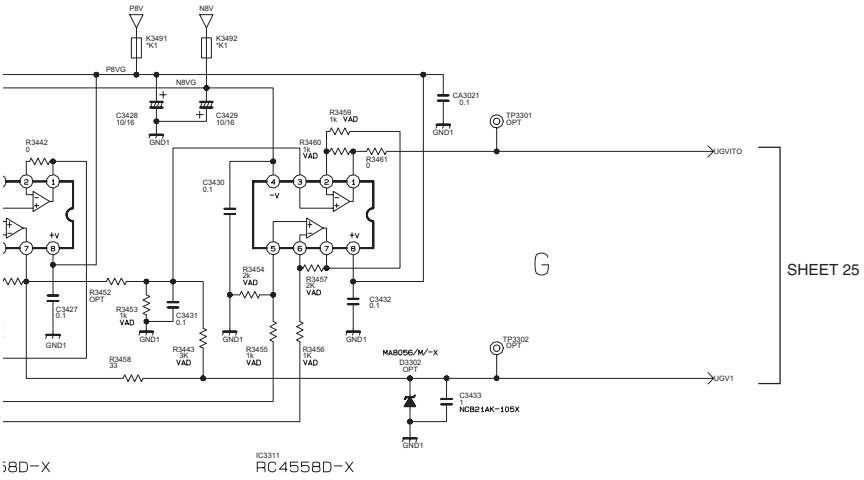

DRIVE PWB ASS'Y (5/9)

SRA-3004A-M2

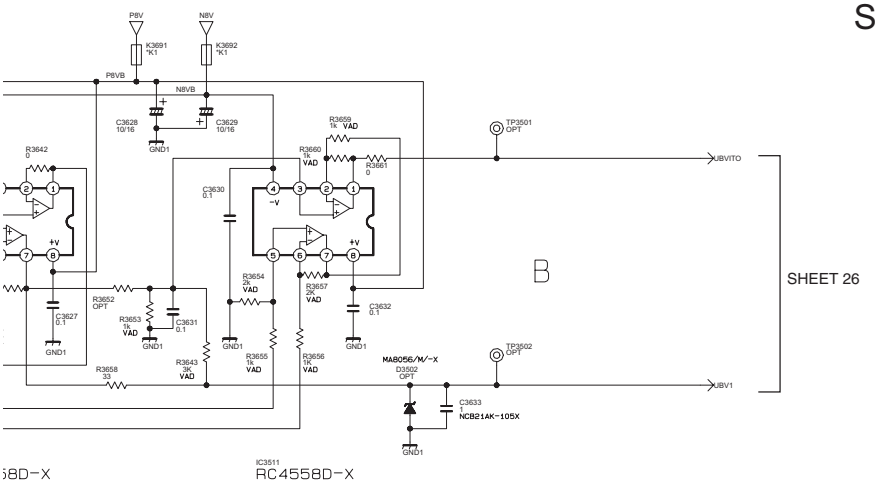

c10488001_0712_7/9_0.0

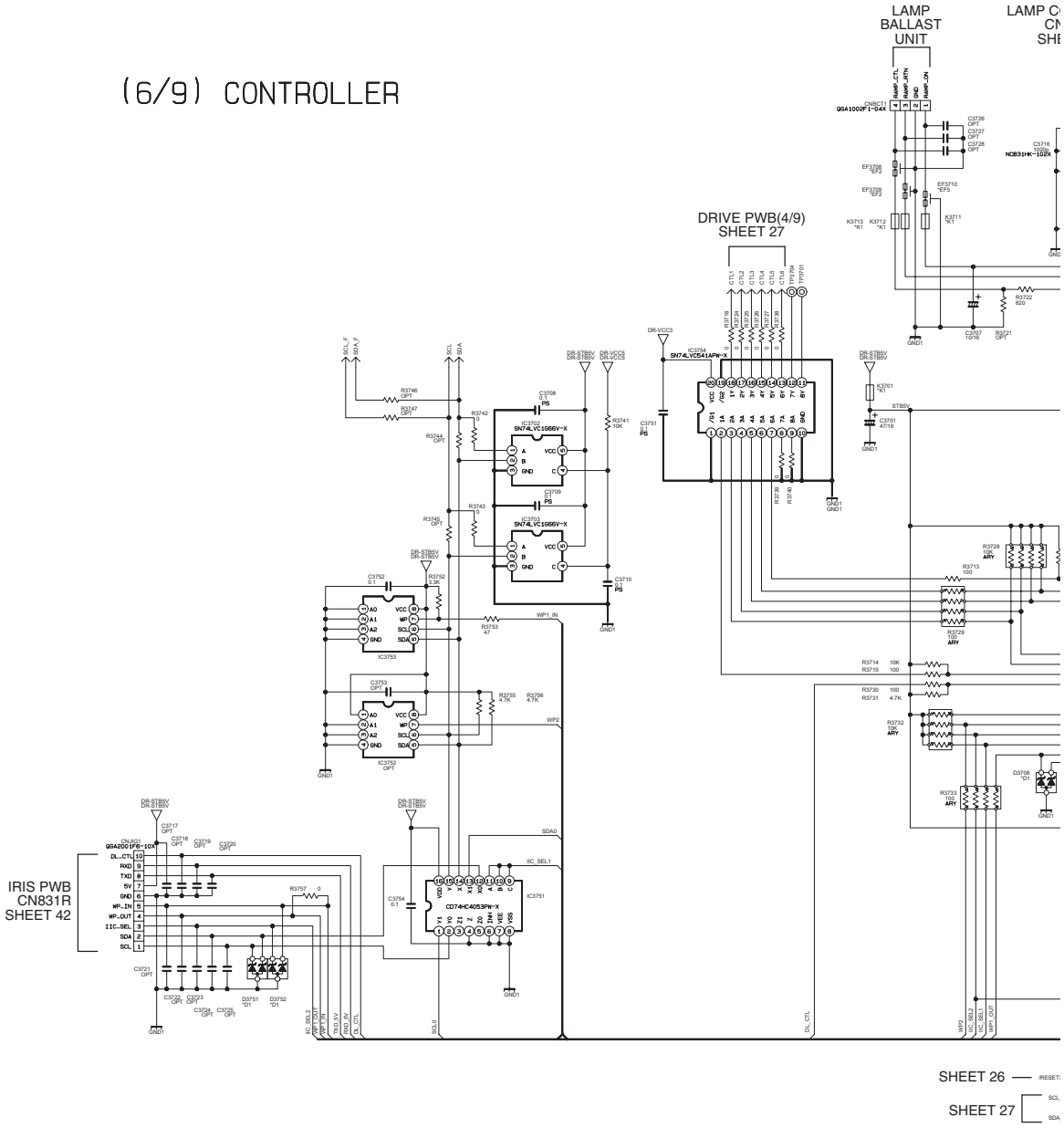

DRIVE PWB ASS'Y (6/9)

SRA-3004A-M2

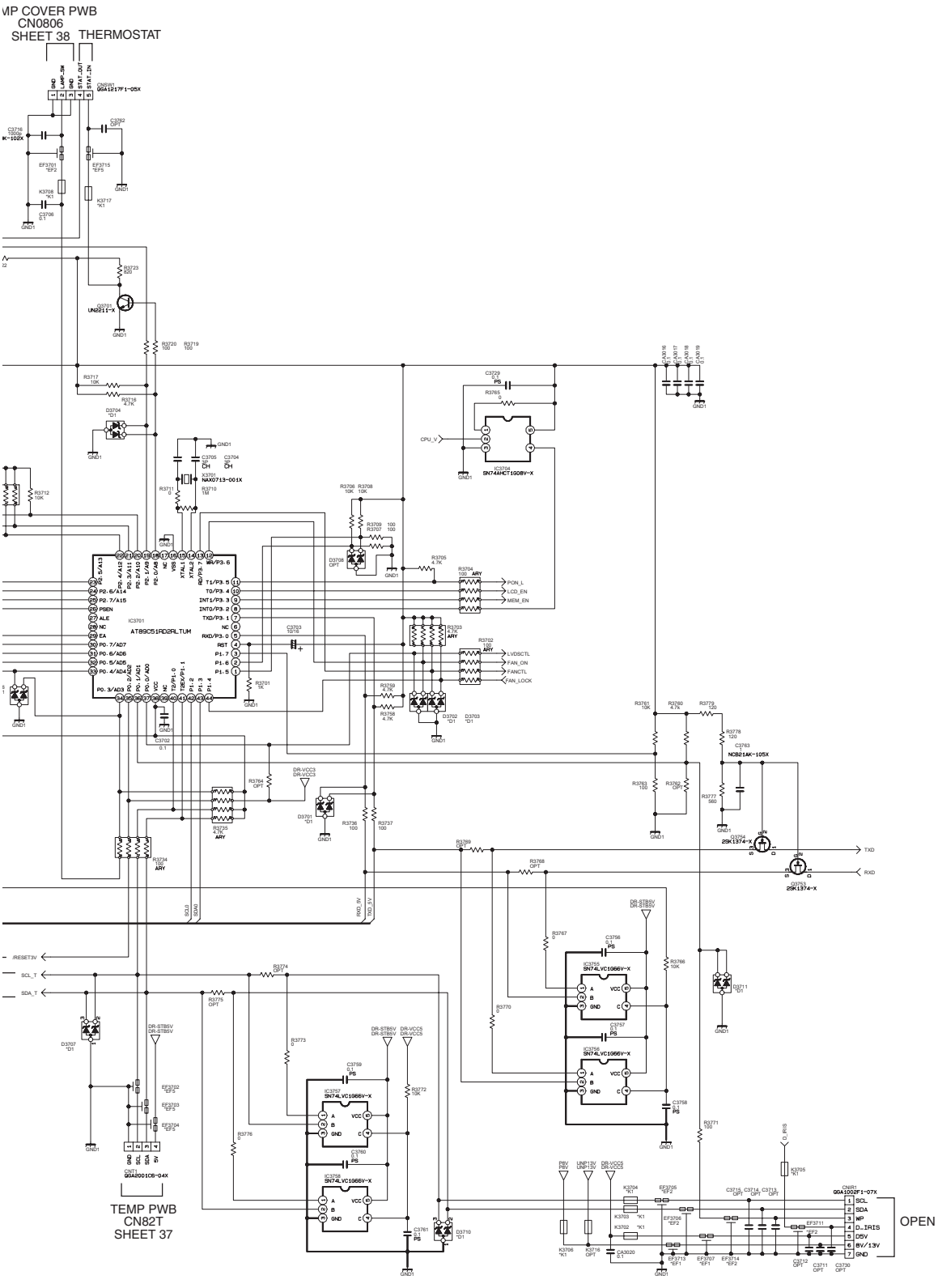

c10488001_0712_6/9_0.0

(8/9) POWER_REGULATER

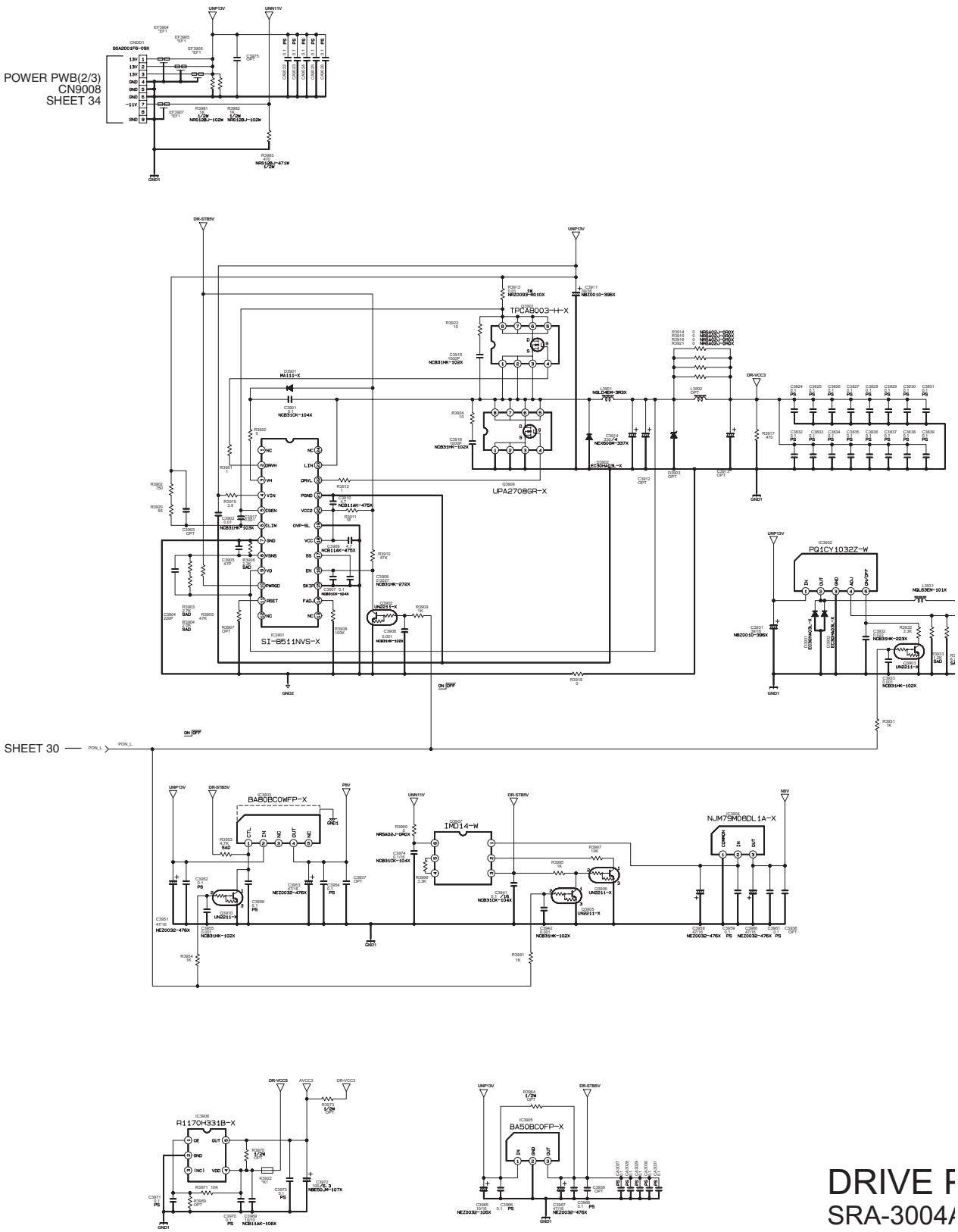

DRIVE F
SRA-3004/

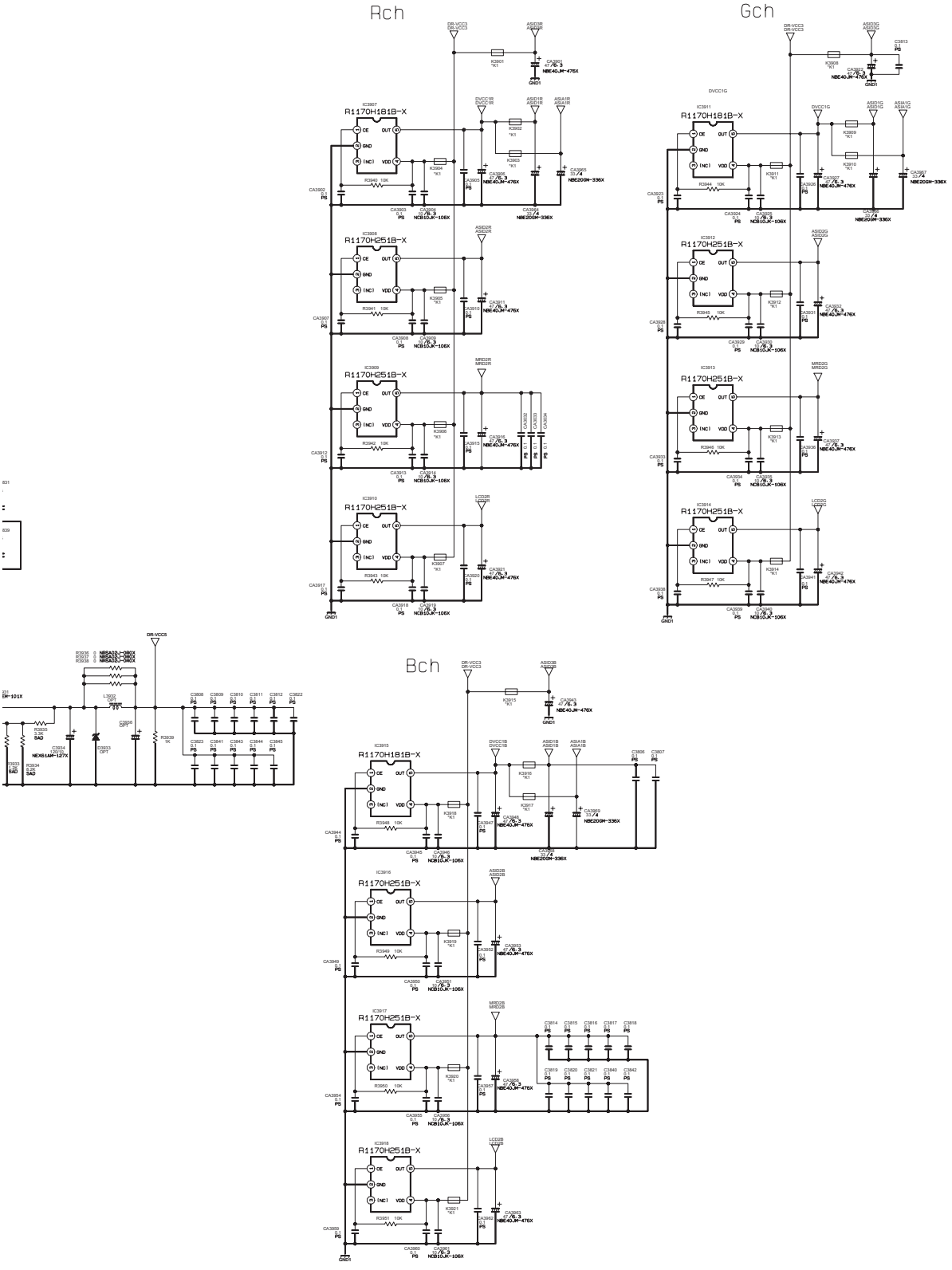

: PWB ASS'Y (7/9)

)4A-M2

c10488001_0712_8/9_0.0

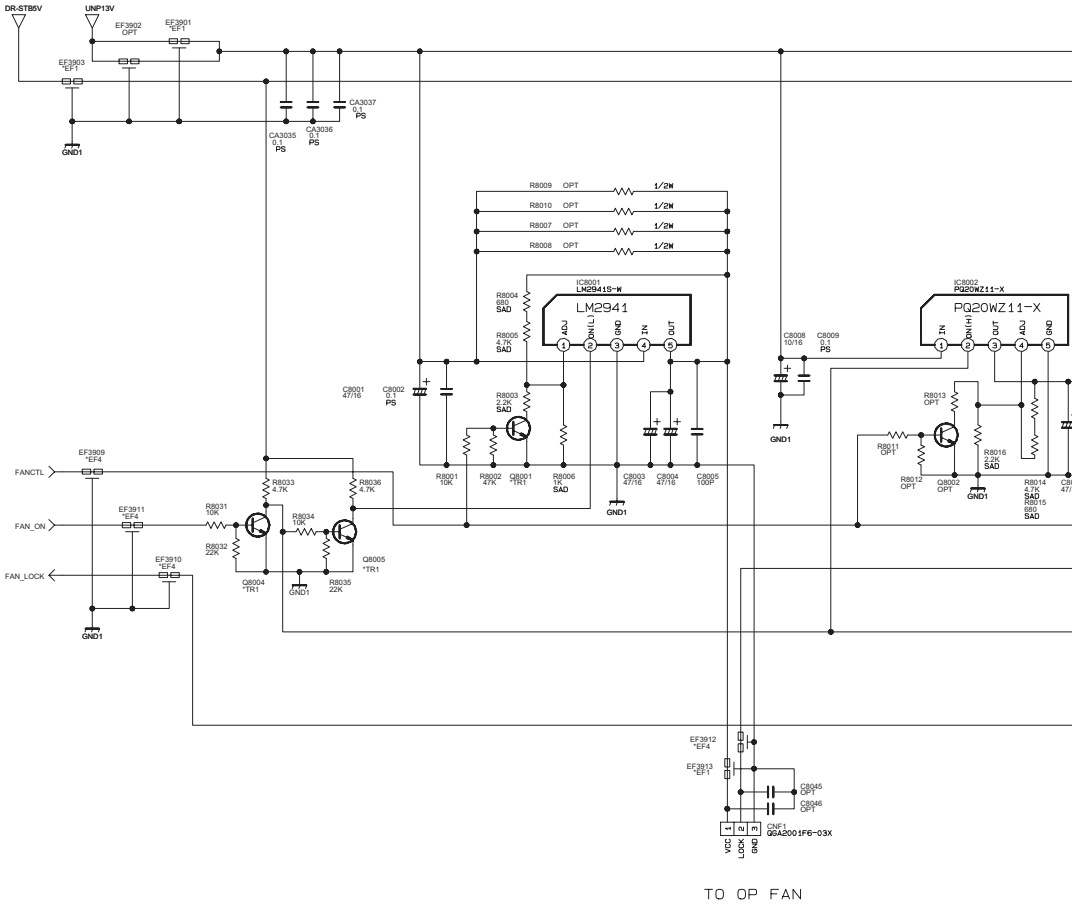

(9/9) FAN_CONTROL

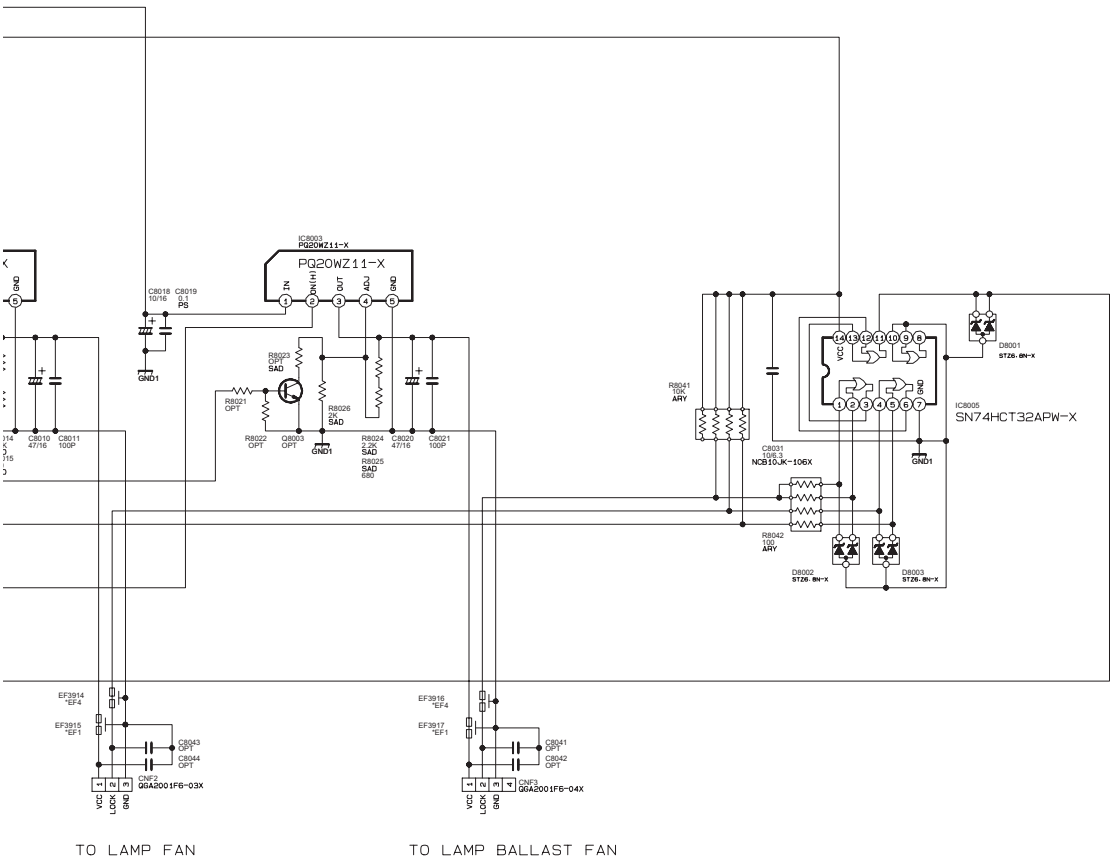

DRIVE PWB ASS'Y (8/9)

SRA-3004A-M2

c10488001_0712_9/9_0.0

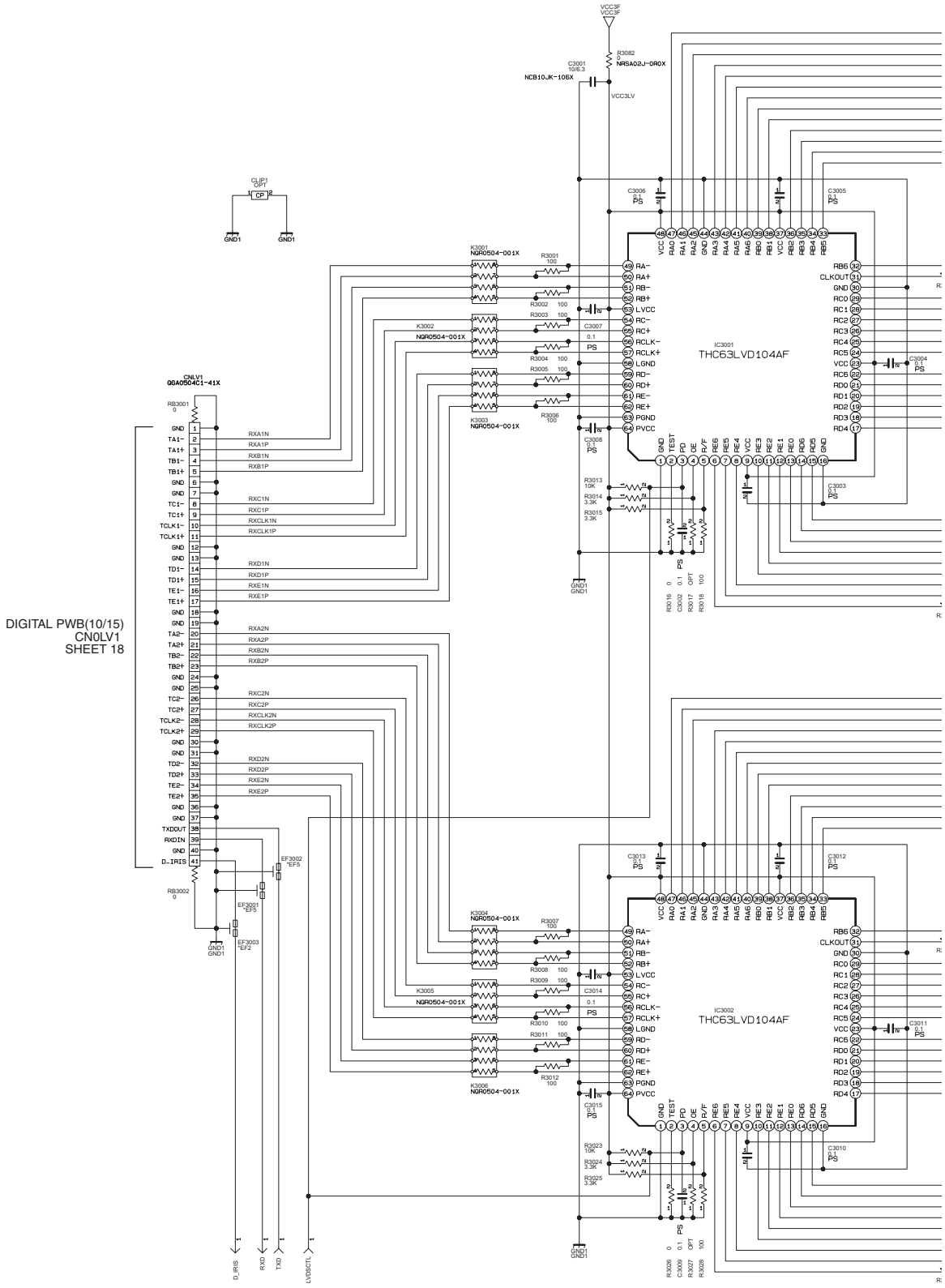

(4/9) LVDS_INPUT

DRIVE PWB ASS'Y (9/9)

SRA-3004A-M2

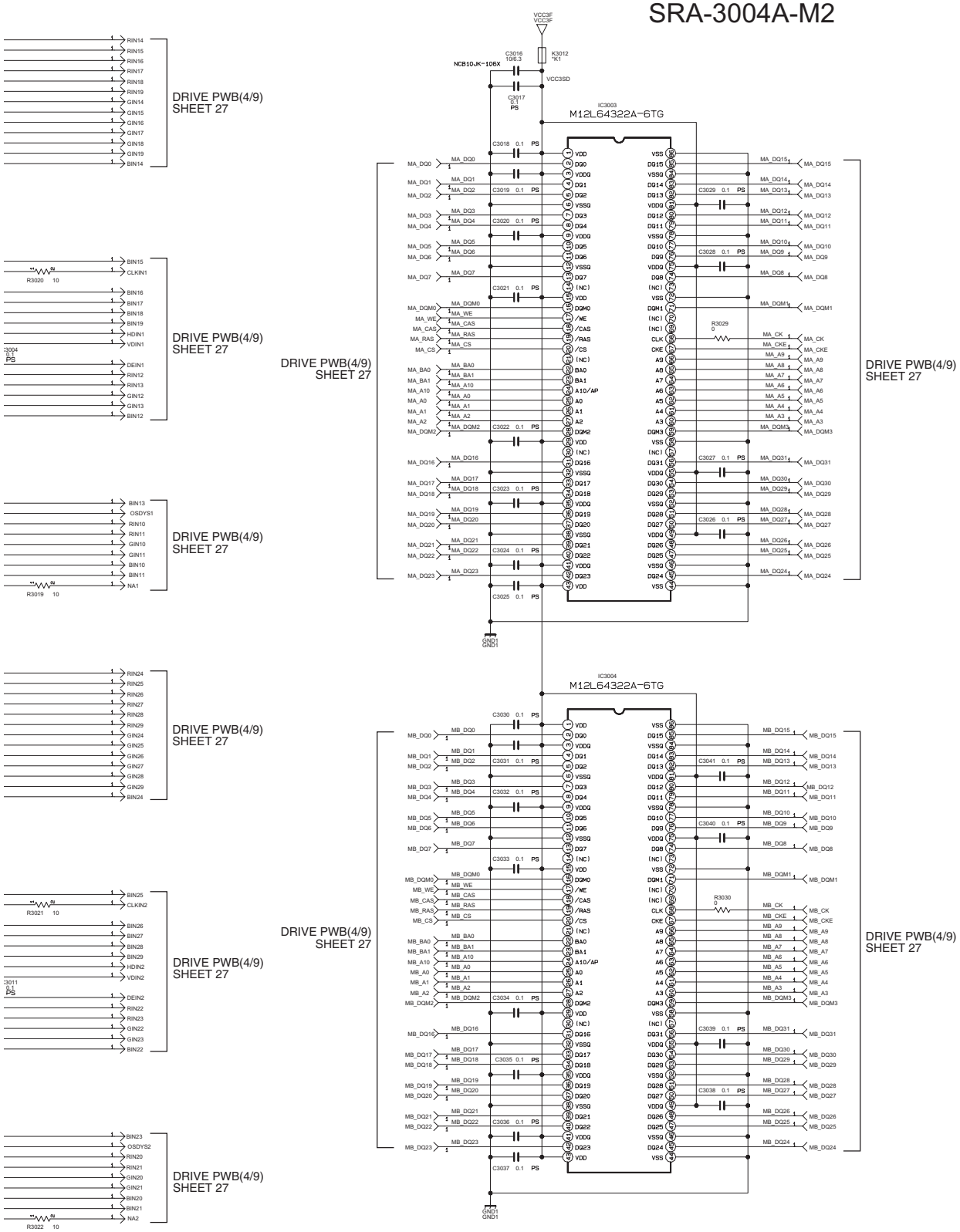

c10488001_0712_4/9_0.0

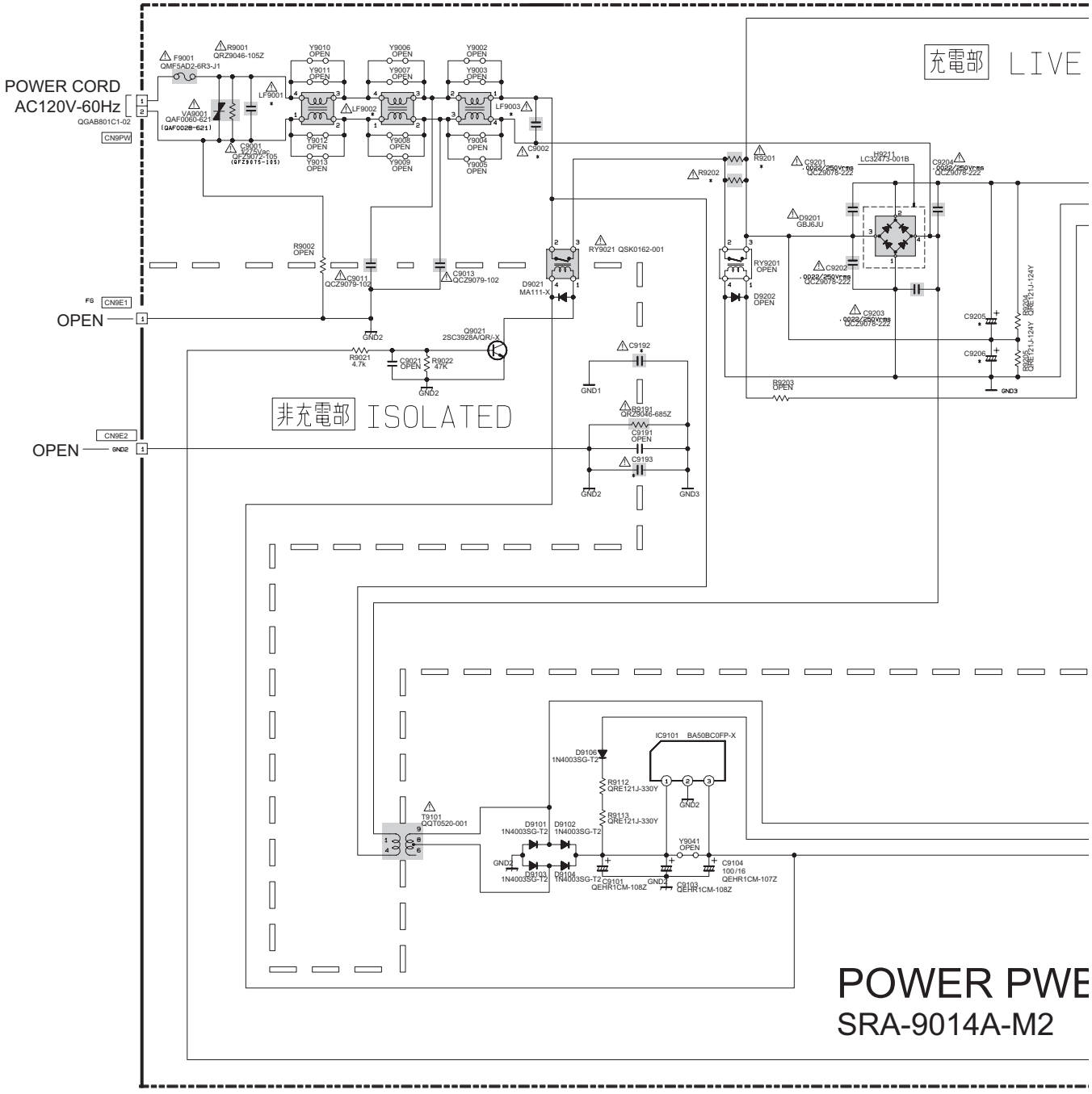
POWER CORD
AC120V-60Hz
QGAB801C1-02
CN9PW
充電部 LIVE
非充電部 ISOLATED
OPEN
CN9E1
OPEN
CN9E2
OPEN
F9001 QMF5AD2-6R3-J1
R9001 QRZ9046-105Z
VA9001 QAF0060-621
C9001 275VAC QFZ9075-105
LF9001
LF9002
LF9003
C9002
Y9010 OPEN
Y9011 OPEN
Y9012 OPEN
Y9013 OPEN
Y9006 OPEN
Y9007 OPEN
Y9008 OPEN
Y9009 OPEN
Y9002 OPEN
Y9003 OPEN
Y9004 OPEN
Y9005 OPEN
R9002 OPEN
C9011 QCZ9079-102
C9013 QCZ9079-102
RY9021 QSK0162-001
D9021 MA111-X
Q9021 2SC3928A/QR/X
R9021 4.7k
C9021 OPEN
R9022 47K
GND2
C9192
GND1
R9191 QRZ9046-685Z
C9191 OPEN
C9193
GND3
R9201
R9202
C9201 .0022/250V
QCZ9078-222
H9211 LC32473-001B
C9204 .0022/250V
QCZ9078-222
D9201 GBJ6JU
C9202 .0022/250V
QCZ9078-222
C9203 .0022/250V
QCZ9078-222
RY9201 OPEN
D9202 OPEN
C9205
C9206
R9203 OPEN
IC9101 BA50BC0FP-X
D9106 1N4003SG-T2
R9112 QRE121J-330Y
R9113 QRE121J-330Y
T9101 QQT0520-001
D9101 1N4003SG-T2
D9102 1N4003SG-T2
D9103 1N4003SG-T2
D9104 1N4003SG-T2
Y9041 OPEN
C9101 QERR1CM-106Z
C9103 QERR1CM-108Z
C9104 100/16 QERR1CM-107Z
POWER PWE
SRA-9014A-M2

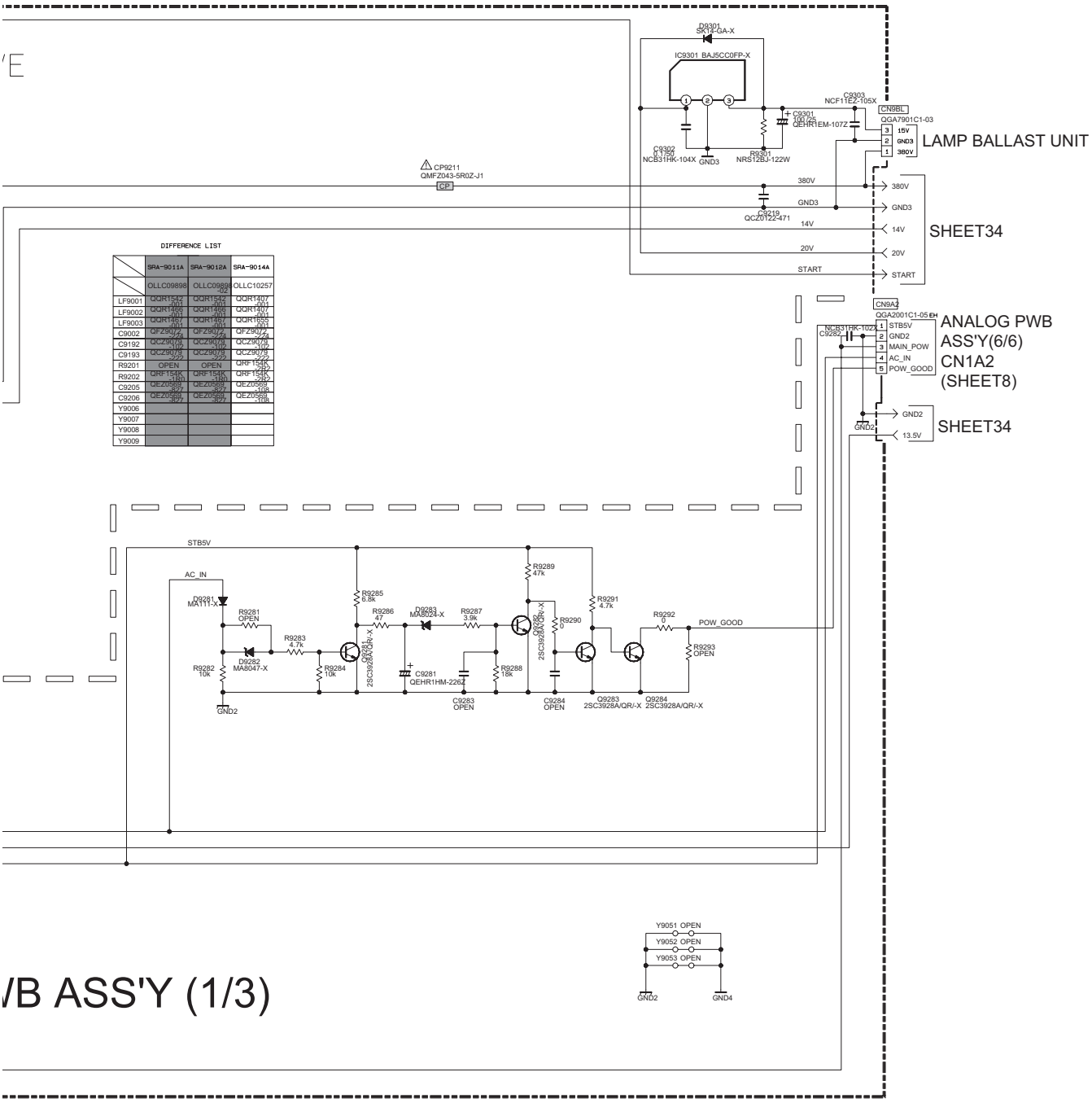

c20179001_0214_1/3_0.0

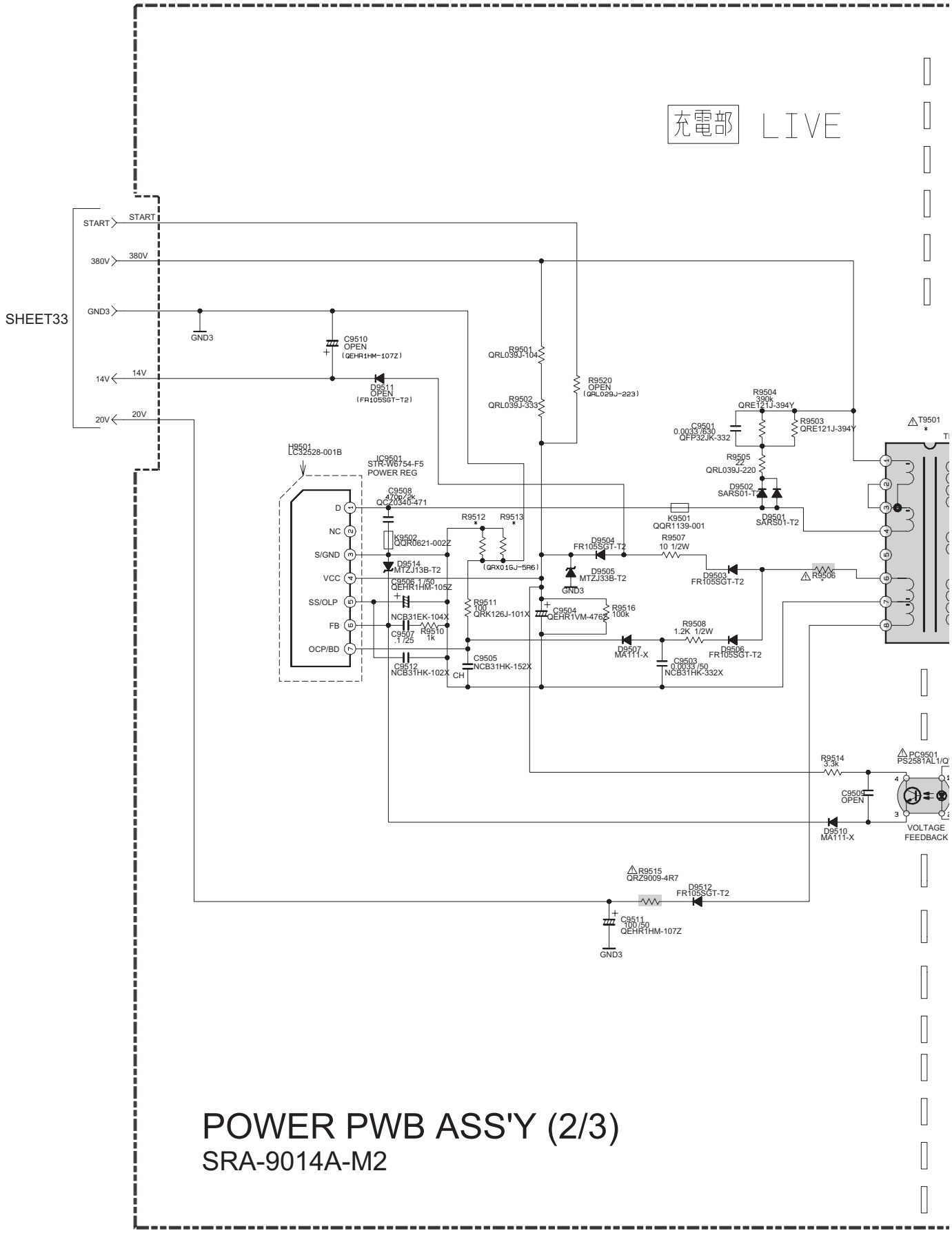

POWER PWB ASS'Y (2/3)

SRA-9014A-M2

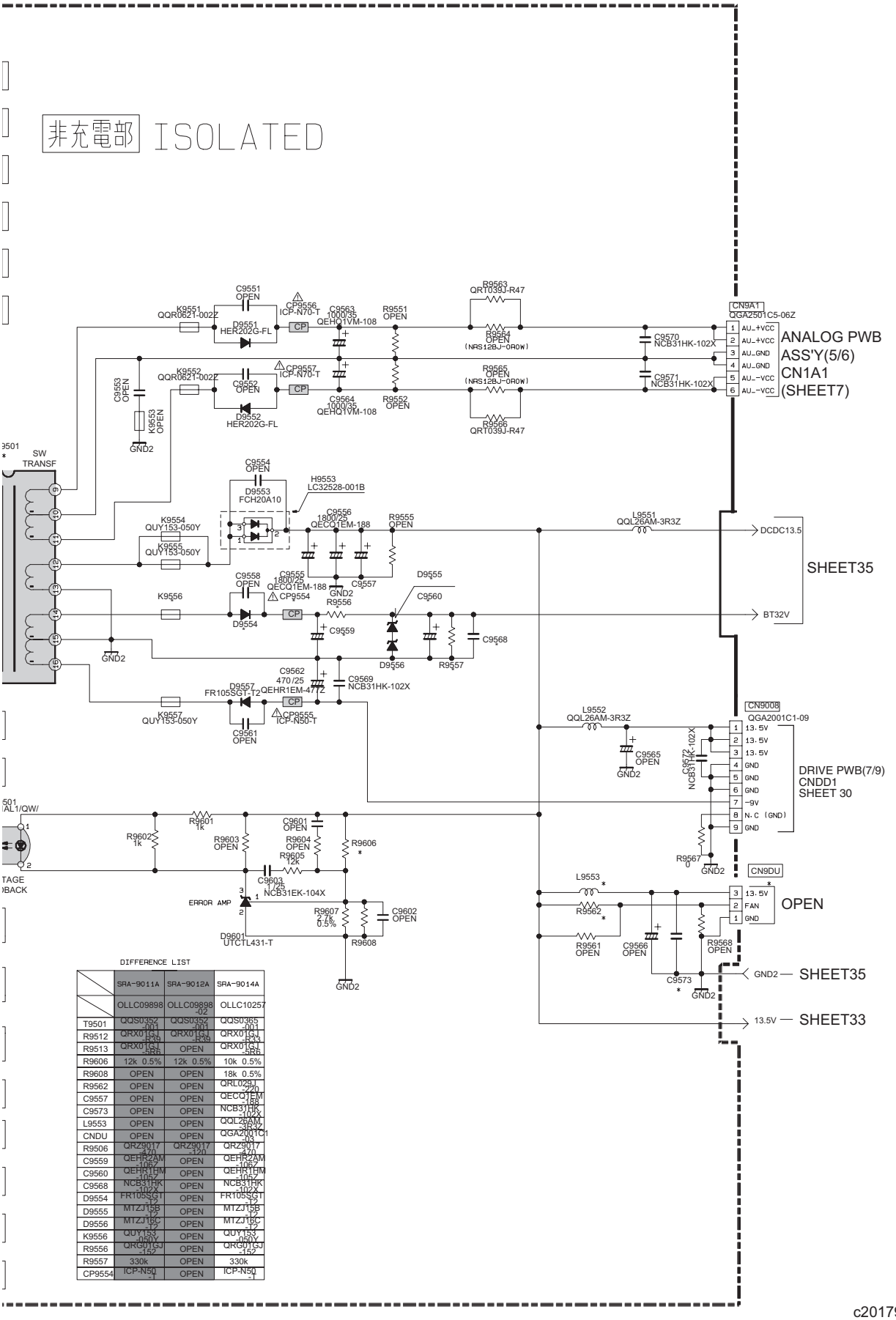

	SRA-9011A	SRA-9012A	SRA-9014A
	OLLC09898	OLLC09898-02	OLLC10257
T9501	QQS0352-001	QQS0352-001	QQS0365-001
R9512	QRX01GJ-R39	QRX01GJ-R39	QRX01GJ-R33
R9513	QRX01GJ-5R6	OPEN	QRX01GJ-5R6
R9606	12k 0.5%	12k 0.5%	10k 0.5%
R9608	OPEN	OPEN	18k 0.5%
R9562	OPEN	OPEN	QRL02J-220
C9557	OPEN	OPEN	QECQ1EM-188
C9573	OPEN	OPEN	NCB31HK-102X
L9553	OPEN	OPEN	QQL26AM-3R3Z
CNDU	OPEN	OPEN	QGA2001C1-03
R9506	QRZ9017-470	QRZ9017-120	QRZ9017-470
C9559	QEHR2AM-106Z	OPEN	QEHR2AM-106Z
C9560	QEHR1HM-106Z	OPEN	QEHR1HM-106Z
C9568	NCB31HK-102X	OPEN	NCB31HK-102X
D9554	FR105SGT-T2	OPEN	FR105SGT-T2
D9555	MTZJ15B-T2	OPEN	MTZJ15B-T2
D9556	MTZJ18C-T2	OPEN	MTZJ18C-T2
K9556	QUY153-050Y	OPEN	QUY153-050Y
R9556	QRG01GJ-152	OPEN	QRG01GJ-152
R9557	330k	OPEN	330k
CP9554	ICP-N50-T	OPEN	ICP-N50-T

c20179001_0214_2/3_0.0

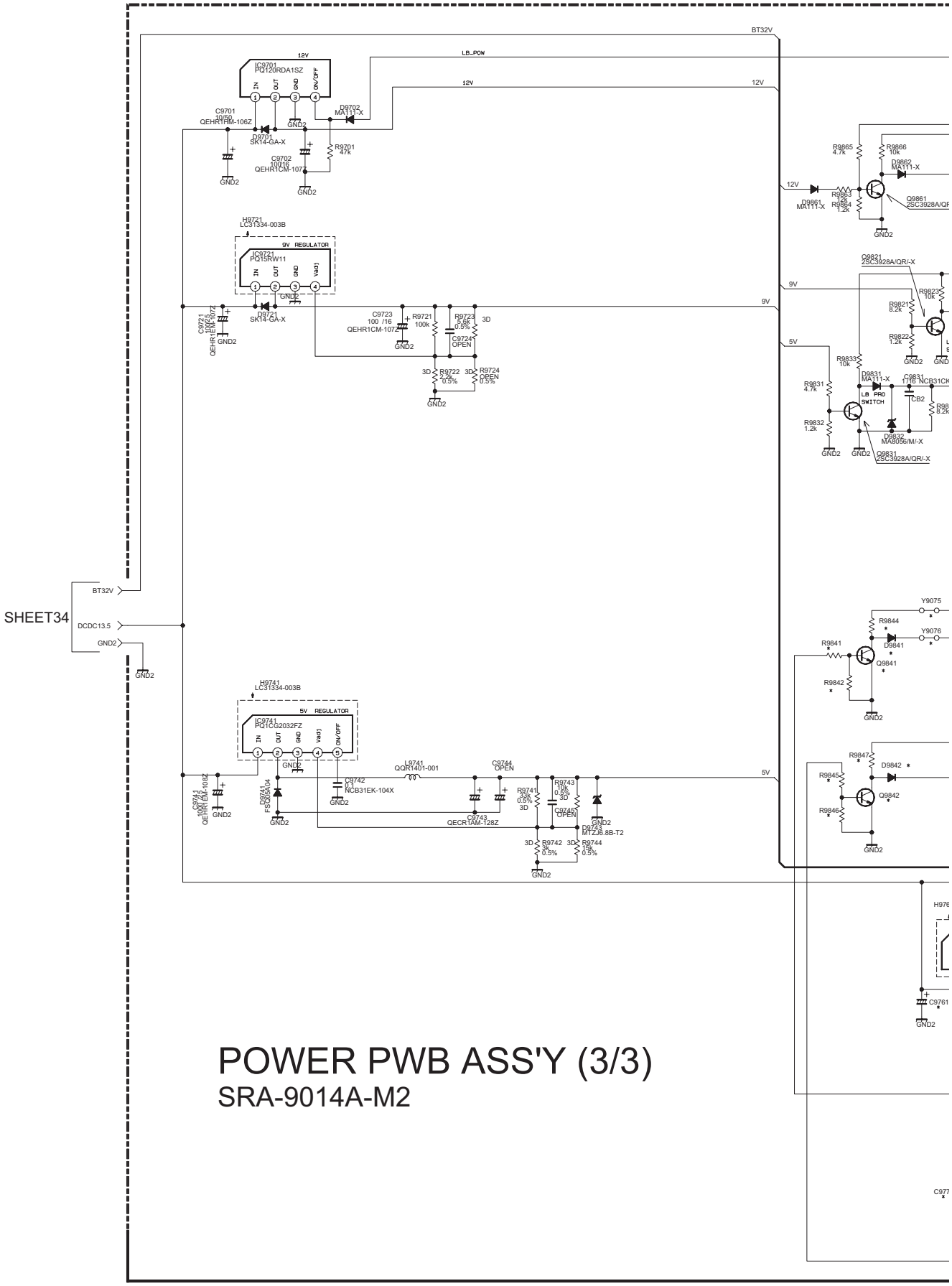

POWER PWB ASS'Y (3/3)
SRA-9014A-M2

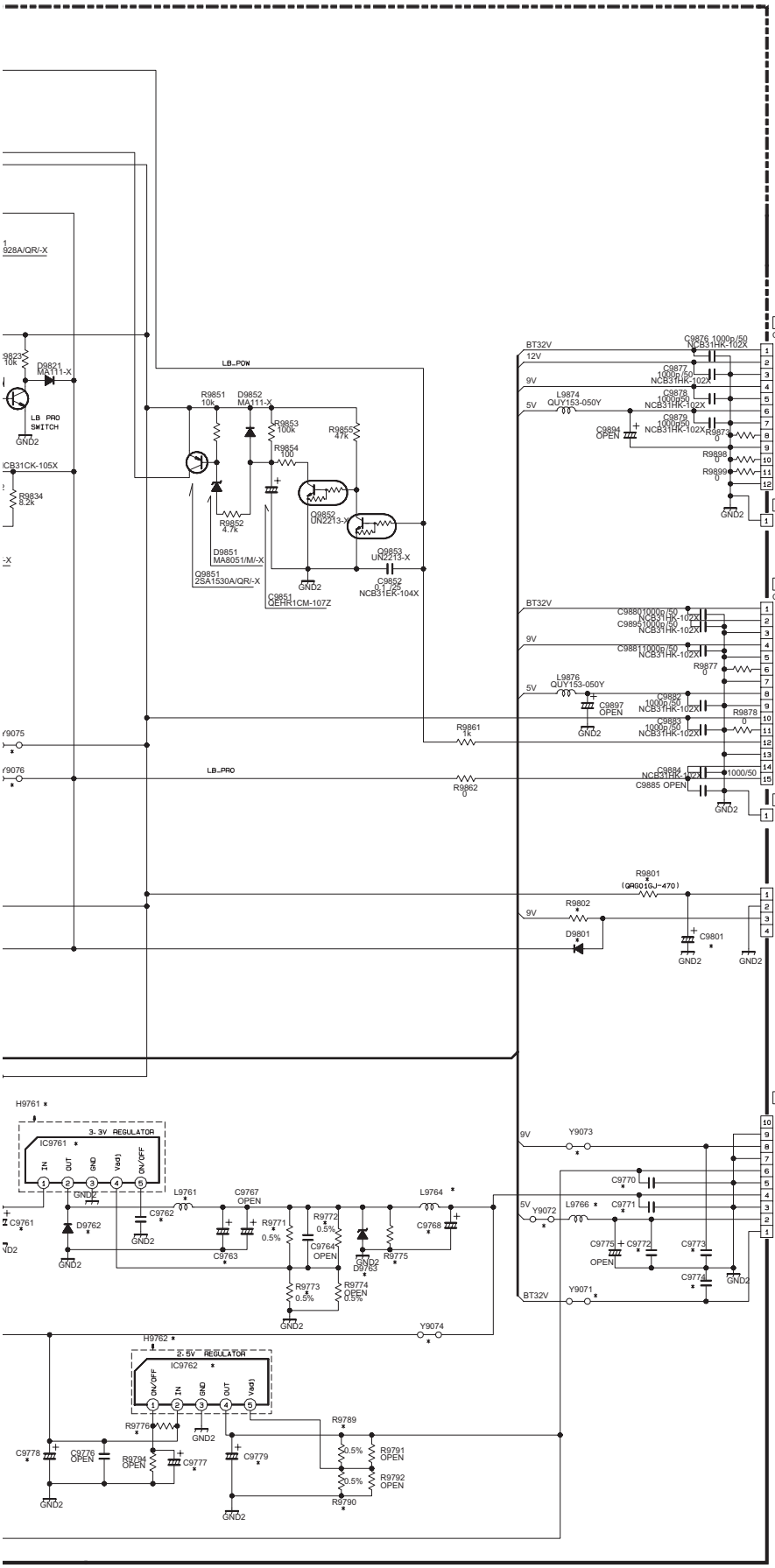

DIFFERENCE LIST

	SRA-9011A	SRA-9012A	SRA-9014A
	OLLC09898	ollc09898-02	OLLC10257
CNFAN	QGA2001C1	OPEN	OPEN
CN2UP	QGA2001C1	OPEN	OPEN
IC9761	PQTCG2[illegible]	OPEN	OPEN
IC9762	SI-3011[illegible]	OPEN	OPEN
H9761	LC31334-003B	OPEN	OPEN
H9762	LC31334-003B	OPEN	OPEN
C9761	QEHR1EM-[illegible]	OPEN	OPEN
C9762	NCB31ER-[illegible]	OPEN	OPEN
C9763	QECR1AM-[illegible]	OPEN	OPEN
C9768	QEHR1CM-[illegible]	OPEN	OPEN
C9770	NCB31HK-[illegible]	OPEN	OPEN
C9771	NCB31HK-[illegible]	OPEN	OPEN
C9772	NCB31HK-[illegible]	OPEN	OPEN
C9773	NCB31HK-[illegible]	OPEN	OPEN
C9774	NCB31HK-[illegible]	OPEN	OPEN
C9777	QEHR1HM-[illegible]	OPEN	OPEN
C9778	QEHR1CM-[illegible]	OPEN	OPEN
C9779	QEHR1CM-[illegible]	OPEN	OPEN
C9801	QEHR1HM-[illegible]	OPEN	OPEN
D9762	FSQ05A04	OPEN	OPEN
D9763	MTZJ33B-[illegible]	OPEN	OPEN
D9801	MA111-X	OPEN	OPEN
D9841	MA111-X	OPEN	OPEN
D9842	MA111-X	OPEN	OPEN
L9761	QQR1[illegible]	OPEN	OPEN
L9764	QUY153-[illegible]	OPEN	OPEN
L9766	QUY153-[illegible]	OPEN	OPEN
Q9841	2SC3928A-[illegible]	OPEN	OPEN
Q9842	2SC3928A-[illegible]	OPEN	OPEN
R9771	5.6k	OPEN	OPEN
R9772	6.8k	OPEN	OPEN
R9773	1.8k	OPEN	OPEN
R9775	NRS12[illegible]-331M	OPEN	OPEN
R9776	4.7k	OPEN	OPEN
R9789	15k	OPEN	OPEN
R9790	11k	OPEN	OPEN
R9801	QRG01GJ-[illegible]-471	OPEN	OPEN
R9802	4.7k	OPEN	OPEN
R9841	2.7k	OPEN	OPEN
R9842	1.2k	OPEN	OPEN
R9844	10k	OPEN	OPEN
R9845	1.8k	OPEN	OPEN
R9846	1.2k	OPEN	OPEN
R9847	10k	OPEN	OPEN
Y9071	QUY16V-[illegible]	OPEN	OPEN
Y9072	QUY16V-[illegible]	OPEN	OPEN
Y9073	QUY16V-[illegible]	OPEN	OPEN
Y9074	QUY16V-[illegible]	OPEN	OPEN
Y9075	QUY16V-[illegible]	OPEN	OPEN
Y9076	QUY16V-[illegible]	OPEN	OPEN

c20179001_0214_3/3_0.0

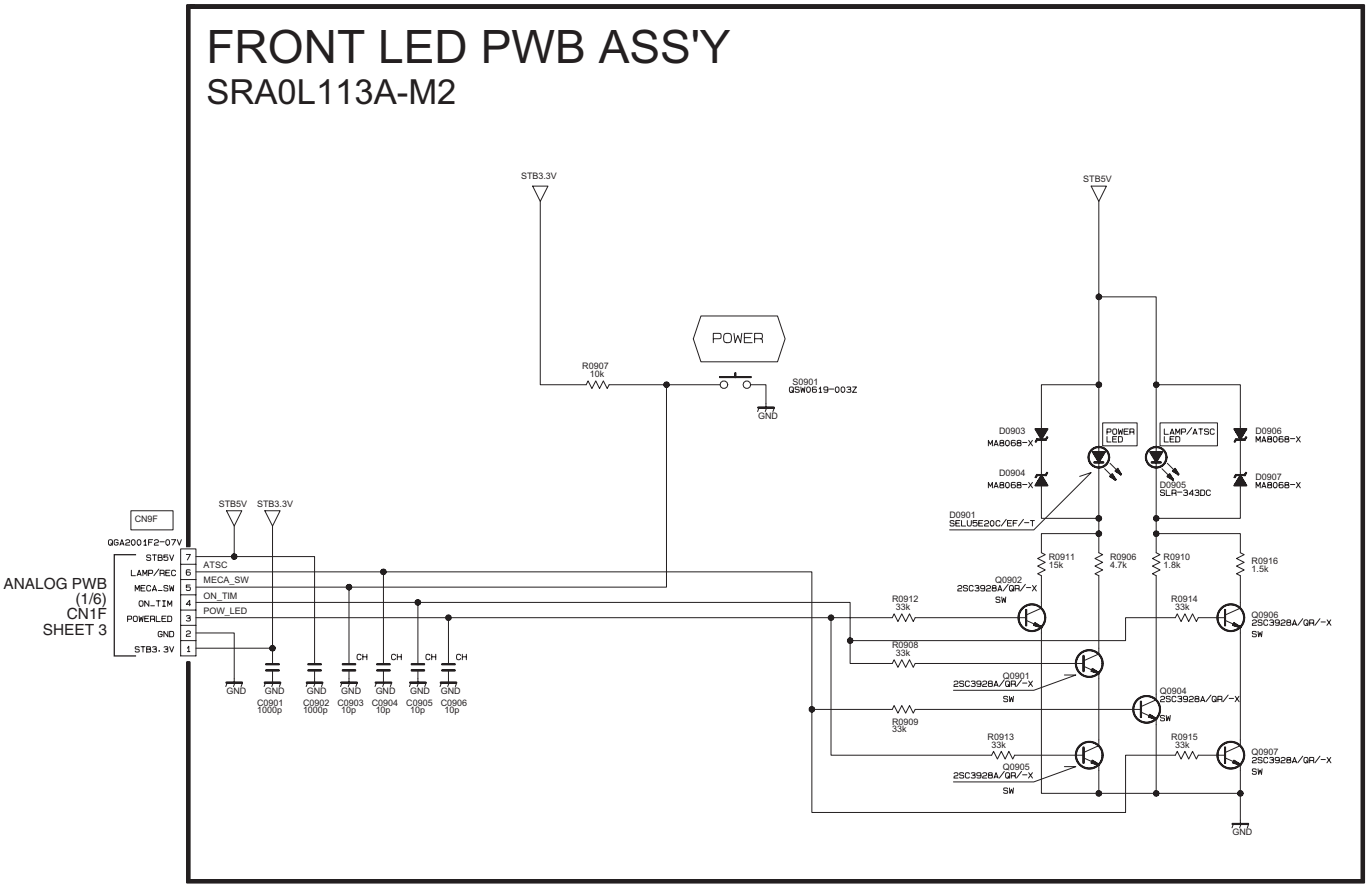

c30217001_0712_1/1_0.0

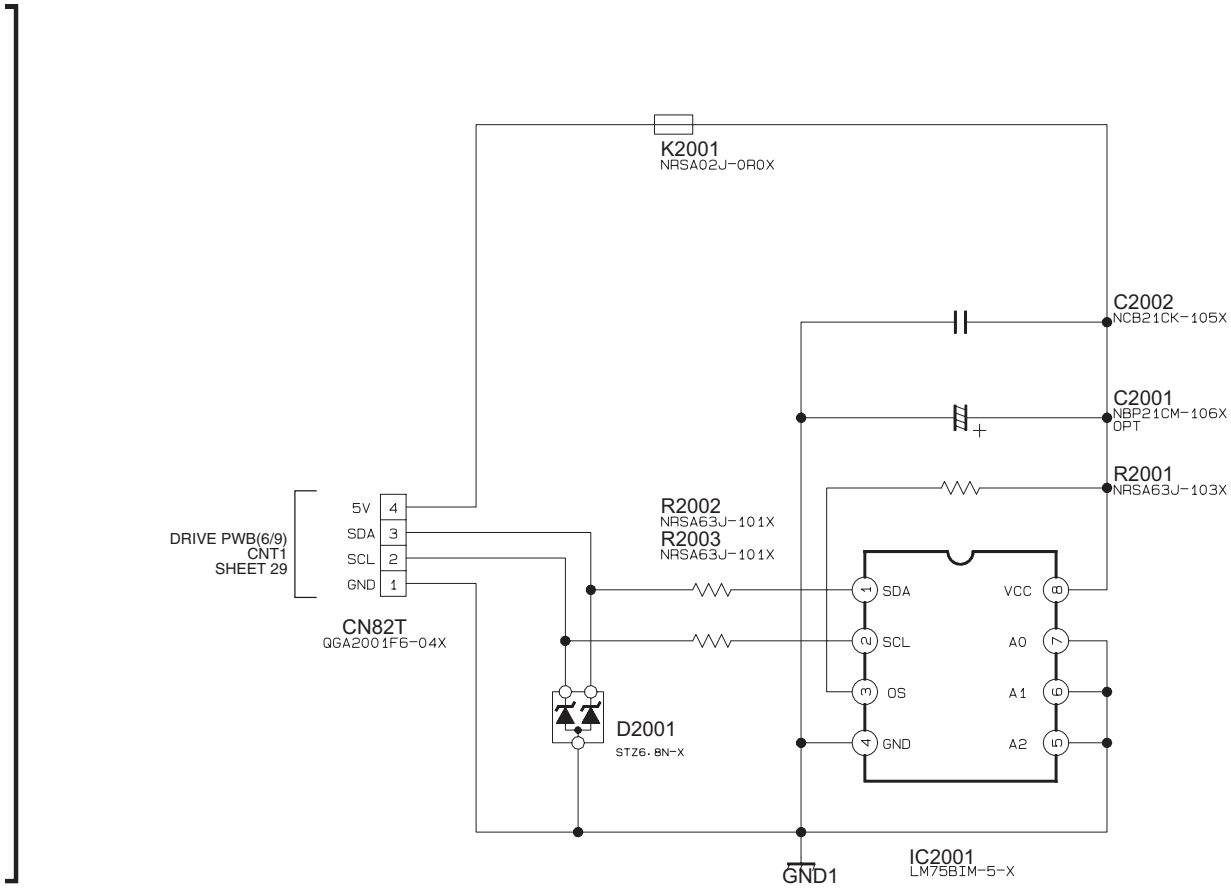

TEMP PWB ASS'Y
SRA-8203A-M2

c40078001_0712_1/1_0.0

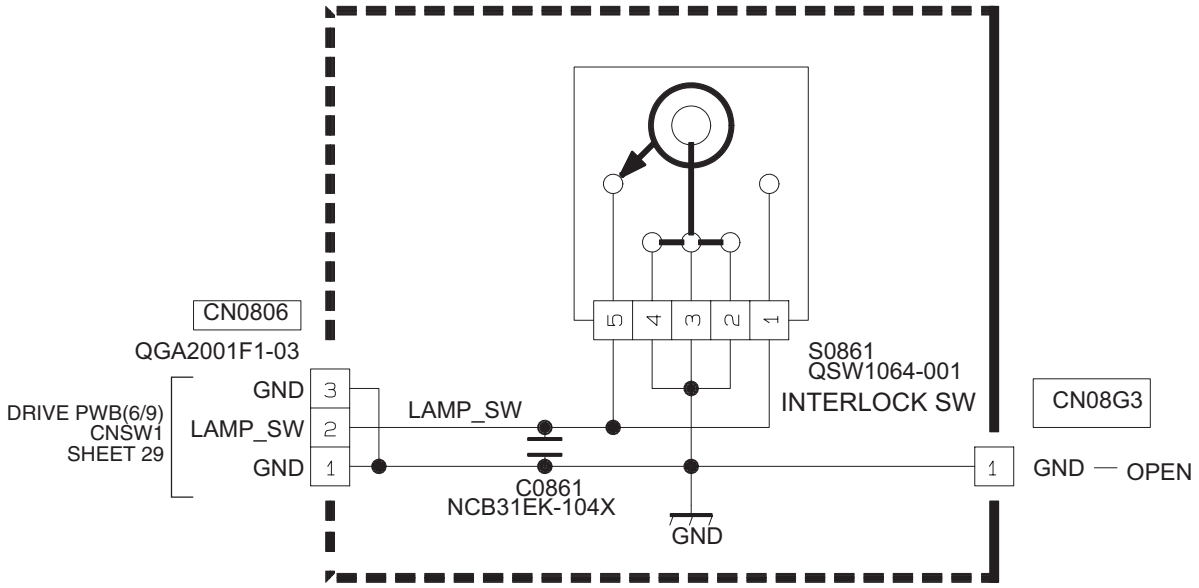

LAMP COVER PWB ASS'Y
SRA0L211A-M2

c40084001_0214_1/1_0.0

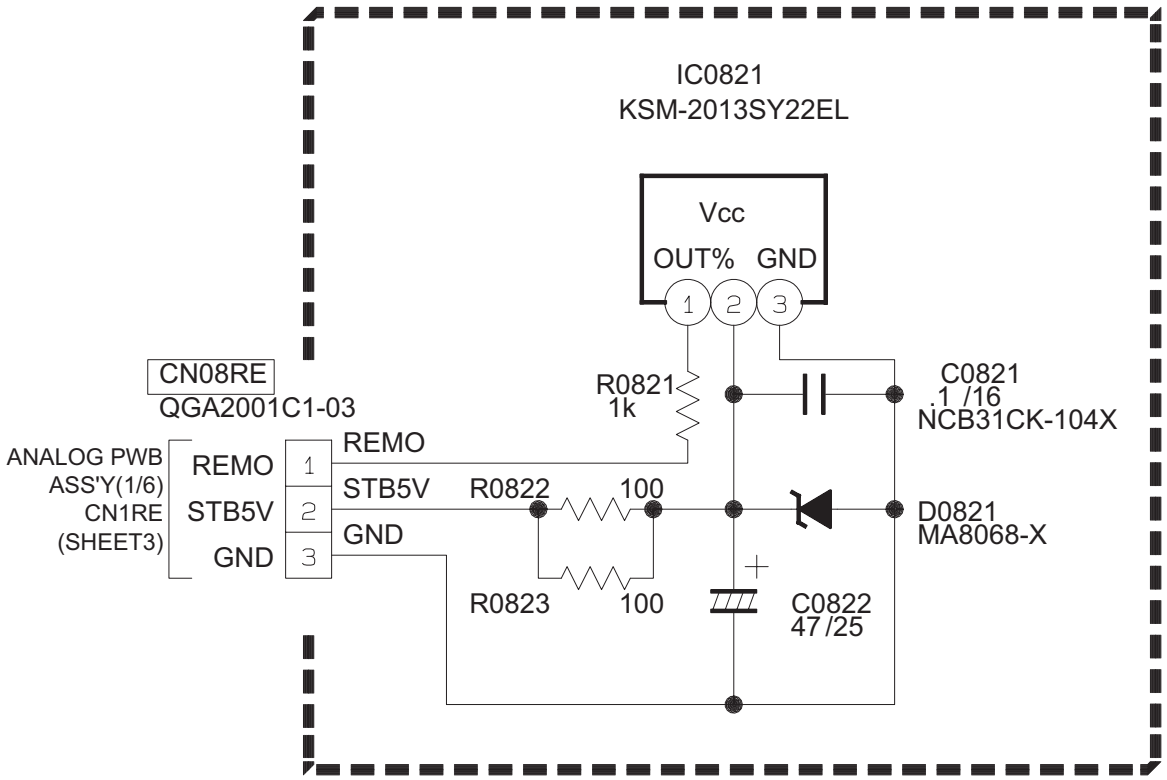

REMOCON PWB ASS'Y
SRA-8011A-M2

c40085001_0214_1/1_0.0

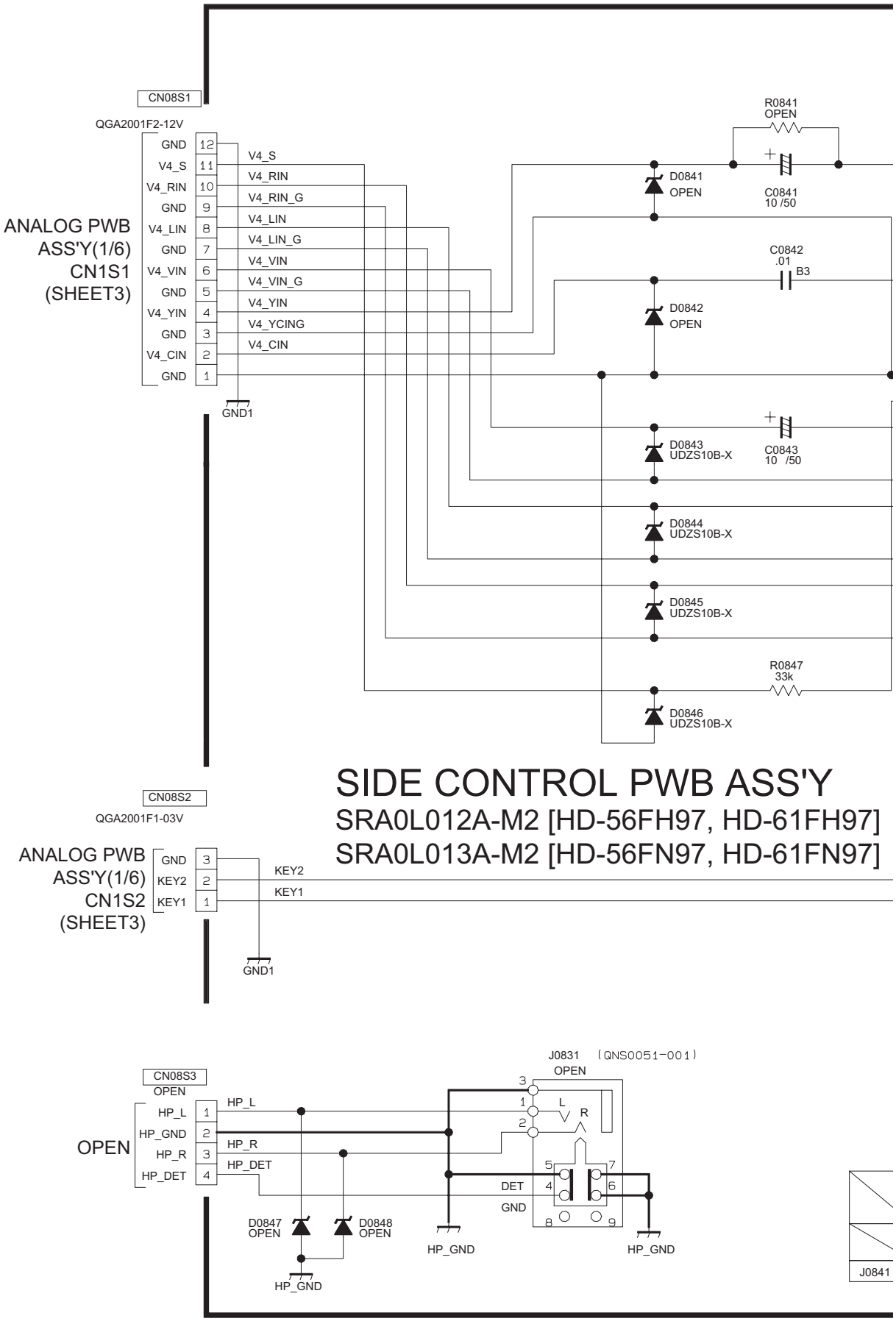
CN08S1
QGA2001F2-12V
ANALOG PWB
ASS'Y(1/6)
CN1S1
(SHEET3)
GND 12
V4_S 11
V4_RIN 10
GND 9
V4_LIN 8
GND 7
V4_VIN 6
GND 5
V4_YIN 4
GND 3
V4_CIN 2
GND 1
V4_S
V4_RIN
V4_RIN_G
V4_LIN
V4_LIN_G
V4_VIN
V4_VIN_G
V4_YIN
V4_YCING
V4_CIN
GND1
R0841
OPEN
D0841
OPEN
C0841
10 /50
C0842
.01
B3
D0842
OPEN
D0843
UDZS10B-X
C0843
10 /50
D0844
UDZS10B-X
D0845
UDZS10B-X
R0847
33k
D0846
UDZS10B-X
SIDE CONTROL PWB ASS'Y
SRA0L012A-M2 [HD-56FH97, HD-61FH97]
SRA0L013A-M2 [HD-56FN97, HD-61FN97]
CN08S2
QGA2001F1-03V
ANALOG PWB
ASS'Y(1/6)
CN1S2
(SHEET3)
GND 3
KEY2 2
KEY1 1
KEY2
KEY1
GND1
CN08S3
OPEN
OPEN
HP_L 1
HP_GND 2
HP_R 3
HP_DET 4
HP_L
HP_R
HP_DET
D0847
OPEN
D0848
OPEN
HP_GND
J0831 (QNS0051-001)
OPEN
L
R
DET
GND
HP_GND
HP_GND
J0841

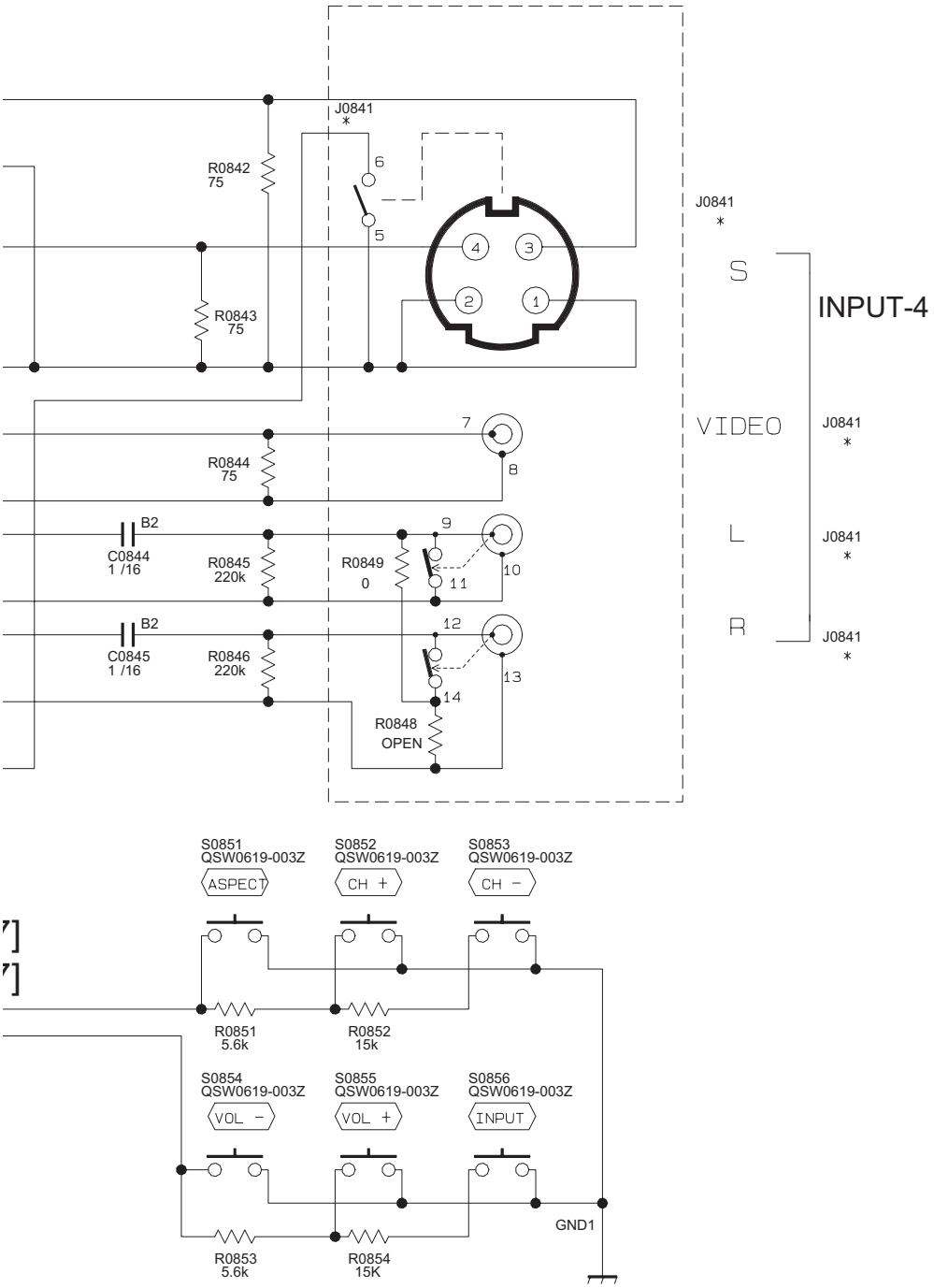

	HD-61G887A HD-56G887A HD-52G887A	HD-61G657A HD-56G657A HD-52G657A	HD-61G587A HD-52G587A	HD-61G567A HD-52G567A	HD-70FH97A HD-61FH97A HD-56FH97A HD-52FH97A	HD-70FN97A HD-61FN97A HD-56FN97A HD-52FN97A	HD-61FC97A HD-56FC97A	HD-56FM97A
	OLLC09901	OLLC09901			OL-CX2749			
0841	QNN0787 -001	QNN0787 -001	QNN0787 -001	QNN0787 -001	QNN0787 -002	QNN0787 -001	QNN0787 -001	QNN0787 -001

c30201001_0216_1/1_0.0

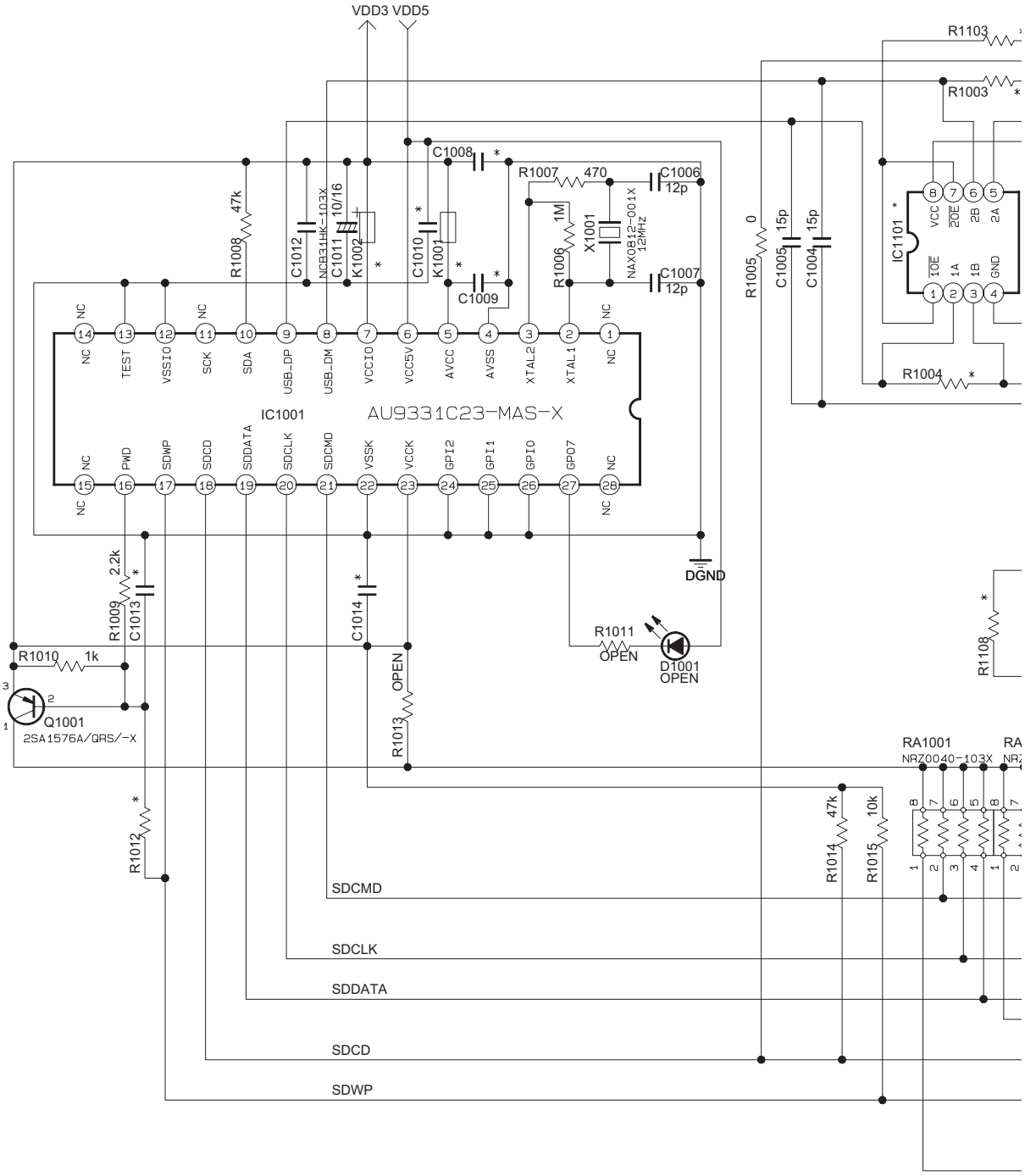
VDD3 VDD5
R1103
R1003
R1004
C1008
R1007
470
C1006
12p
C1007
12p
C1009
R1008
47k
C1012
NCB31HK-103X
C1011
10/16
K1002
C1010
K1001
R1006
1M
X1001
NAX0B12-001X
12MHz
R1005
0
C1005
15p
C1004
15p
IC1101
VCC
2OE
2B
2A
1OE
1A
1B
GND
IC1001
AU9331C23-MAS-X
NC
TEST
VSSIO
SCK
SDA
USB_DP
USB_DM
VCCIO
VCC5V
AVCC
AVSS
XTAL2
XTAL1
PWD
SDWP
SDCD
SDDATA
SDCLK
SDCMD
VSSK
VCCK
GPI2
GPI1
GPIO
GPO7
DGND
R1009
2.2k
C1013
C1014
R1010
1k
Q1001
2SA1576A/QRS/-X
R1011
OPEN
D1001
OPEN
R1013
OPEN
R1108
RA1001
NRZ0040-103X
R1012
R1014
47k
R1015
10k
SDCMD
SDCLK
SDDATA
SDCD
SDWP

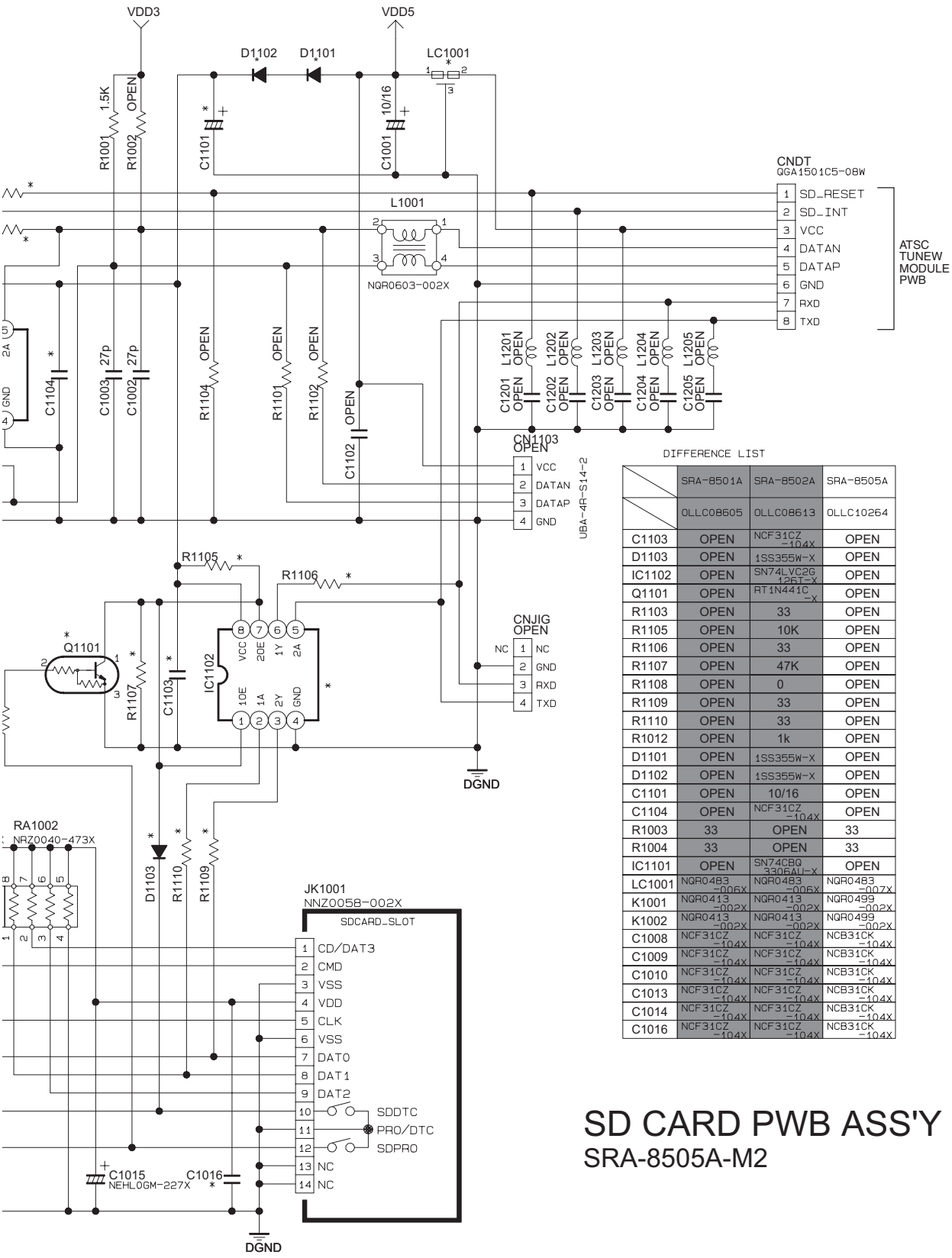

DIFFERENCE LIST

	SRA-8501A	SRA-8502A	SRA-8505A
	OLLC08605	OLLC08613	OLLC10264
C1103	OPEN	NCF31CZ -104X	OPEN
D1103	OPEN	1SS355W-X	OPEN
IC1102	OPEN	SN74LVC2G 126T-X	OPEN
Q1101	OPEN	RT1N441C -X	OPEN
R1103	OPEN	33	OPEN
R1105	OPEN	10K	OPEN
R1106	OPEN	33	OPEN
R1107	OPEN	47K	OPEN
R1108	OPEN	0	OPEN
R1109	OPEN	33	OPEN
R1110	OPEN	33	OPEN
R1012	OPEN	1k	OPEN
D1101	OPEN	1SS355W-X	OPEN
D1102	OPEN	1SS355W-X	OPEN
C1101	OPEN	10/16	OPEN
C1104	OPEN	NCF31CZ -104X	OPEN
R1003	33	OPEN	33
R1004	33	OPEN	33
IC1101	OPEN	SN74CBQ 3306AU-X	OPEN
LC1001	NQR0483 -006X	NQR0483 -006X	NQR0483 -007X
K1001	NQR0413 -002X	NQR0413 -002X	NQR0499 -002X
K1002	NQR0413 -002X	NQR0413 -002X	NQR0499 -002X
C1008	NCF31CZ -104X	NCF31CZ -104X	NCB31CK -104X
C1009	NCF31CZ -104X	NCF31CZ -104X	NCB31CK -104X
C1010	NCF31CZ -104X	NCF31CZ -104X	NCB31CK -104X
C1013	NCF31CZ -104X	NCF31CZ -104X	NCB31CK -104X
C1014	NCF31CZ -104X	NCF31CZ -104X	NCB31CK -104X
C1016	NCF31CZ -104X	NCF31CZ -104X	NCB31CK -104X

SD CARD PWB ASS'Y

SRA-8505A-M2

c30186001_0712_1/1_0.0

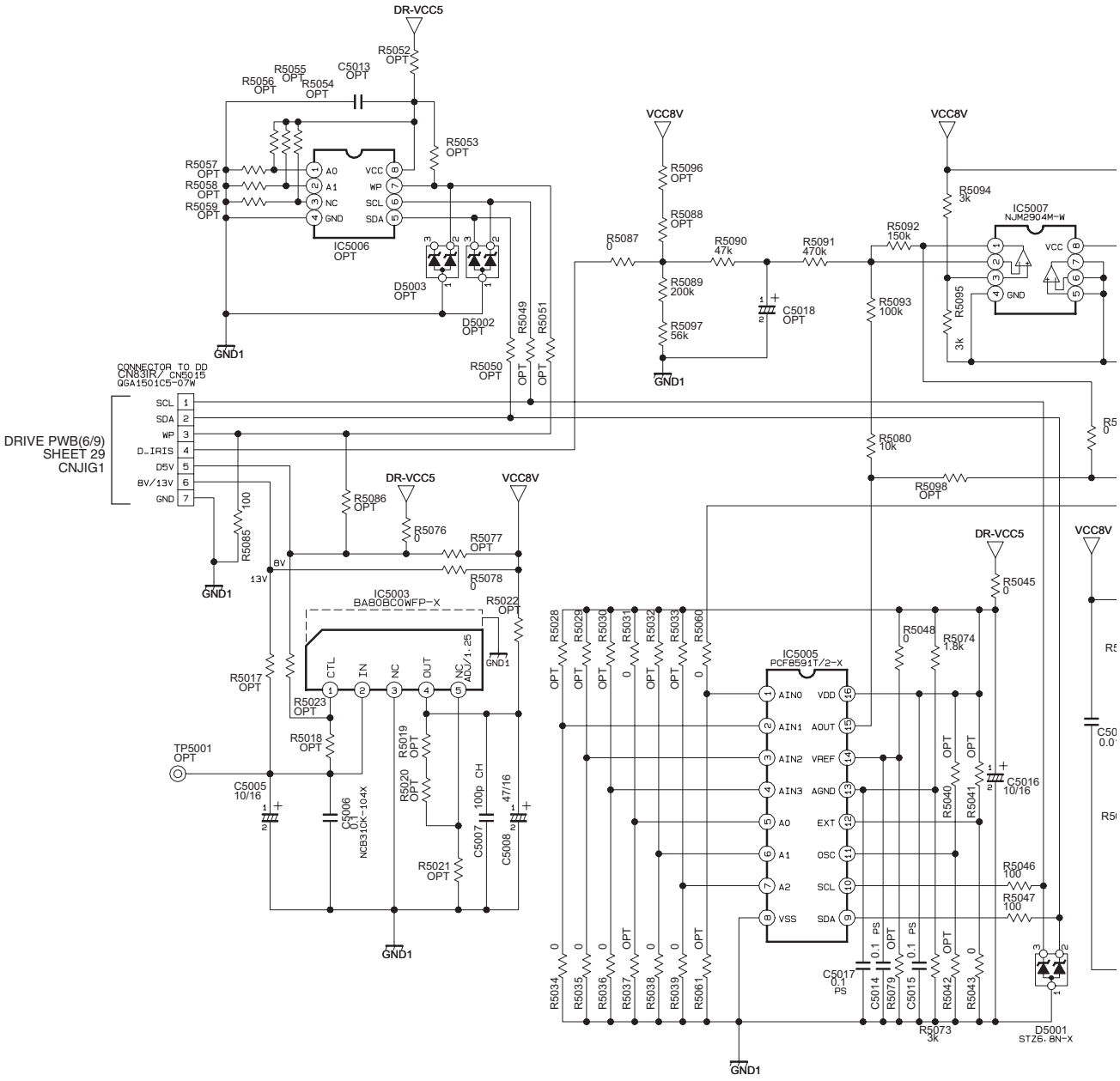
DR-VCC5
VCC8V
GND1
IC5006
OPT
IC5007
NJM2904M-W
IC5003
BA80BC0WFP-X
IC5005
PCF8591T/2-X
CONNECTOR TO DD
CN83IR / CN5015
QGA1501C5-07W
SCL
SDA
WP
D_IRIS
D5V
8V/13V
GND
DRIVE PWB(6/9)
SHEET 29
CNJIG1
TP5001
D5001
STZ6.8N-X

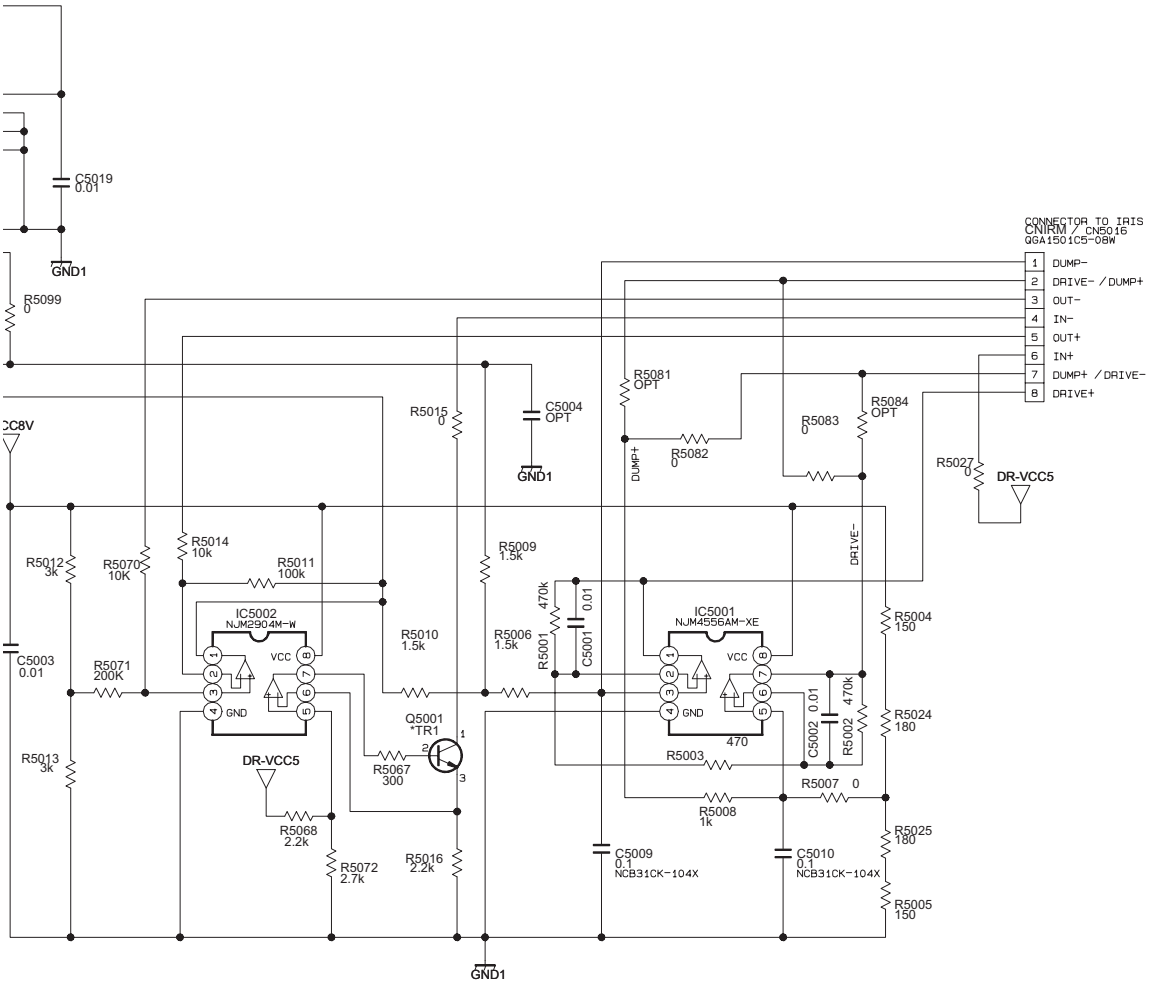

IRIS PWB ASS'Y

SRA-8303A-M2

c20185001_0712_1/1_0.0

PATTERN DIAGRAMS

TUNER PWB PATTERN [SOLDER SIDE]

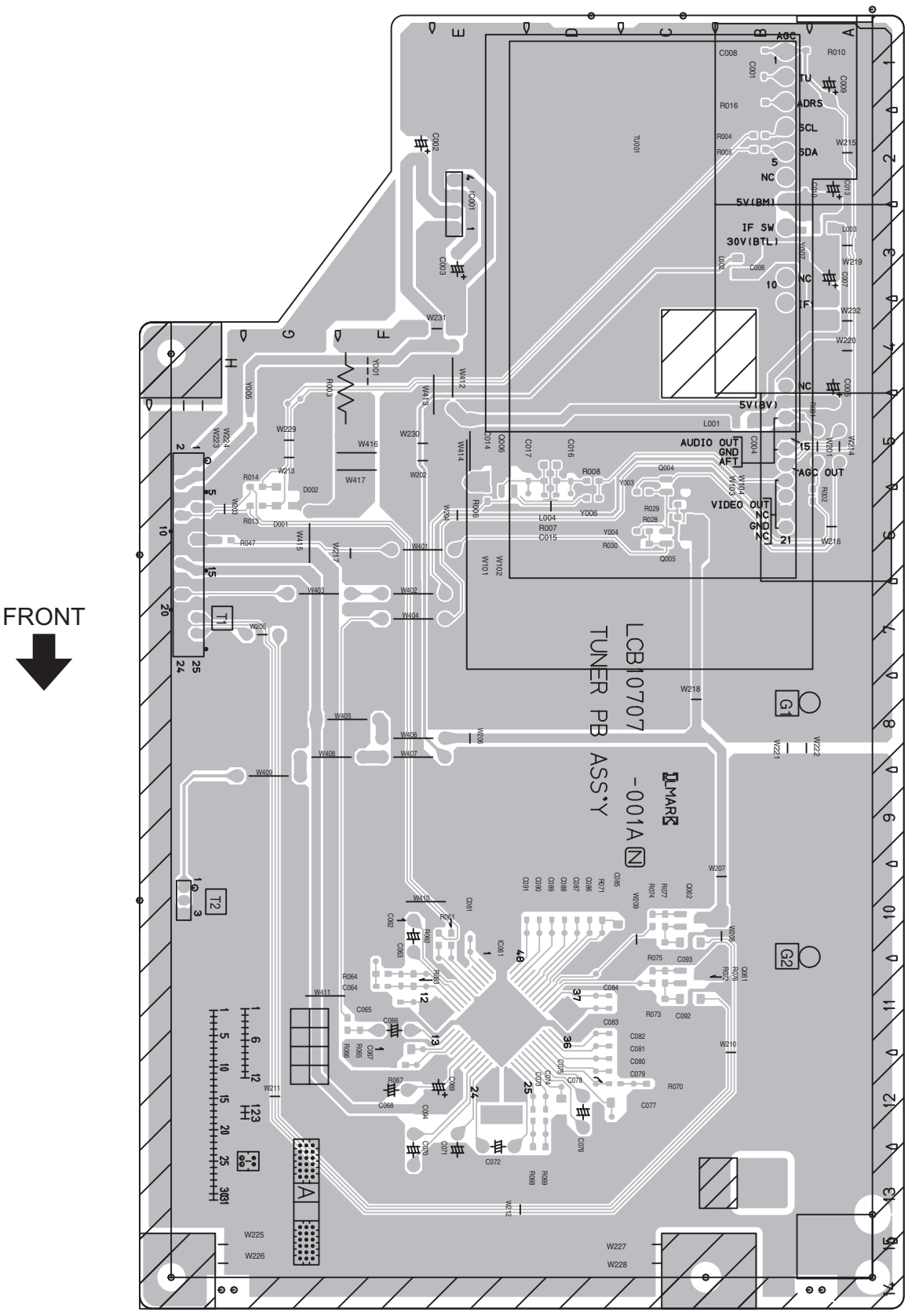

IRIS PWB PATTERN [SOLDER SIDE]

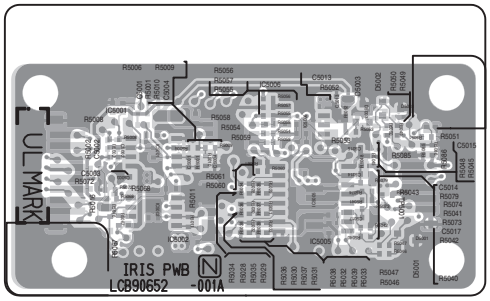

FRONT

IRIS PWB PATTERN [PARTS SIDE]

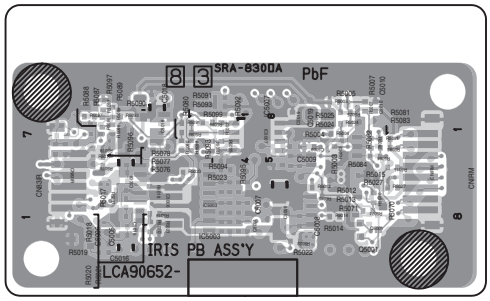

FRONT

ANALOG PWB PATTERN [SOLDER SIDE]

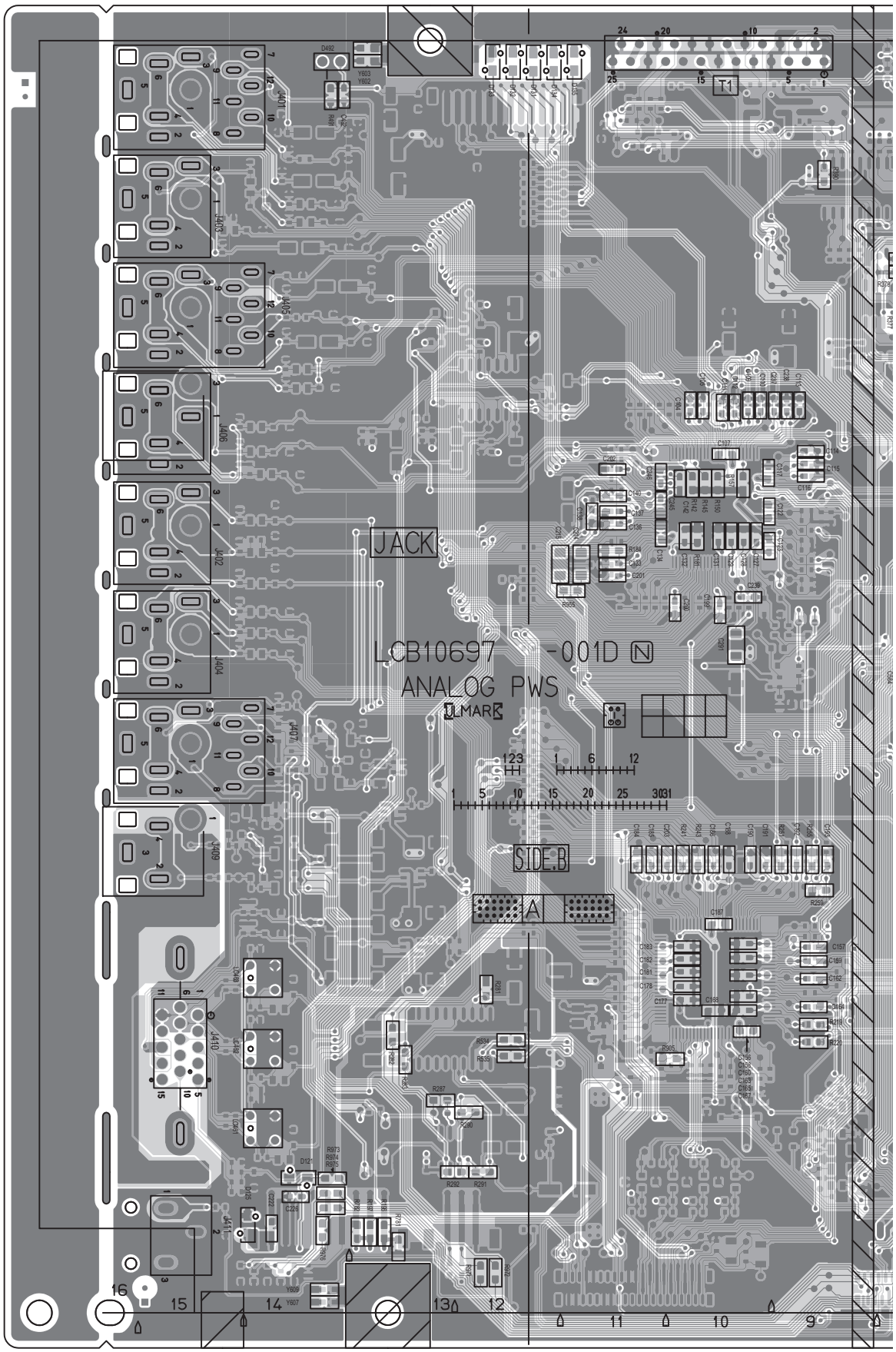

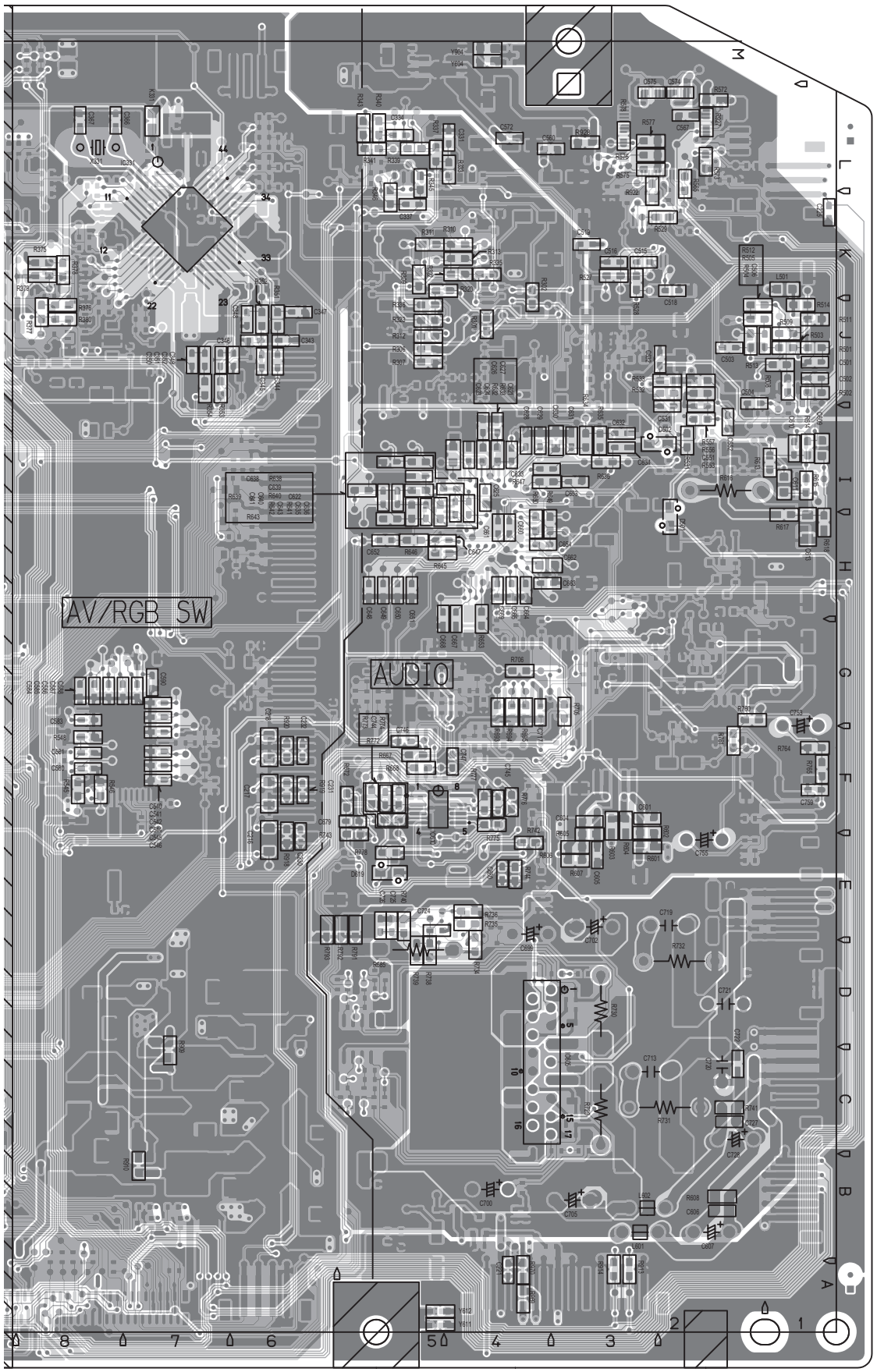
AV/RGB SW
AUDIO
TOP
FRONT

ANALOG PWB PATTERN [PARTS SIDE]

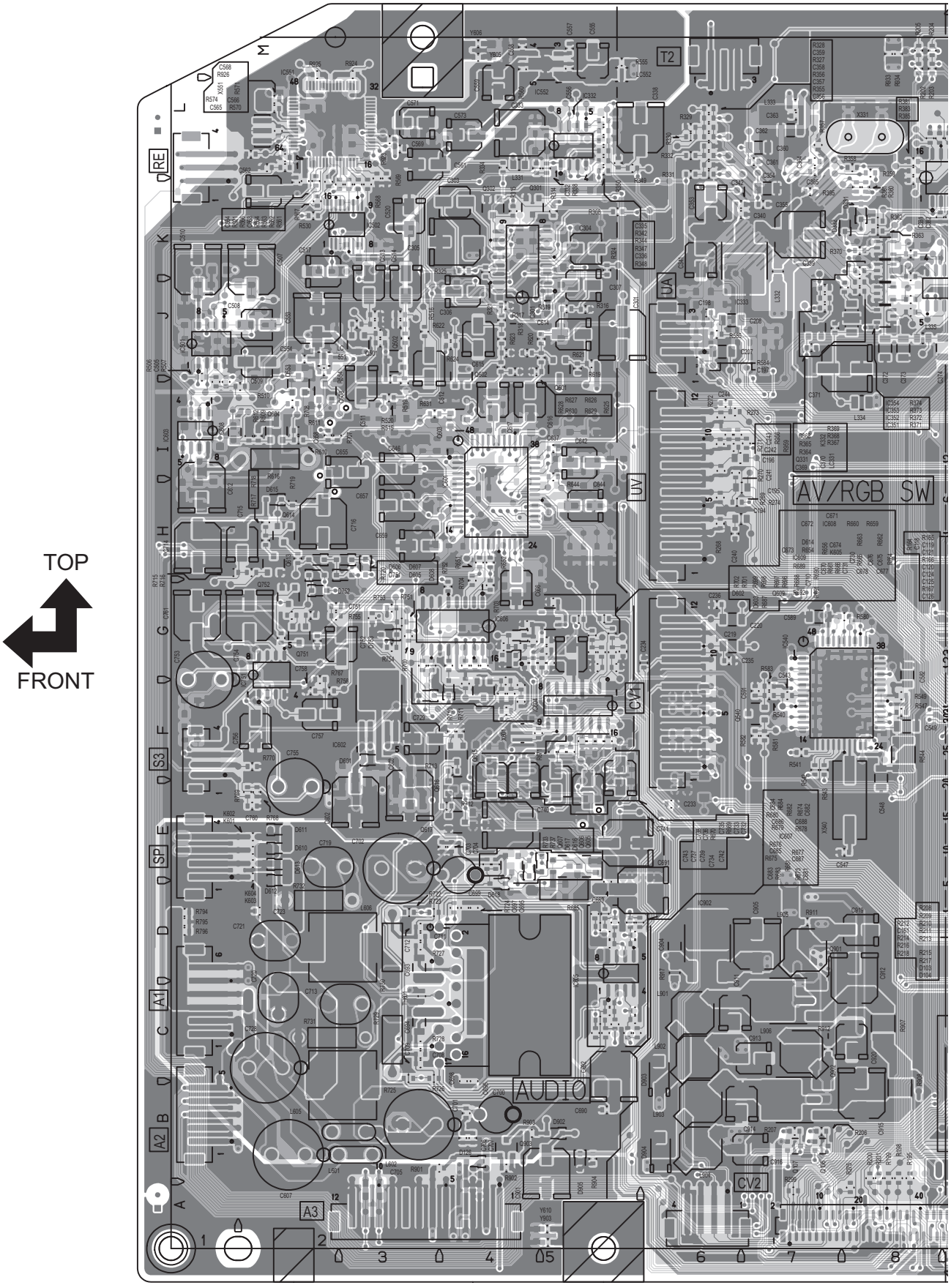

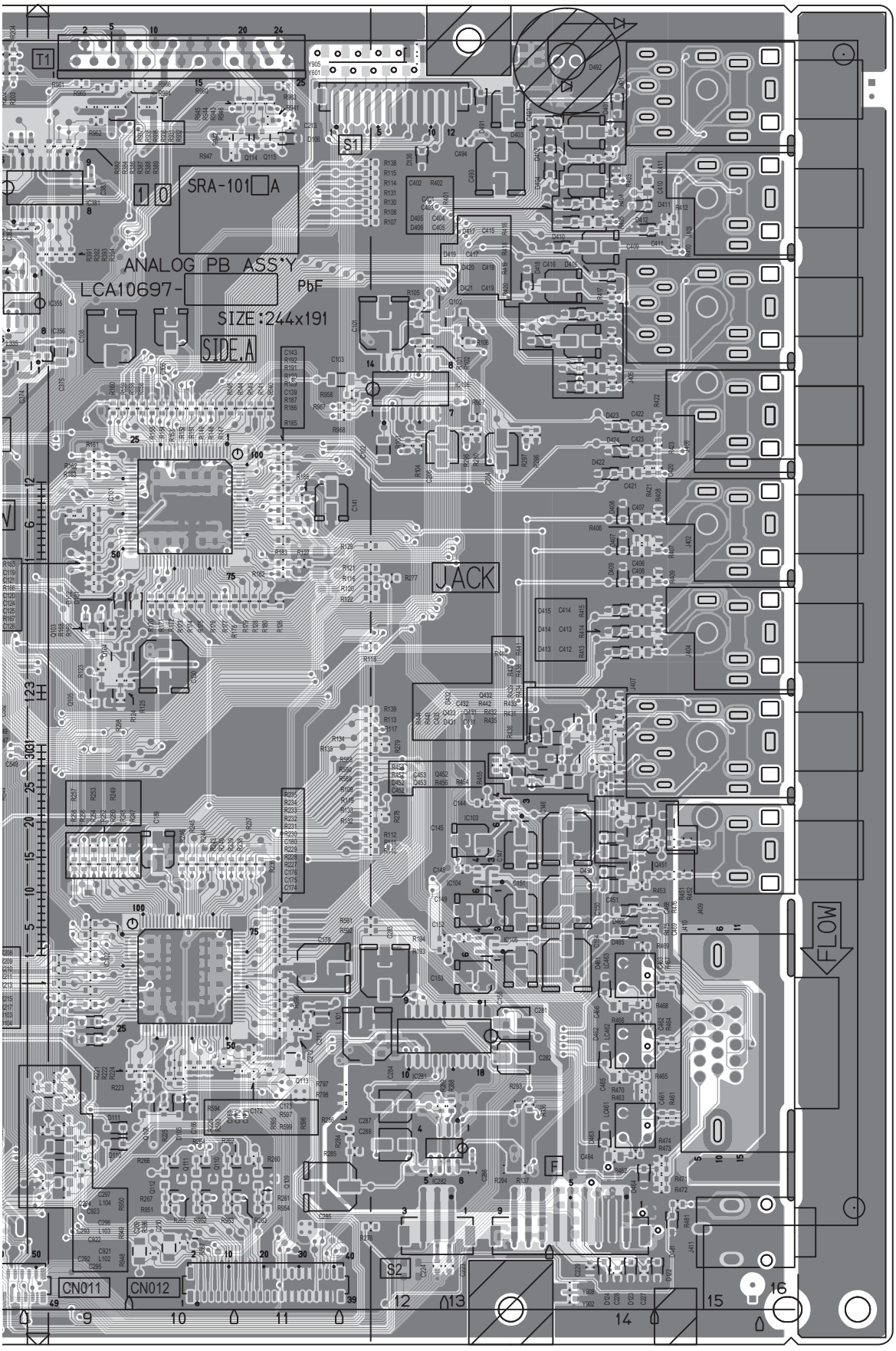
SRA-101□A
ANALOG PB ASS'Y
LCA10697-
PbF
SIZE:244x191
SIDE A
JACK
FLOW
CN011
CN012
S1
S2
T1

DIGITAL PWB PATTERN [SOLDER SIDE]

FRONT

TOP

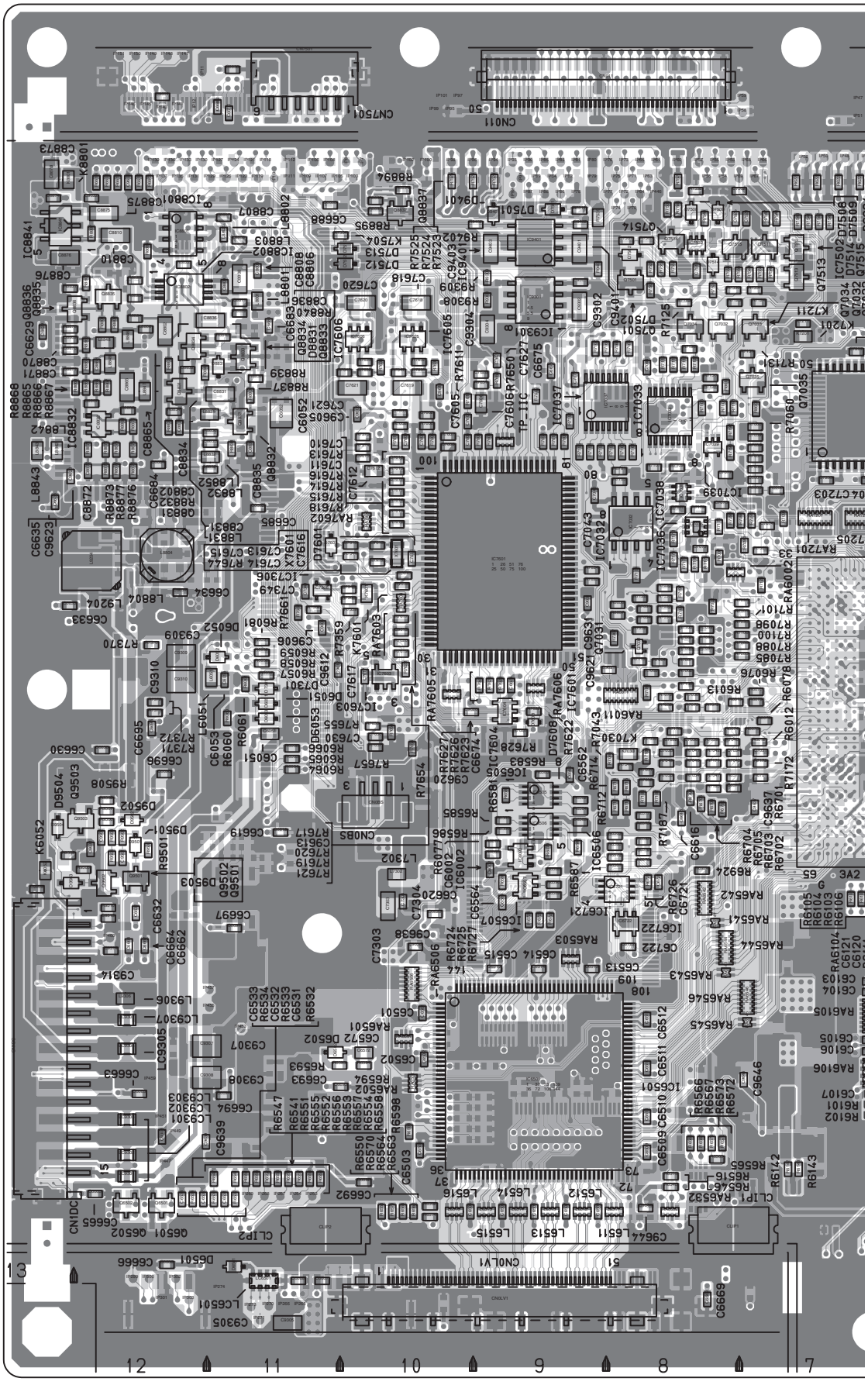

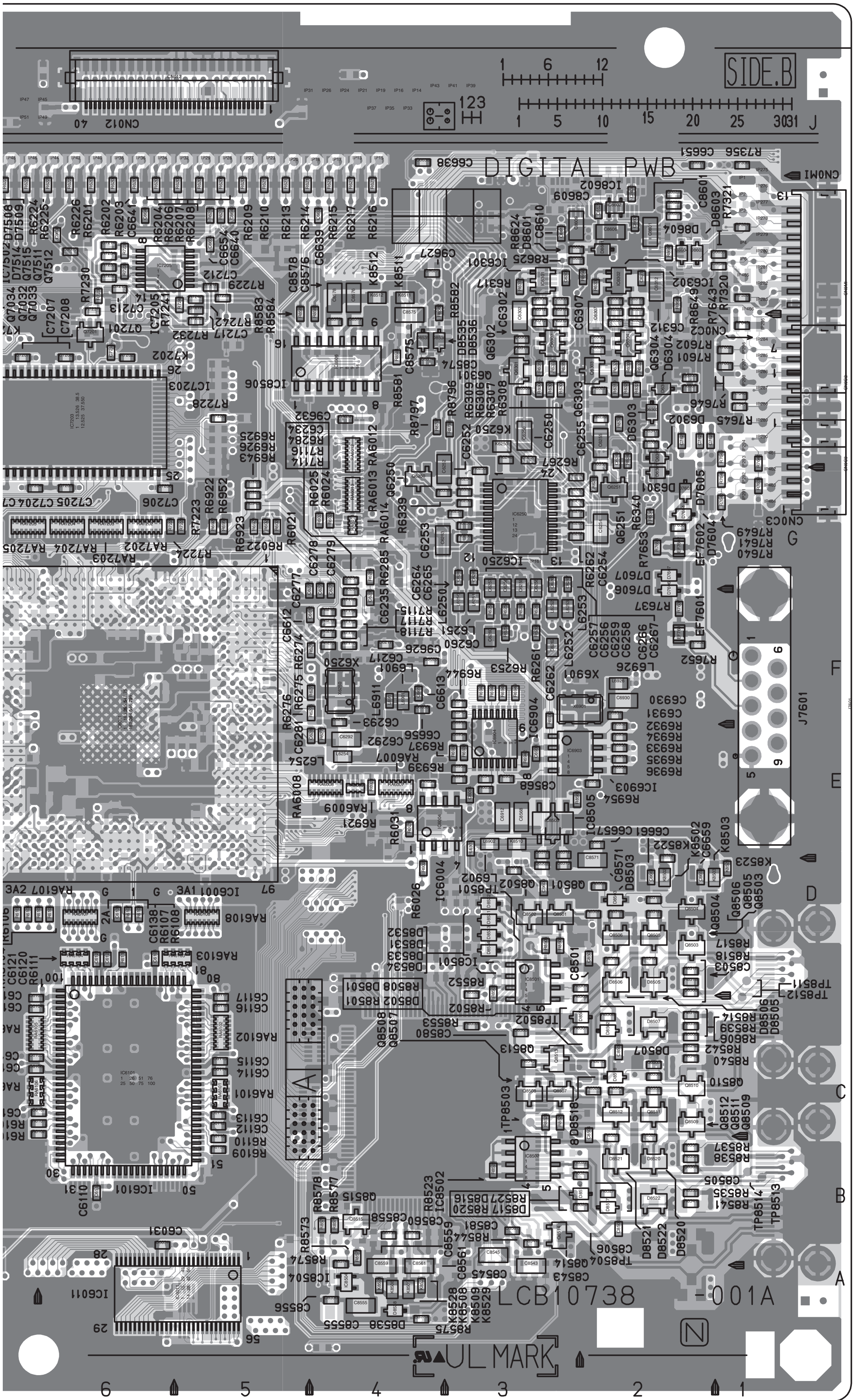
DIGITAL PWB
SIDE.B
LCB10738 -001A
UL MARK
J7601
CN012

DIGITAL PWB PATTERN [PARTS SIDE]

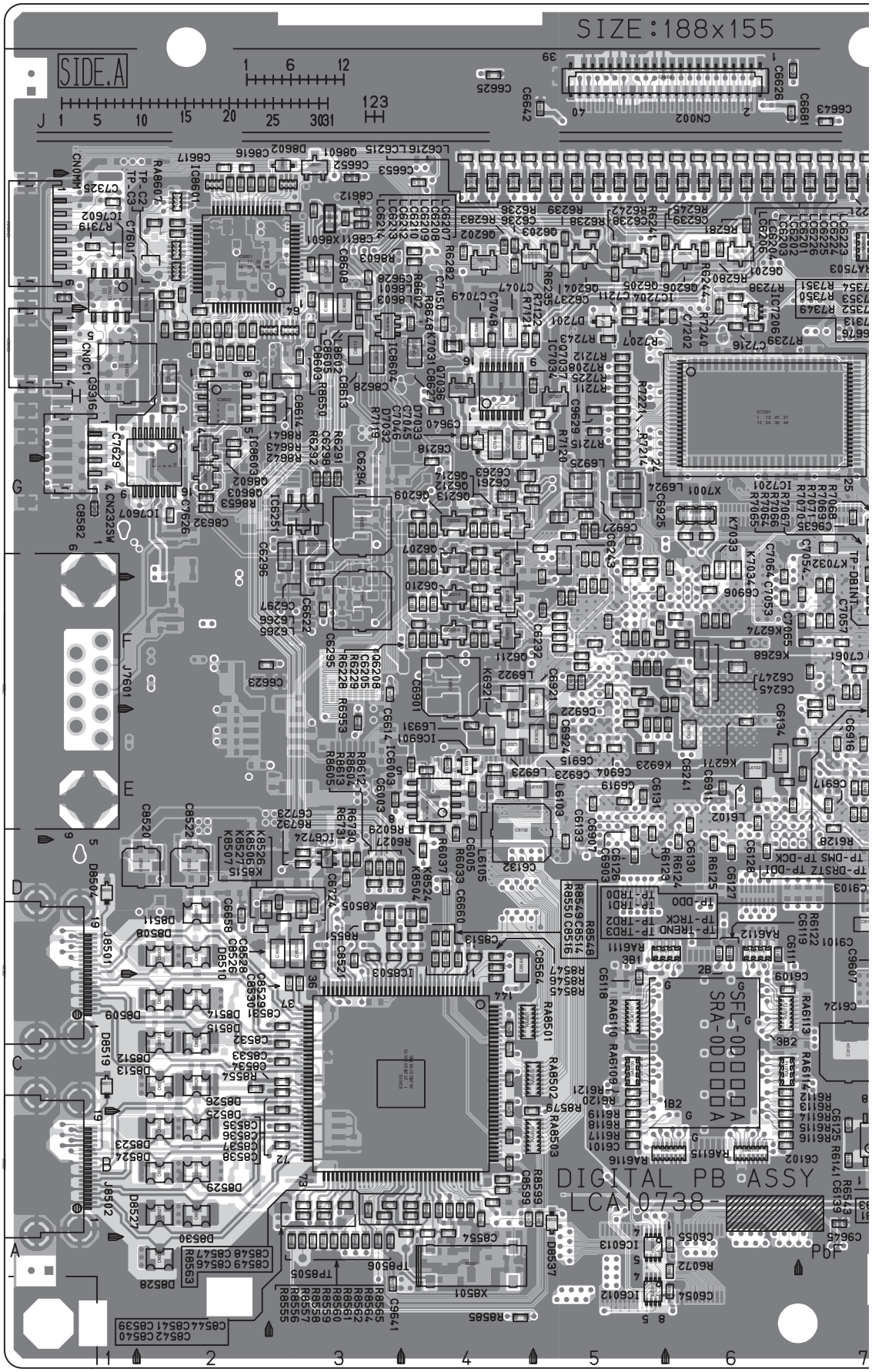

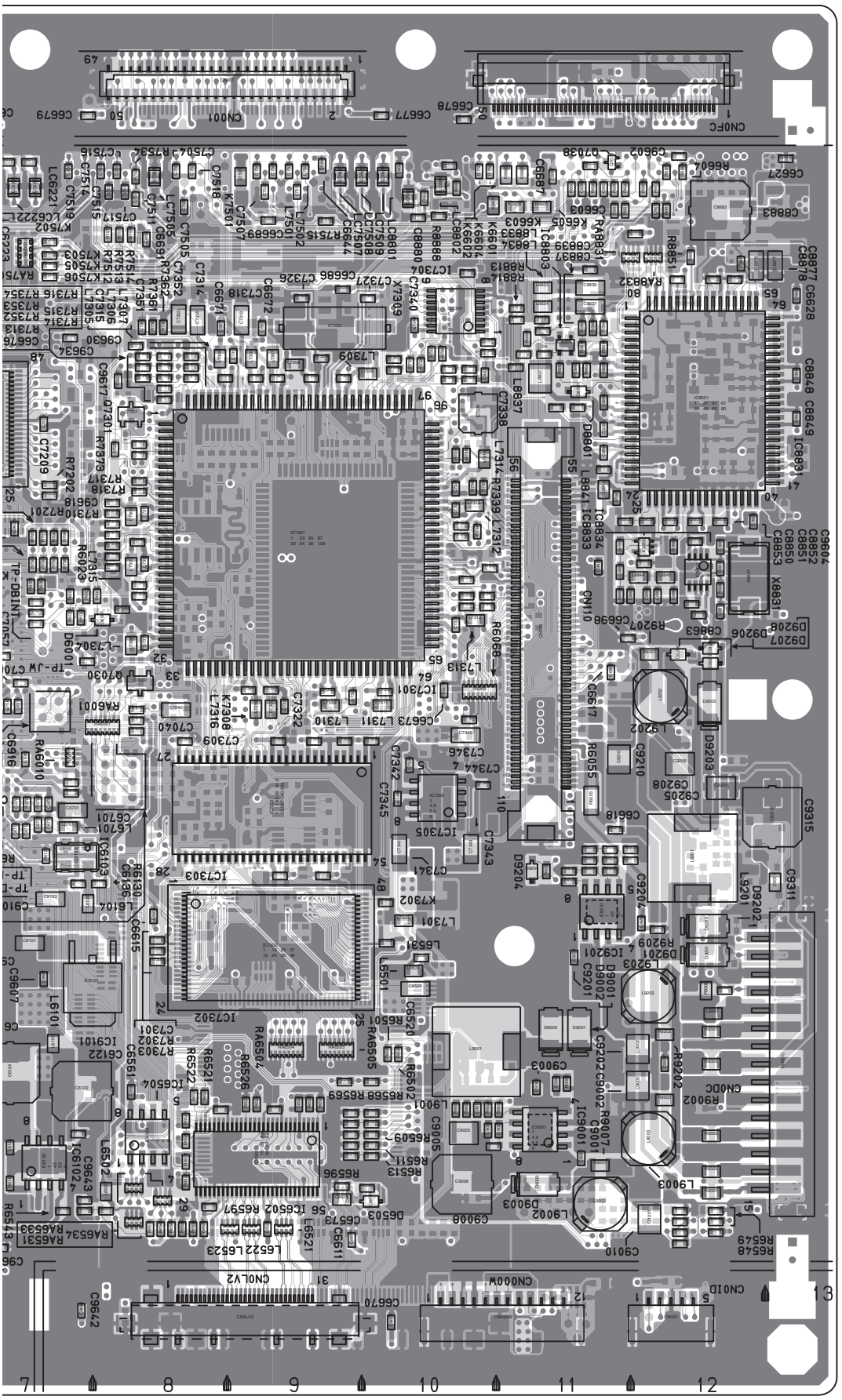

FRONT

TOP

DRIVE PWB PATTERN [SOLDER SIDE]

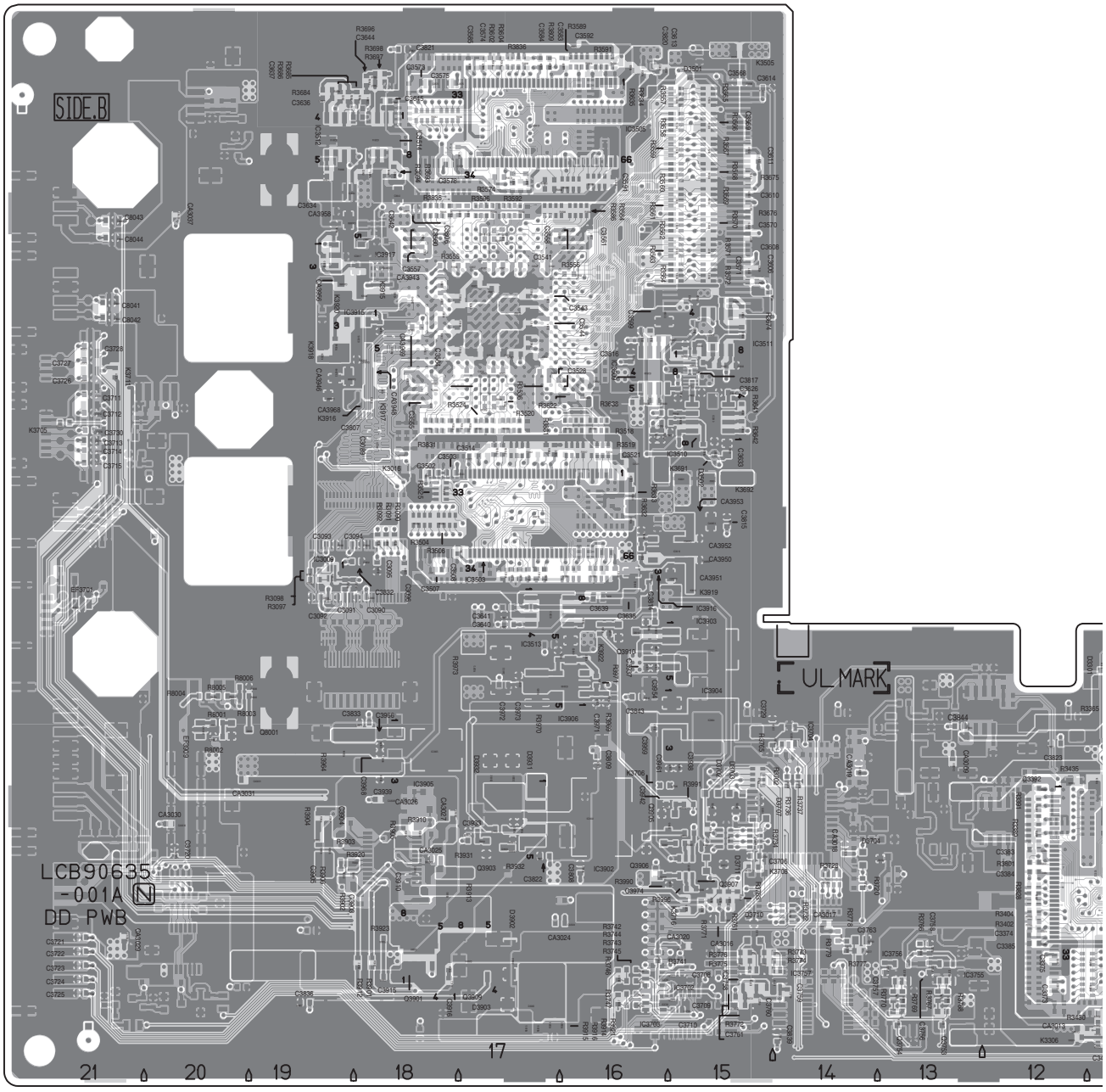

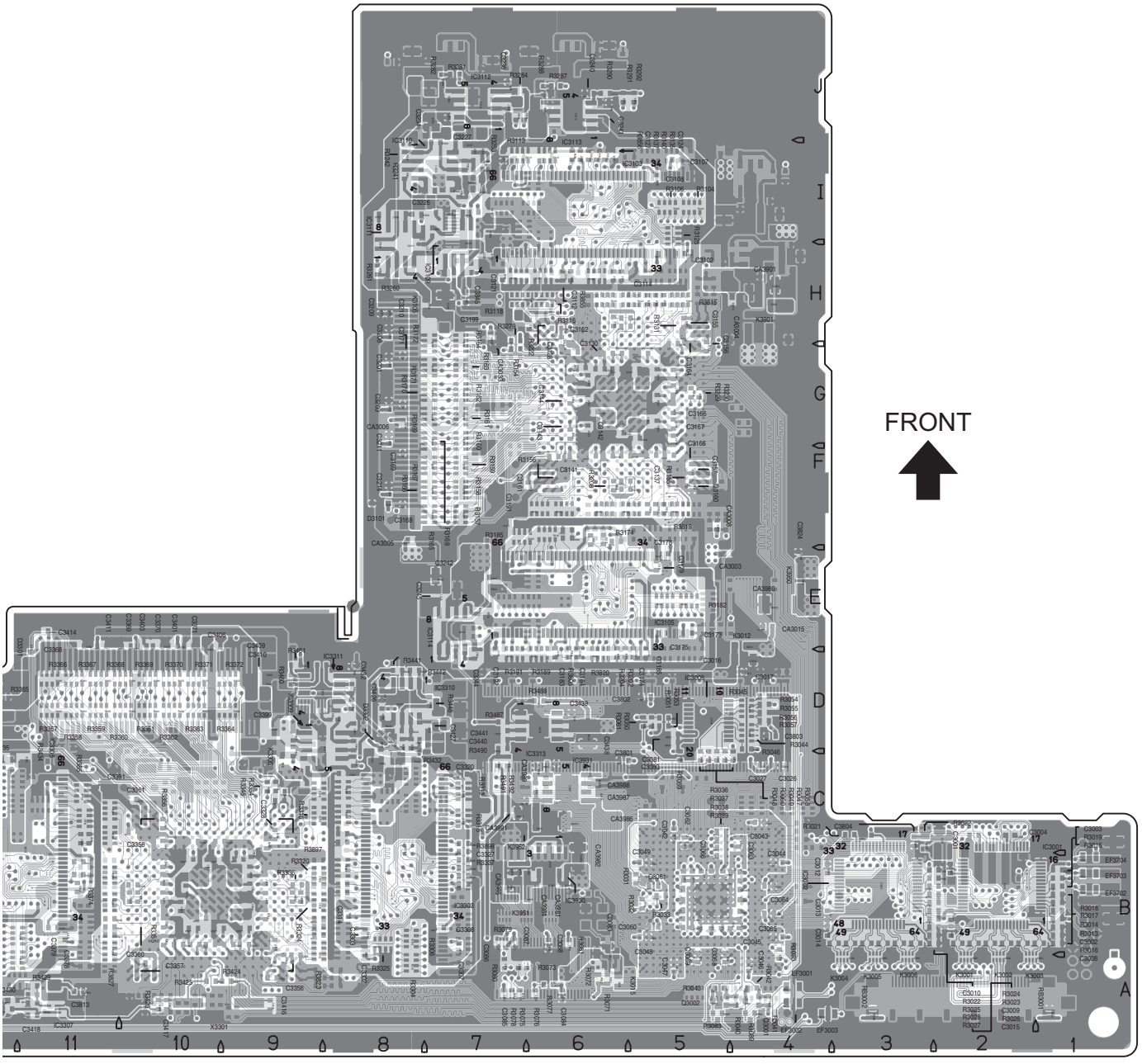
FRONT

DRIVE PWB PATTERN [PARTS SIDE]

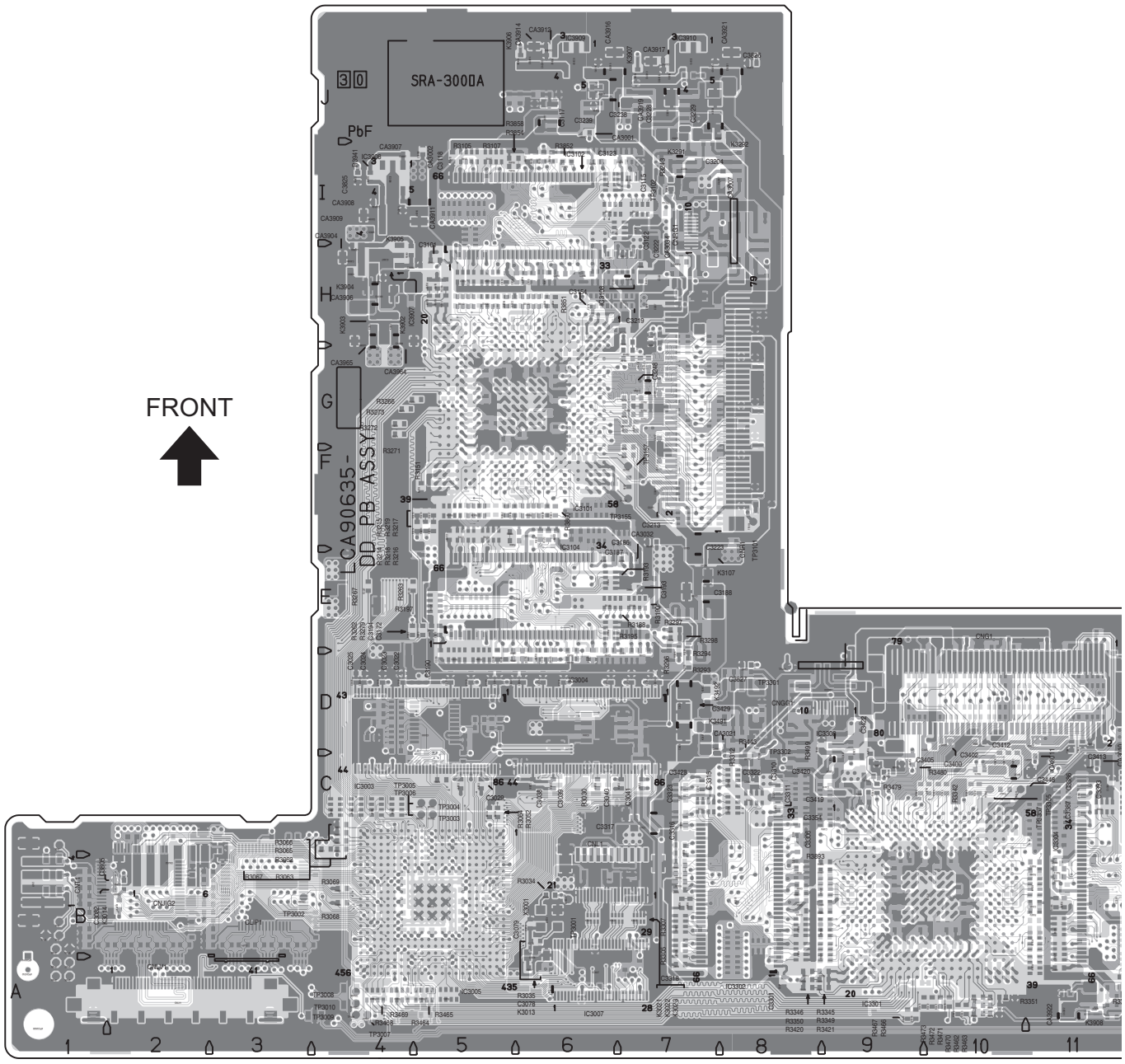

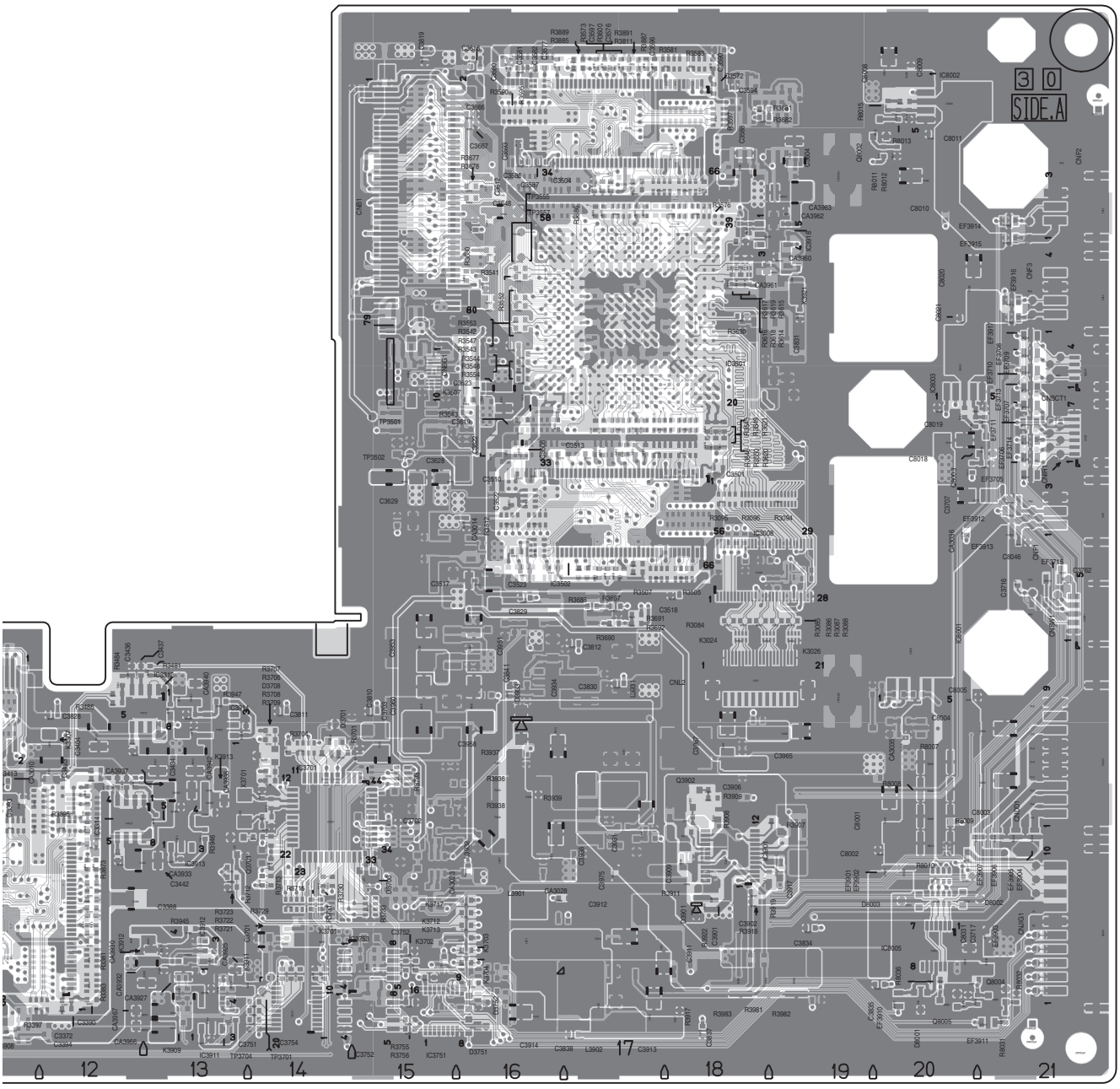
SIDE.A

POWER PWB PATTERN [SOLDER SIDE]

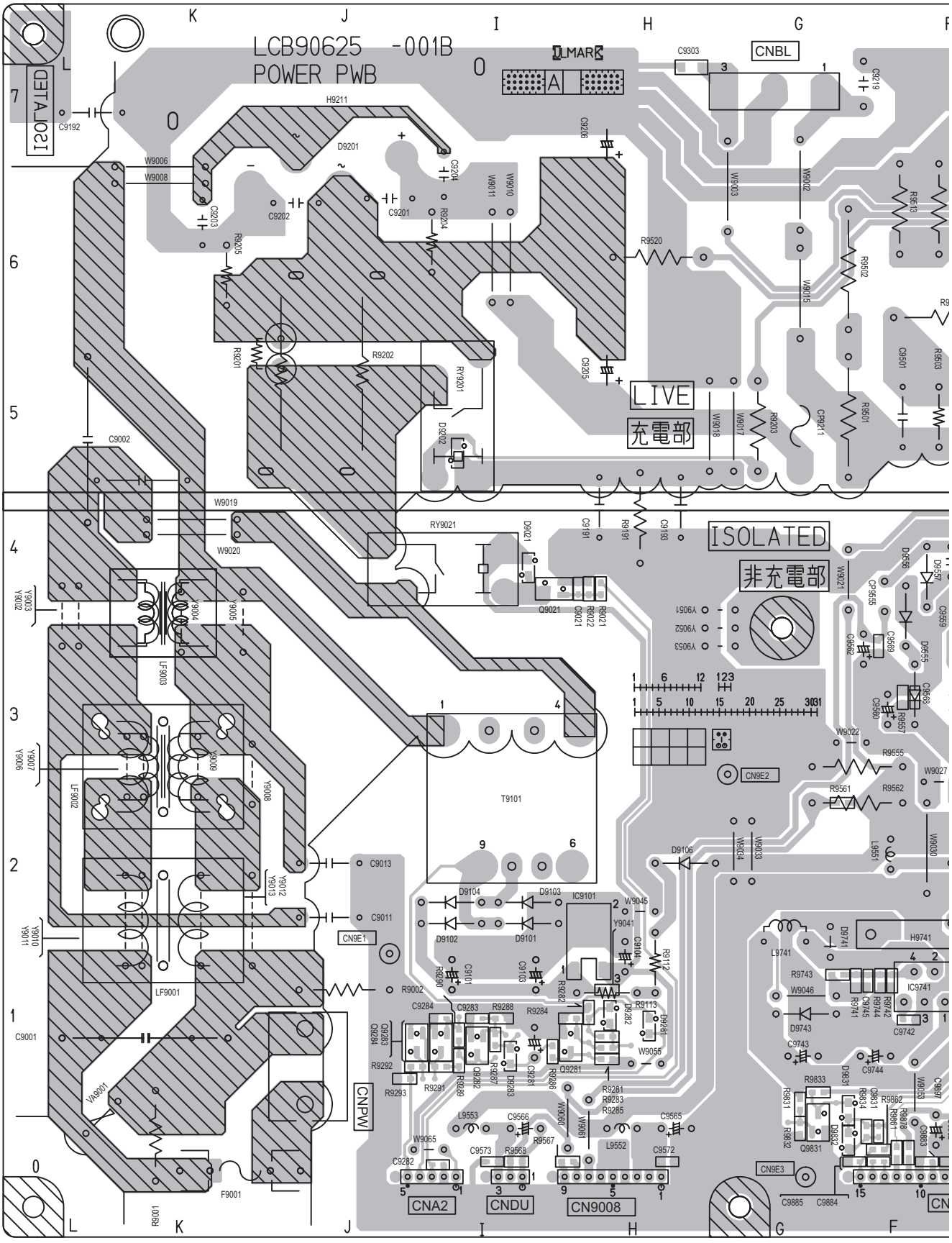

CAUTION :
FOR CONTINUED PROTECTION AGAINST FIRE HAZARD,
REPLACE ONLY WITH SAME TYPE AND RATED FUSE(S)
AND ROHM'S MFR'S TYPE CP(S).

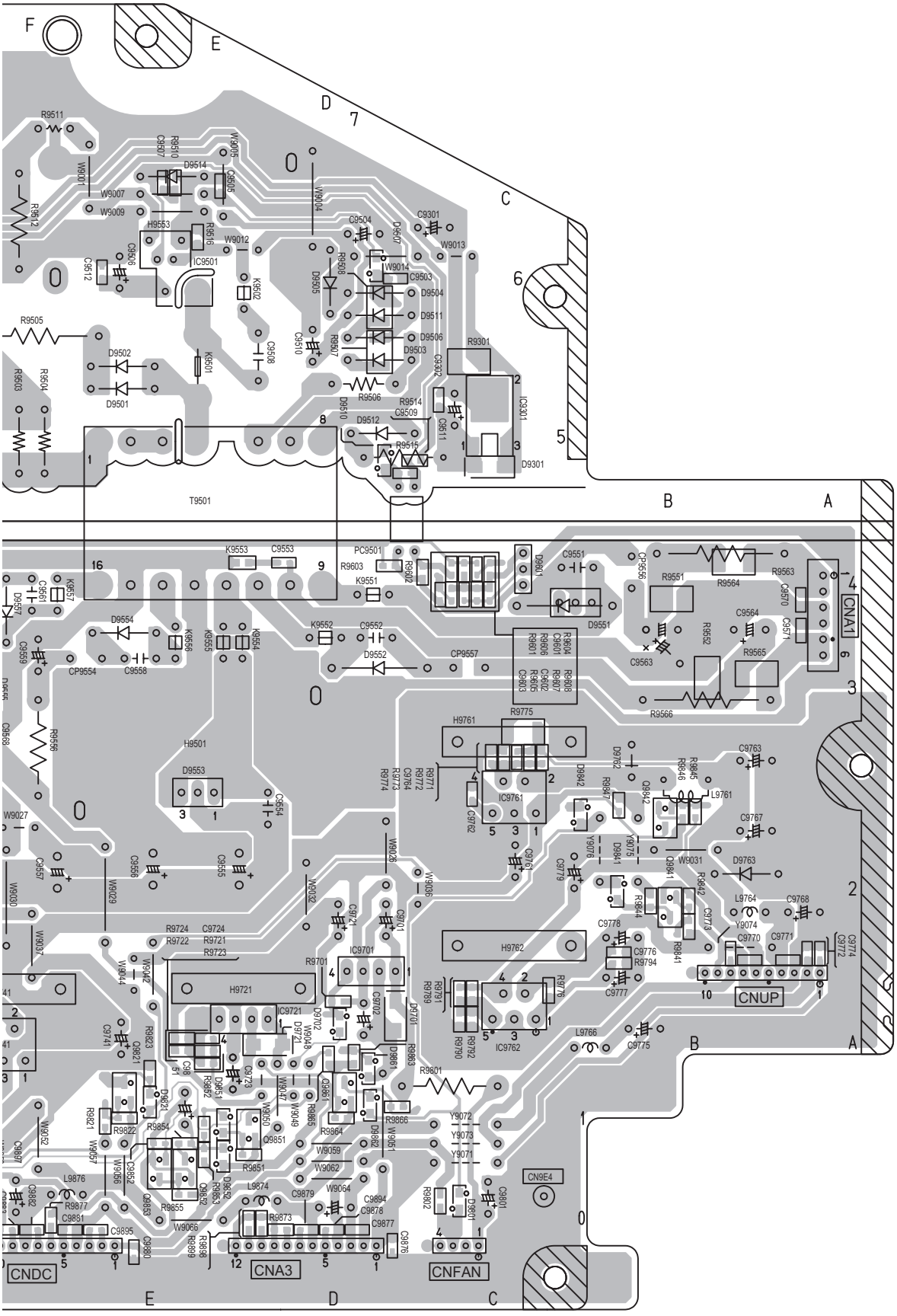

POWER PWB PATTERN [PARTS SIDE]

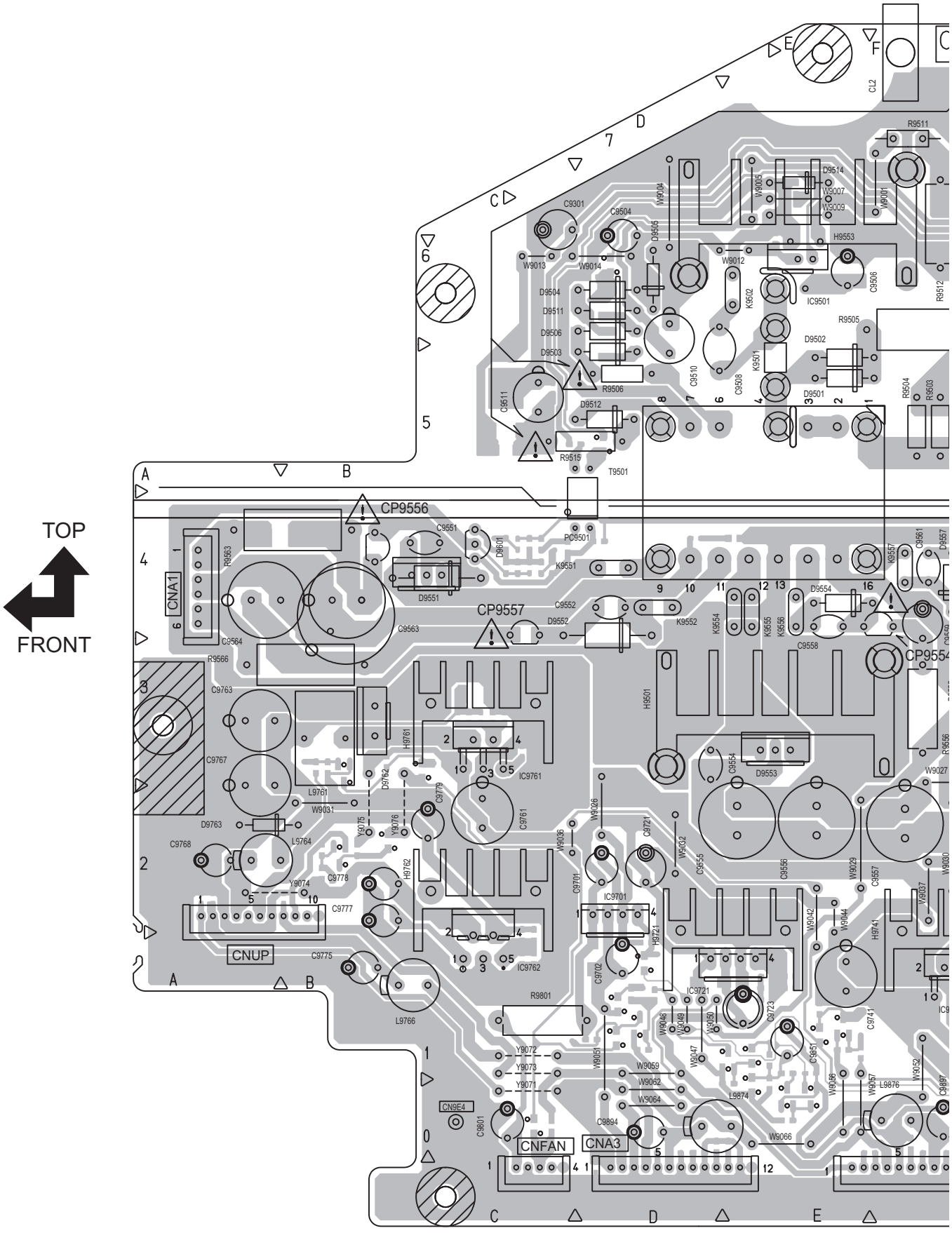

CAUTION :
FOR CONTINUED PROTECTION AGAINST FIRE HAZARD,
REPLACE ONLY WITH SAME TYPE AND RATED FUSE(S)
AND ROHM'S MFR'S TYPE CP(S).

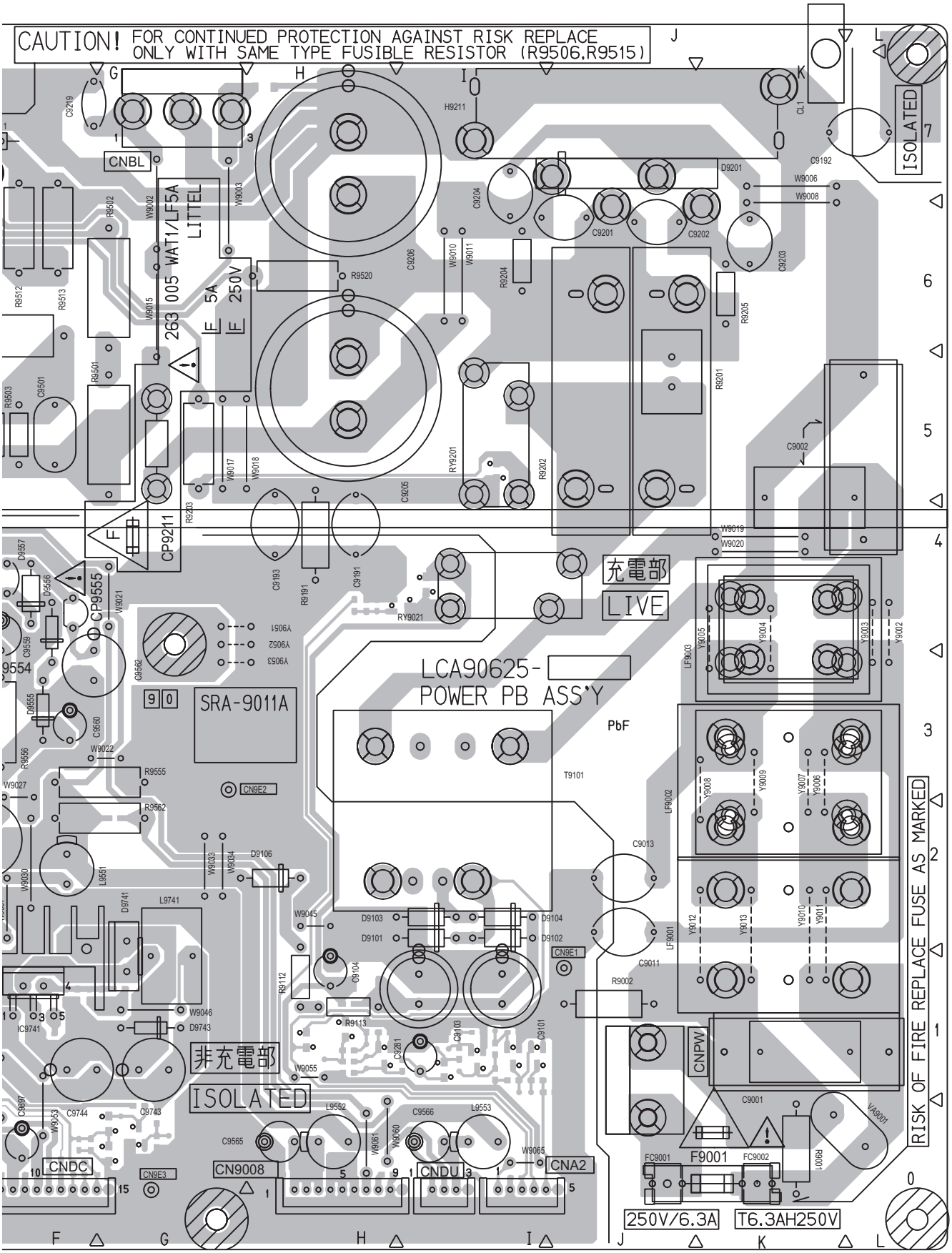

FRONT LED PWB PATTERN [SOLDER SIDE]

TOP

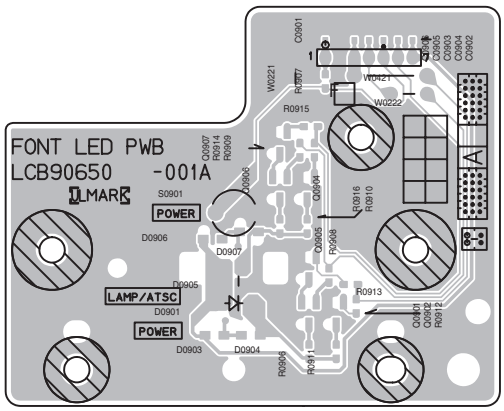

SIDE CONTROL PWB PATTERN [SOLDER SIDE]

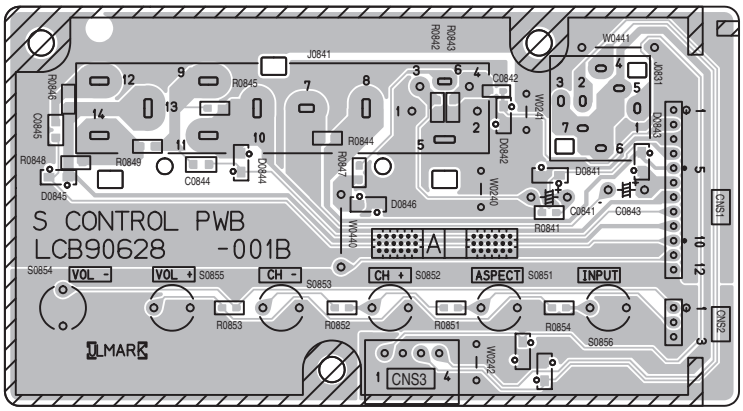

TOP

SIDE CONTROL PWB PATTERN [PARTS SIDE]

TOP

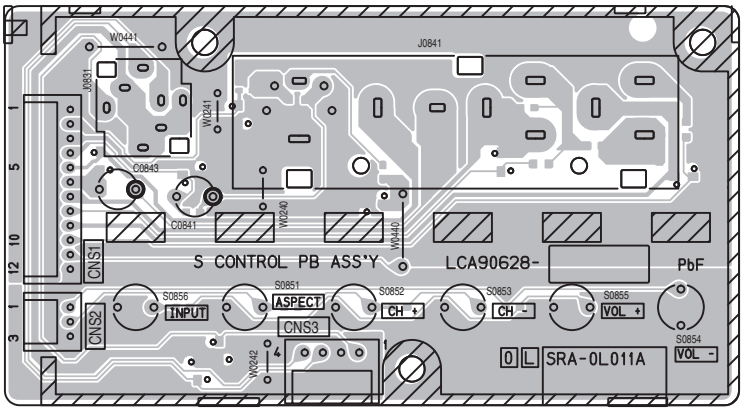

TEMP PWB PATTERN [SOLDER SIDE]

TOP

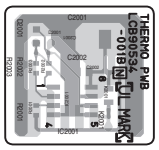

TEMP PWB PATTERN [PARTS SIDE]

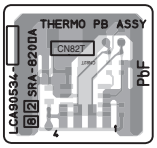

TOP

LAMP COVER PWB PATTERN

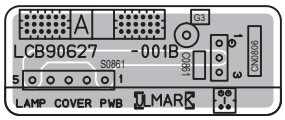

TOP

REMOCON PWB PATTERN

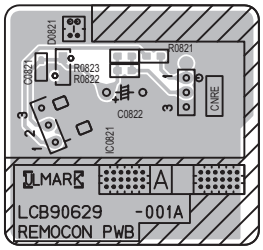

TOP

SD CARD PWB PATTERN [SOLDER SIDE]

TOP

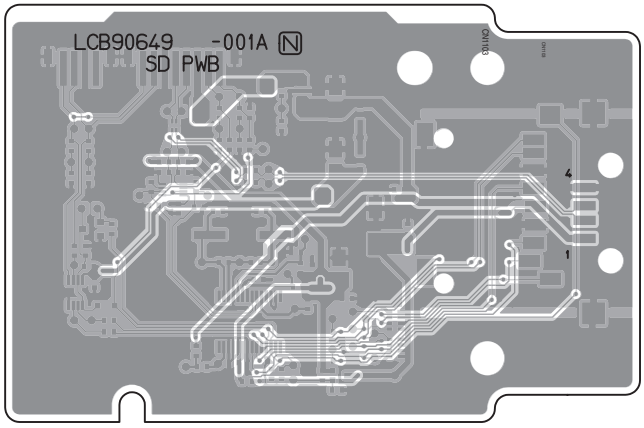

SD CARD PWB PATTERN [PARTS SIDE]

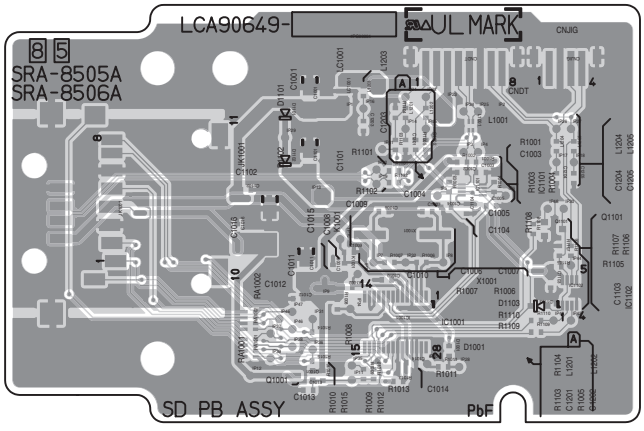

FRONT

VOLTAGE CHARTS

<TUNER PWB>
[P.2-7 - P.2-8]

MODE PIN NO.	DC (V)
Q004	
E	8.7
C	0
B	2.1
Q005	
E	0
C	9
B	8.7
TU001	
1	1.6
2	10.7
3	4.8
4	5
5	2
6	NC
7	4.8
8	4.8
9	30.6
10	NC
11	NC
12	NC
13	4.8
14	1.6
15	0
16	2.1
17	1.6
18	2.4
19	2.2
20	0
21	NC

[P.2-9 - P.2-10]

MODE PIN NO.	DC (V)
IC061	
1	NC
2	4
3	NC
4	NC
5	4.9
6	4.9
7	0
8	3.9
9	3.9
10	4
11	3.8
12	3.2
13	4
14	1.2
15	1.3
16	NC
17	0
18	3.2
19	8.9
20	NC
21	4
22	4
23	4
24	3.8
25	4
26	3.9
27	4
28	1.9
29	4
30	4
31	1.8
32	4
33	4
34	4
35	4
36	4
37	4
38	4
39	3.9
40	3.9
41	1.1
42	4
43	4
44	4
45	NC
46	4
47	4
48	4

<ANALOG PWB>
[P.2-11 - P.2-12]

MODE PIN NO.	DC (V)
IC101	
1	4.5
2	4.5
3	0
4	4.5
5	4.5
6	0
7	4.5
8	4.5
9	0
10	4.5
11	4.5
12	0
13	4.5
14	4.5
15	4.5
16	4.5
17	4.5
18	9
19	4.5
20	4.5
21	0
22	4.5
23	4.5
24	0
25	4.5
26	4.5
27	0
28	4.5
29	4.5
30	9
31	0
32	4.5
33	4.5
34	4.5
35	4.5
36	4.5
37	1.4
38	NC
39	1.4
40	NC
41	0
42	2.1
43	1.6
44	5
45	1.9
46	0
47	2
48	5
49	1.9
50	1.6
51	0.1
52	5
53	NC
54	4.9
55	2.5
56	2.1
57	2.5
58	2.1
59	2.1
60	2.5
61	5
62	2.5
63	0.2
64	2.1
65	NC
66	2.5
67	4.9
68	2.5
69	0.2
70	2.1
71	NC
72	2.5
73	4.9
74	2.5
75	0
76	0
77	2.1
78	1.4
79	2.8
80	5
81	2.3
82	0
83	2.8
84	0
85	2.5
86	4.6
87	2.5
88	2.2
89	2.1
90	0
91	2.5
92	2.8
93	2.5
94	0.2
95	2.1
96	NC

MODE PIN NO.	DC (V)
97	2.5
98	4.8
99	2.5
100	2.5
IC102	
1	0
2	2.4
3	2.5
4	2.4
5	2.4
6	2.5
7	2.5
8	2.4
9	0
10	2.4
11	2.2
12	2.4
13	0
14	0.3
15	0.3
16	0
17	2.4
18	0
19	2.4
20	0
21	2.4
22	0
23	0
24	0.1
25	5
26	0
27	4
28	3.9
29	0
30	NC
31	6.3
32	NC
33	0
34	1.2
35	0
36	3.4
37	4.1
38	3.4
39	1.7
40	6.4
41	1.8
42	2.9
43	1.8
44	0
45	1.3
46	2.8
47	2.5
48	2.5
49	3.9
50	6.4
51	4.9
52	NC
53	1.9
54	3
55	2.4
56	NC
57	2.5
58	NC
59	0
60	2.2
61	0
62	0
63	2.5
64	2.5
65	2.5
66	2.5
67	2.5
68	2.4
69	2.5
70	2.4
71	NC
72	2.4
73	NC
74	2.4
75	NC
76	0.6
77	0.1
78	2.4
79	NC
80	2.4
81	NC
82	2.4
83	0.3
84	0.6
85	0.5
86	2.4
87	5
88	2.4
89	2.8
90	2.4
91	0
92	NC

MODE PIN NO.	DC (V)
93	NC
94	2.4
95	0
96	2.4
97	0
98	2.4
99	0
100	NC
IC103	
1	2.1
2	2
3	9
4	2.2
5	0
6	9
IC104	
1	2.9
2	3
3	9
4	2.6
5	0
6	9
IC105	
1	2.1
2	0
3	9
4	2.2
5	0
6	9
IC281	
1	NC
2	NC
3	4.5
4	NC
5	4.5
6	NC
7	0
8	9
9	0
10	4.5
11	4.5
12	9
13	3
14	3
15	NC
16	NC
17	NC
18	NC
IC282	
1	3
2	0
3	3
4	0
5	9
6	0
7	3
8	3
Q106	
S	0.1
D	0.1
G	0
Q107	
S	3.2
D	5
G	3.3
Q108	
E	0.5
C	0
B	0
Q109	
E	2.6
C	0
B	1.9
Q110	
E	2.2
C	0
B	1.4
Q111	
E	2.2
C	0
B	1.4
Q112	
E	1.7
C	0
B	1
Q113	
E	0
C	5
B	2.9

[P.2-13 - P.2-14]

MODE PIN NO.	DC (V)
Q431	
E	0
C	0
B	2.4
Q432	
E	0
C	0
B	2.4
Q433	
E	2.4
C	2.5
B	0
Q451	
E	0
C	0
B	2.4
Q452	
E	0
C	0
B	2.4
Q453	
E	2.4
C	2.5
B	0

[P.2-15 - P.2-16]

MODE PIN NO.	DC (V)
IC301	
1	4.4
2	4.5
3	4.4
4	4.4
5	4.4
6	0
7	0
8	0
9	8.9
10	9
11	4.4
12	4.4
13	4.4
14	4.4
15	4.5
16	9
IC381	
1	NC
2	5
3	0.1
4	0
5	0.1
6	0.1
7	0
8	0
9	0.2
10	0.2
11	0.2
12	0.9
13	0.2
14	0.9
15	5
16	4.9
Q301	
E	0
C	8.9
B	0
Q302	
E	0
C	8.9
B	0

[P.2-17 - P.2-18]

MODE PIN NO.	DC (V)
IC501	
1	4.5
2	4.5
3	4.4
4	0
5	4.4
6	4.5
7	4.5
8	9
IC502	
1	1.5
2	1.5
3	1.6
4	0
5	3.2
6	3.2
7	0
8	1.6
9	1.6
10	0
11	1.5

MODE PIN NO.	DC (V)
12	1.6
13	3.2
14	3.2
15	1.6
16	1.6
IC551	
1	1.4
2	3.2
3	0
4	0
5	0
6	3.1
7	3.1
8	NC
9	3.2
10	0
11	1.6
12	1.6
13	1.6
14	0
15	0
16	0
17	0
18	0
19	0
20	NC
21	1.4
22	0
23	0
24	NC
25	NC
26	NC
27	NC
28	NC
29	NC
30	NC
31	NC
32	NC
33	NC
34	NC
35	NC
36	NC
37	NC
38	NC
39	NC
40	1.4
41	0
42	3.2
43	NC
44	NC
45	NC
46	NC
47	NC
48	NC
49	NC
50	NC
51	NC
52	NC
53	NC
54	0
55	1.4
56	1.5
57	1.4
58	0.7
59	0.6
60	0
61	0
62	3.2
63	0
64	0.6
IC552	
1	5
2	0
3	1.2
4	1.5
5	3.3
Q501	
E	3.8
C	9
B	4.4
Q502	
E	3.7
C	9
B	4.4
Q503	
E	0
C	3.2
B	0
Q553	
E	0
C	3.3
B	0

[P.2-19- P.2-20]

MODE PIN NO.	DC (V)
IC601	
1	6
2	6.1
3	6.1
4	6.1
5	6.1
6	6.1
7	0.7
8	6.1
9	6.1
10	6.1
11	1.1
12	0
13	1
14	6.1
15	0
16	5.2
17	0.1
18	5
19	0
20	12.1
21	5.9
22	0
23	0
24	4.9
25	3.9
26	4.7
27	4.7
28	6.1
29	6.1
30	6.1
31	6.1
32	6.1
33	6.1
34	0
35	0
36	6.1
37	6.1
38	0
39	6.1
40	6.1
41	6.1
42	6.1
43	6.1
44	6
45	6
46	6
47	6.1
48	6.1
IC602	
1	14.4
2	2.8
3	12.1
4	2.6
5	0
IC603	
1	5.9
2	4.7
3	4.8
4	0
5	6
6	6.1
7	8
8	11.7
IC604	
1	0
2	1.2
3	1.2
4	0
5	3.3
6	3.3
7	0
8	3.3
9	1.4
10	1.4
11	3.3
12	0
13	1.6
14	1.6
15	1.2
16	1.2
IC605	
1	-15.4
2	-15.4
3	-15.4
4	-15.4
5	14.4
6	10.3
7	1.6
8	-15.4
9	-15.4
10	-15.4
11	1.5
12	10.2
13	14.4
14	-14.4
15	-13.7

MODE PIN NO.	DC (V)
16	-15.1
17	-15.3
IC606	
1	NC
2	5
3	0.1
4	5
5	4.9
6	0
7	0
8	0
9	4.8
10	4.9
11	0
12	5
13	5
14	0
15	0
16	5
IC607	
1	-15.3
2	0
3	0
4	-15.4
5	0
6	0.1
7	-15.3
8	13.6
IC608	
1	5
2	0
3	5
4	NC
5	3.2
IC610	
1	6.2
2	6.1
3	6.1
4	0
5	6.1
6	6.1
7	6.2
8	12.2
Q603	
E	0
C	0
B	0.6
Q604	
E	0
C	12.1
B	8
Q605	
E	0
C	0
B	4.4
Q606	
E	0
C	14.3
B	0
Q607	
E	-14.4
C	-14.3
B	-14.3
Q614	
E	11.5
C	0
B	11.9
Q615	
E	0.7
C	0.6
B	0.1
Q616	
E	0
C	0
B	0.6
Q617	
E	0
C	0
B	0.6

[P.2-21 - P.2-22]

MODE PIN NO.	DC (V)
IC902	
1	4.9
2	0
3	3.3
Q901	
E	9
C	9
B	9.7
Q902	
E	5
C	5
B	5.7

<DIGITAL PWB>
[P.2-23 - P.2-24]

MODE PIN NO.	DC (V)
Q7501	
E	0
C	1
B	2.1

[P.2-29 - P.2-30]

MODE PIN NO.	DC (V)
IC6250	
1	0
2	5.4
3	1.6
4	0
5	0
6	0
7	0
8	0
9	5.3
10	0.7
11	0
12	3.5
13	0
14	0
15	0
16	5.3
17	0
18	0
19	0
20	2.2
21	0
22	0
23	5.3
24	5.3
IC6251	
1	1.6
2	0
3	NC
4	5
5	3.3
Q6201	
E	0.5
C	0
B	0.5
Q6202	
E	3.3
C	0
B	2.6
Q6203	
E	0.5
C	0
B	0.5
Q6204	
E	2.9
C	0
B	2.2
Q6205	
E	2.9
C	0
B	2.2
Q6206	
E	3.3
C	0
B	2.6
Q6207	
E	1.3
C	5
B	2
Q6208	
E	1.3
C	5
B	2.1
Q6209	
E	1.4
C	5
B	2.1
Q6210	
E	1.3
C	5
B	2.1
Q6211	
E	0.8
C	5
B	1.5
Q6212	
E	0
C	5
B	0.07
Q6213	
E	0
C	5
B	0.7
Q6214	
E	1.5
C	5
B	2.2
Q6250	

MODE PIN NO.	DC (V)
E	1.5
C	5
B	2
Q6251	
E	2.2
C	5
B	2

[P.2-31 - P.2-32]

MODE PIN NO.	DC (V)
IC6002	
1	1.5
2	1.5
3	0
4	2.4
5	3.2
IC6003	
1	0.7
2	0
3	0
4	0
5	3.2
6	0.7
7	3.2
8	3.1
IC6004	
1	0
2	NC
3	0
4	0
5	3.2
6	0
7	0
8	0
IC6724	
1	0
2	3.3
3	0
4	3.3

[P.2-35- P.2-36]

MODE PIN NO.	DC (V)
IC6101	
1	1.2
2	2.4
3	0
4	1.2
5	0
6	1.2
7	1.2
8	2.4
9	1.2
10	1.2
11	0
12	1.2
13	1.2
14	0
15	2.4
16	0
17	1.2
18	1.2
19	0
20	0
21	1.2
22	1.2
23	0.6
24	0.6
25	1.7
26	1.7
27	1.8
28	0
29	0.7
30	0.7
31	0.6
32	0.6
33	0.7
34	0.7
35	2.4
36	0
37	0
38	NC
39	NC
40	NC
41	NC
42	NC
43	NC
44	NC
45	0.6
46	0
47	0.7
48	0.7
49	0.7
50	0.7

MODE PIN NO.	DC (V)
51	0.6
52	0
53	1.8
54	1.3
55	1.3
56	0.6
57	0.6
58	1.2
59	0
60	1.2
61	0
62	0
63	1.2
64	1.2
65	2.5
66	0
67	2.4
68	1.2
69	1.2
70	0
71	1.2
72	1.2
73	2.4
74	1.2
75	1.2
76	0
77	1.2
78	1.2
79	0
80	1.2
81	1.2
82	0
83	1.2
84	1.2
85	0
86	2.4
87	NC
88	NC
89	NC
90	NC
91	NC
92	0
93	NC
94	1.2
95	2.4
96	2.4
97	1.2
98	1.2
99	0
100	1.2
IC6102	
1	0
2	2.6
3	1.3
4	1.3
5	2.6
6	2.6
7	2.6
8	2.6

[P.2-37 - P.2-38]

MODE PIN NO.	DC (V)
IC7201	
1	0.1
2	0.2
3	0.2
4	0.2
5	0.2
6	0.1
7	0.3
8	0.2
9	0
10	0
11	3.2
12	3.3
13	0
14	0
15	0
16	0
17	0.1
18	0.2
19	0.2
20	0.2
21	0.2
22	0.2
23	0.2
24	0.2
25	0.2
26	3.3
27	0
28	3.3
29	0.2
30	0.2
31	0.2
32	0.2

MODE PIN NO.	DC (V)
33	0.2
34	0.2
35	0.2
36	0.2
37	3.2
38	0.1
39	0.2
40	0.2
41	0.1
42	0.2
43	0.2
44	0.2
45	0.1
46	0
47	3.3
48	0.2
IC7203	
1	3.2
2	0
3	0.3
4	0
5	0.4
6	0
7	3.3
8	0.2
9	0.4
10	0
11	0.3
12	0
13	3.2
14	2.7
15	3.2
16	3
17	3.2
18	2.6
19	0
20	0.1
21	0.3
22	0.3
23	0.3
24	0.3
25	3.2
26	0
27	0.3
28	0.3
29	0.3
30	0.3
31	0.4
32	0.4
33	NC
34	3.2
35	3
36	2.7
37	NC
38	3.2
39	0.4
40	0.4
41	0
42	0.4
43	0.2
44	3.3
45	0.3
46	0.2
47	0
48	0.3
49	0.2
50	0
IC7204	
1	0
2	3.3
3	0
4	3.3
IC7206	
1	NC
2	3.3
3	0
4	3.3
5	3.3

: (V)
0.2
0.2
0.2
0.2
3.2
0.1
0.2
0.2
0.2
0.1
0
3.3
0.2
3.2
0
0.3
0
0.4
0
3.3
0.2
0.4
0
0.3
0
3.2
2.7
3.2
3
3.2
2.6
0
0.1
0.3
0.3
0.3
0.3
3.2
0
0.3
0.3
0.3
0.3
0.4
0.4
NC
3.2
3
2.7
NC
3.2
0.4
0.4
0
0.4
0.2
3.3
0.3
0.2
0
0.3
0.2
0
0
3.3
0
3.3
NC
3.3
0
3.3
3.3

[P.2-39 - P.2-40]

MODE PIN NO.	DC (V)
IC7033	
1	0
2	3.2
3	3.2
4	3.2
5	3.2
6	3.2
7	3.2
8	0
9	0
10	3.2
11	0
12	3.2
13	3.2
14	3.3
15	0
16	3.2
IC7036	
1	3.3
2	0
3	0
4	0
5	3.3
6	0
Q7030	
E	0
C	0
B	0
Q7032	
E	3.3
C	3.3
B	0
Q7033	
E	3.2
C	3.2
B	0

[P.2-41 - P.2-42]

MODE PIN NO.	DC (V)
IC6501	
1	0
2	0
3	3.3
4	0
5	0
6	0
7	0.1
8	0.1
9	2.7
10	0
11	0
12	0
13	3.3
14	0
15	2.9
16	0
17	0
18	0
19	0
20	3.3
21	0
22	0
23	NC
24	0
25	0
26	0
27	0
28	0
29	NC
30	3.3
31	0
32	0
33	NC
34	0
35	3.3
36	0
37	0
38	1.3
39	1.3
40	1.3
41	1.3
42	0
43	3.3
44	1.3
45	1.3
46	1.3
47	1.3
48	0
49	3.3
50	1.3
51	1.3
52	1.3
53	1.3
54	0
55	3.3

MODE PIN NO.	DC (V)
56	1.3
57	1.3
58	1.3
59	1.3
60	0
61	3.3
62	1.3
63	1.3
64	1.3
65	1.3
66	0
67	3.3
68	1.3
69	1.3
70	1.3
71	1.3
72	0
73	0
74	3.3
75	0
76	0
77	0
78	0.8
79	0.8
80	0.8
81	0.6
82	3.3
83	0
84	0.6
85	0.8
86	0.8
87	1.3
88	0
89	0
90	0.8
91	0.8
92	0.8
93	3.3
94	0
95	0.7
96	0.9
97	0.8
98	0.6
99	0
100	0
101	0.8
102	0.8
103	3.3
104	3.3
105	0
106	0.8
107	0.8
108	0.6
109	NC
110	1.1
111	1
112	0.9
113	3.3
114	0
115	0
116	0
117	0
118	0
119	0
120	0
121	0
122	0
123	0
124	0
125	3.3
126	0
127	0
128	0
129	0
130	0
131	0
132	0
133	0
134	0
135	0
136	0
137	3
138	0
139	0
140	0
141	0
142	0
143	0
144	0

[P.2-43 - P.2-44]

MODE PIN NO.	DC (V)
IC6011	
1	NC
2	0
3	0
4	0
5	0
6	0
7	0
8	0
9	0
10	0
11	0
12	0
13	0
14	0
15	0
16	0
17	3.3
18	0
19	0
20	0
21	0
22	0
23	0
24	0
25	0
26	0
27	0
28	0
29	1.3
30	0.8
31	0.8
32	0.8
33	0.8
34	0.8
35	0.8
36	2.5
37	1.7
38	0
39	1.1
40	0
41	1.1
42	1.1
43	1.1
44	0.7
45	0
46	0
47	0.6
48	0
49	0
50	0.7
51	0
52	0
53	0
54	0
55	3.3
IC6012	
1	3.3
2	0.1
3	0.1
4	0
5	0
6	3.3
7	3.3
8	3.3
IC6013	
1	3.3
2	0.1
3	1.7
4	0
5	3.4
6	NC
7	3.3
8	3.3

[P.2-47 - P.2-48]

MODE PIN NO.	DC (V)
IC6901	
1	3
2	0
3	3.2
4	5
IC9001	
1	8.6
2	13.3
3	3.5
4	0
5	0.9
6	1.3
7	3.4
8	0.9
IC9101	
1	3.3
2	0
3	2.5
IC9201	
1	6.5
2	13.3
3	1.3
4	0
5	0.9
6	1.3
7	3.3
8	0.9
IC9301	
1	1.2
2	NC
3	0
4	0.3
5	3.2
6	NC
7	NC
8	3.2

[P.2-49 - P.2-50]

MODE PIN NO.	DC (V)
IC7601	
1	0
2	0
3	NC
4	NC
5	0
6	1
7	2.8
8	0
9	0
10	0
11	0
12	0
13	1.9
14	0
15	1.4
16	3.2
17	1.8
18	NC
19	0
20	3.2
21	0
22	0
23	NC
24	NC
25	NC
26	NC
27	NC
28	NC
29	4.9
30	3.2
31	0
32	0
33	0
34	0
35	0
36	3.2
37	0
38	0
39	NC
40	NC
41	3.2
42	NC
43	NC
44	NC
45	NC
46	0
47	3.2
48	0
49	3.2
50	NC
51	NC
52	NC
53	NC
54	NC
55	NC

MODE PIN NO.	DC (V)
56	NC
57	NC
58	NC
59	NC
60	NC
61	NC
62	3.9
63	NC
64	3.2
65	NC
66	NC
67	NC
68	NC
69	NC
70	NC
71	0
72	0
73	NC
74	NC
75	NC
76	NC
77	NC
78	NC
79	NC
80	0
81	0
82	3.2
83	NC
84	3.2
85	NC
86	3.2
87	3.2
88	3.2
89	0
90	0
91	0
92	NC
93	3.2
94	3.2
95	0
96	0.2
97	0
98	0
99	4.9
100	0
IC7602	
1	0
2	0
3	0
4	0
5	3.2
6	3.2
7	0
8	3.2
IC7603	
1	3.3
2	3.3
3	0
4	5
5	5
IC7604	
1	NC
2	0
3	0
4	3.2
5	3.2
IC7605	
1	5
2	0
3	NC
4	0
5	0
6	5
IC7606	
1	5
2	0
3	NC
4	0
5	0
6	5

<POWER PWB>
[P.2-71 - P.2-72]

MODE PIN NO.	DC (V)
IC9101	
1	7
2	0
3	5
IC9301	
1	17.9
2	0
3	15.2
Q9021	
E	0
C	0.1
B	0.7
Q9281	
E	1.3
C	0
B	2.3
Q9282	
E	0
C	3.7
B	0.2
Q9283	
E	0
C	3.8
B	0.2
Q9284	
E	0
C	0
B	2.5

[P.2-73 - P.2-74]

MODE PIN NO.	DC (V)
IC9501	
1	385
2	NC
3	0
4	15.7
5	0.1
6	1.1
7	0.8
PC9501	
1	11.1
2	10.1
3	13.6
4	1

[P.2-75 - P.2-76]

MODE PIN NO.	DC (V)
IC9701	
1	13.1
2	11.9
3	0
4	2.6
IC9721	
1	13.2
2	9.1
3	0
4	1.2
5	6.8
IC9741	
1	13.2
2	5.1
3	0
4	1.3
5	6.9
Q9821	
E	0
C	0
B	0.6
Q9831	
E	0
C	0
B	0.6
Q9851	
E	13.1
C	6
B	13.1
Q9852	
E	0
C	13.1
B	0
Q9853	
E	0
C	0
B	3.1
Q9861	
E	0
C	0
B	0.6

<FRONT LED PWB>
[P.2-77]

MODE PIN NO.	DC (V)
Q0901	
E	0.2
C	0.4
B	0.9
Q0902	
E	0
C	0
B	0.6
Q0904	
E	0
C	4.9
B	0
Q0905	
E	0
C	0.2
B	0.7
Q0906	
E	4.5
C	4.9
B	3.3
Q0907	
E	0
C	4.4
B	0

<TEMP PWB>
[P.2-78]

MODE PIN NO.	DC (V)
IC2001	
1	4.5
2	4.5
3	4
4	0
5	0
6	0
7	0
8	4.9

<REMOCON PWB>
[P.2-80]

MODE PIN NO.	DC (V)
IC0821	
1	2.8
2	4.9
3	0

<SD CARD PWB>
[P.2-83 - P.2-84]

MODE PIN NO.	DC (V)
IC1001	
1	NC
2	1.4
3	1.6
4	0
5	3.3
6	5
7	3.3
8	0
9	3
10	3.4
11	NC
12	0
13	0
14	NC
15	NC
16	3.3
17	3.3
18	3.3
19	0.7
20	1.7
21	0.7
22	0
23	3.3
24	0
25	0
26	0
27	0
28	NC
Q1001	
E	3.4
C	0.7
B	3.4

<IRIS PWB>
[P.2-85 - P.2-86]

MODE PIN NO.	DC (V)
IC5001	
1	4.6
2	3.9
3	0
4	0
5	0
6	3.9
7	3.2
8	7.9
IC5002	
1	3.9
2	4
3	0
4	0
5	2.8
6	2.8
7	3.5
8	7.9
IC5003	
1	0
2	0
3	0
4	0
5	0
IC5005	
1	3.9
2	0
3	0
4	0
5	5.1
6	0
7	0
8	0
9	4.9
10	4.9
11	2.4
12	0
13	3.2
14	5.1
15	4.1
16	5.1
Q5001	
E	3.4
C	2.8
B	2.8

WAVEFORMS

TUNER PWB(1/2)

TU001-18

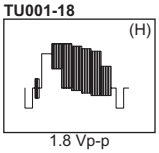

1.8 Vp-p

ANALOG PWB(1/6)

IC101-45

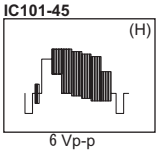

6 Vp-p

IC101-49

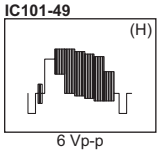

6 Vp-p

IC101-57

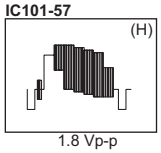

1.8 Vp-p

IC101-79

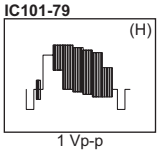

1 Vp-p

IC102-2

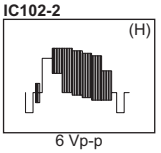

6 Vp-p

IC102-28

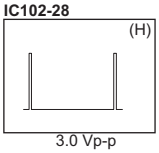

3.0 Vp-p

IC102-37

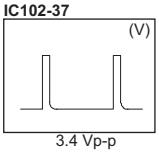

3.4 Vp-p

IC102-38

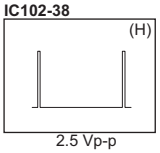

2.5 Vp-p

IC102-41

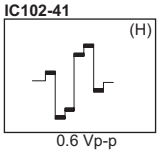

0.6 Vp-p

IC102-43

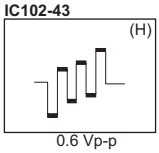

0.6 Vp-p

IC102-45

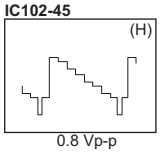

0.8 Vp-p

DIGITAL PWB(10/15)

IC6501-7

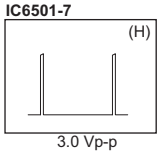

3.0 Vp-p

IC6501-8

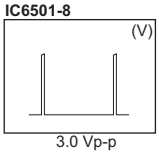

3.0 Vp-p

DIGITAL PWB(14/15)

IC7601-13

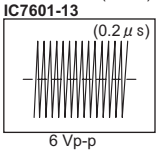

6 Vp-p

IC7601-15

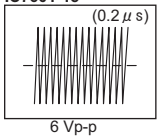

6 Vp-p

IC7601-62

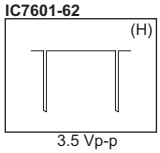

3.5 Vp-p

IC7601-64

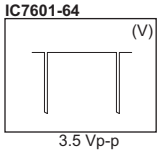

3.5 Vp-p

JVC
Victor Company of Japan, Limited
ILA Display Category 12, 3-chome, Moriya-cho, kanagawa-ku, Yokohama-city, kanagawa-prefecture, 221-8528, Japan

(No.YA409)

Printed in Japan
VPT

PARTS LIST

CAUTION

- The parts identified by the ⚠ symbol are important for the safety . Whenever replacing these parts, be sure to use specified ones to secure the safety.
- The parts not indicated in this Parts List and those which are filled with lines --- in the Parts No. columns will not be supplied.
- P.W. BOARD Ass'y will not be supplied, but those which are filled with the Parts No. in the Parts No. columns will be supplied.

ABBREVIATIONS OF RESISTORS, CAPACITORS AND TOLERANCES

RESISTORS	
CR	Carbon Resistor
FR	Fusible Resistor
PR	Plate Resistor
VR	Variable Resistor
HV R	High Voltage Resistor
MF R	Metal Film Resistor
MG R	Metal Glazed Resistor
MP R	Metal Plate Resistor
OM R	Metal Oxide Film Resistor
CMF R	Coating Metal Film Resistor
UNF R	Non-Flammable Resistor
CH V R	Chip Variable Resistor
CH MG R	Chip Metal Glazed Resistor
COMP. R	Composition Resistor
LPTC R	Linear Positive Temperature Coefficient Resistor

CAPACITORS	
C CAP.	Ceramic Capacitor
E CAP.	Electrolytic Capacitor
M CAP.	Mylar Capacitor
CH CAP.	Chip Capacitor
HV CAP.	High Voltage Capacitor
MF CAP.	Metalized Film Capacitor
MM CAP.	Metalized Mylar Capacitor
MP CAP.	Metalized Polystyrol Capacitor
PP CAP.	Polypropylene Capacitor
PS CAP.	Polystyrol Capacitor
TF CAP.	Thin Film Capacitor
MPP CAP.	Metalized Polypropylene Capacitor
TAN. CAP.	Tantalum Capacitor
CH C CAP.	Chip Ceramic Capacitor
BP E CAP.	Bi-Polar Electrolytic Capacitor
CH AL E CAP.	Chip Aluminum Electrolytic Capacitor
CH AL BP CAP.	Chip Aluminum Bi-Polar Capacitor
CH TAN. E CAP.	Chip Tantalum Electrolytic Capacitor
CH AL BP E CAP.	Chip Tantalum Bi-Polar Electrolytic Capacitor

RESISTORS									
F	G	J	K	M	N	R	H	Z	P
±1%	±2%	±5%	±10%	±20%	±30%	+30% -10%	+50% -10%	+80% -20%	+100% -0%

CONTENTS

USING P.W. BOARD & REMOTE CONTROL UNIT 3-3
EXPLODED VIEW PARTS LIST -1 3-4
EXPLODED VIEW -1 3-5
EXPLODED VIEW PARTS LIST -2 3-6
EXPLODED VIEW -2 3-7
EXPLODED VIEW PARTS LIST -3 3-8
EXPLODED VIEW -3 3-9
EXPLODED VIEW PARTS LIST -4 3-10
EXPLODED VIEW -4 3-11

PRINTED WIRING BOARD PARTS LIST [HD-56FH97] 3-12
ANALOG P.W. BOARD ASS'Y (SRA-1015A-M2) 3-12
DRIVE P.W. BOARD ASS'Y (SRA-3004A-M2) 3-16
REMOCON P.W. BOARD ASS'Y (SRA-8011A-M2) 3-26
TEMP P.W. BOARD ASS'Y (SRA-8203A-M2) 3-26
IRIS P.W. BOARD ASS'Y (SRA-8303A-M2) 3-26
SD CARD P.W. BOARD ASS'Y (SRA-8505A-M2) 3-27
POWER P.W. BOARD ASS'Y (SRA-9014A-M2) 3-27
DIGITAL P.W. BOARD ASS'Y (SRA0D124A-M2) 3-28
SIDE CONTROL P.W. BOARD ASS'Y (SRA0L012A-M2) 3-33
FRONT LED P.W. BOARD ASS'Y (SRA0L113A-M2) 3-33
LAMP COVER P.W. BOARD ASS'Y (SRA0L211A-M2) 3-34
TUNER P.W. BOARD ASS'Y (SRA0R013A-M2) 3-34
ATSC TUNER MODULE P.W. BOARD ASS'Y (SSD-2111A-M2) 3-34

PRINTED WIRING BOARD PARTS LIST [HD-56FN97] 3-35
ANALOG P.W. BOARD ASS'Y (SRA-1016A-M2) 3-35
DRIVE P.W. BOARD ASS'Y (SRA-3004A-M2) 3-39
REMOCON P.W. BOARD ASS'Y (SRA-8011A-M2) 3-39
TEMP P.W. BOARD ASS'Y (SRA-8203A-M2) 3-39
IRIS P.W. BOARD ASS'Y (SRA-8303A-M2) 3-39
SD CARD P.W. BOARD ASS'Y (SRA-8505A-M2) 3-39
POWER P.W. BOARD ASS'Y (SRA-9014A-M2) 3-39
DIGITAL P.W. BOARD ASS'Y (SRA0D127A-M2) 3-40
SIDE CONTROL P.W. BOARD ASS'Y (SRA0L013A-M2) 3-44
FRONT LED P.W. BOARD ASS'Y (SRA0L113A-M2) 3-44
LAMP COVER P.W. BOARD ASS'Y (SRA0L211A-M2) 3-44
TUNER P.W. BOARD ASS'Y (SRA0R013A-M2) 3-44
ATSC TUNER MODULE P.W. BOARD ASS'Y (SSD-2111A-M2) 3-44

PRINTED WIRING BOARD PARTS LIST [HD-61FH97] 3-45
ANALOG P.W. BOARD ASS'Y (SRA-1015A-M2) 3-45
DRIVE P.W. BOARD ASS'Y (SRA-3004A-M2) 3-45
REMOCON P.W. BOARD ASS'Y (SRA-8011A-M2) 3-45
TEMP P.W. BOARD ASS'Y (SRA-8203A-M2) 3-45
IRIS P.W. BOARD ASS'Y (SRA-8303A-M2) 3-45
SD CARD P.W. BOARD ASS'Y (SRA-8505A-M2) 3-45
POWER P.W. BOARD ASS'Y (SRA-9014A-M2) 3-45
DIGITAL P.W. BOARD ASS'Y (SRA0D123A-M2) 3-45
SIDE CONTROL P.W. BOARD ASS'Y (SRA0L012A-M2) 3-50
FRONT LED P.W. BOARD ASS'Y (SRA0L113A-M2) 3-50
LAMP COVER P.W. BOARD ASS'Y (SRA0L211A-M2) 3-50
TUNER P.W. BOARD ASS'Y (SRA0R013A-M2) 3-50
ATSC TUNER MODULE P.W. BOARD ASS'Y (SSD-2111A-M2) 3-50

PRINTED WIRING BOARD PARTS LIST [HD-61FN97] 3-51
ANALOG P.W. BOARD ASS'Y (SRA-1016A-M2) 3-51
DRIVE P.W. BOARD ASS'Y (SRA-3004A-M2) 3-51
REMOCON P.W. BOARD ASS'Y (SRA-8011A-M2) 3-51
TEMP P.W. BOARD ASS'Y (SRA-8203A-M2) 3-51
IRIS P.W. BOARD ASS'Y (SRA-8303A-M2) 3-51
SD CARD P.W. BOARD ASS'Y (SRA-8505A-M2) 3-51
POWER P.W. BOARD ASS'Y (SRA-9014A-M2) 3-51
DIGITAL P.W. BOARD ASS'Y (SRA0D126A-M2) 3-51
SIDE CONTROL P.W. BOARD ASS'Y (SRA0L013A-M2) 3-55
FRONT LED P.W. BOARD ASS'Y (SRA0L113A-M2) 3-55
LAMP COVER P.W. BOARD ASS'Y (SRA0L211A-M2) 3-55
TUNER P.W. BOARD ASS'Y (SRA0R013A-M2) 3-55
ATSC TUNER MODULE P.W. BOARD ASS'Y (SSD-2111A-M2) 3-55
REMOTE CONTROL UNIT PARTS LIST (RM-C14G-1H) 3-56
PACKING 3-56
PACKING PARTS LIST 3-56

USING P.W. BOARD & REMOTE CONTROL UNIT

P.W.B ASS'Y name	P.W.B ASS'Y No.			
	HD-56FH97	HD-56FN97	HD-61FH97	HD-61FN97
ANALOG P.W.B	SRA-1015A-M2	SRA-1016A-M2	SRA-1015A-M2	SRA-1016A-M2
DRIVE P.W.B	SRA-3004A-M2	←	←	←
REMOCON P.W.B	SRA-8011A-M2	←	←	←
TEMP P.W.B	SRA-8203A-M2	←	←	←
IRIS P.W.B	SRA-8303A-M2	←	←	←
SD CARD P.W.B	SRA-8505A-M2	←	←	←
POWER P.W.B	SRA-9014A-M2	←	←	←
DIGITAL P.W.B	SRA0D124A-M2	SRA0D127A-M2	SRA0D123A-M2	SRA0D126A-M2
SIDE CONTROL P.W.B	SRA0L012A-M2	SRA0L013A-M2	SRA0L012A-M2	SRA0L013A-M2
FRONT LED P.W.B	SRA0L113A-M2	←	←	←
LAMP COVER P.W.B	SRA0L211A-M2	←	←	←
TUNER P.W.B	SRA0R013A-M2	←	←	←
ATSC TUNER MODULE P.W.B	SSD-2111A-M2	←	←	←
REMOTE CONTROL UNIT	RM-C14G-1H	←	←	←

EXPLODED VIEW PARTS LIST -1

⚠	Ref.No.	Part No.	Part Name	Description	Local
	1	LC12698-001B-A	SPEAKER GRILL		HD-56FH97,HD-56FN97
	1	LC12746-001B-A	SPEAKER GRILL		HD-61FH97,HD-61FN97
	2	QYSBSFG4016MA	TAP SCREW	M4 x 16mm(x4)	
	3	LC12695-001B-A	FRONT PANEL		HD-56FH97
	3	LC12695-002B-A	FRONT PANEL		HD-56FN97
	3	LC12745-001C-A	FRONT PANEL		HD-61FH97
	3	LC12745-002C-A	FRONT PANEL		HD-61FN97
	4	QAS0437-001	SPEAKER	SP01/SP02(x2)	
	5	QYSBSFG4016MA	TAP SCREW	M4 x 16mm(x8)	
	6	WJJ0487-002A-E	E-SI C WIRE C-C	for SPEAKER RIGHT	
	7	WJJ0487-001A-E	E-SI C WIRE C-C	for SPEAKER LEFT	
	8	WJJ0486-001A-E	E-SI C WIRE C-C	FRONT LED CN9F - ANALOG	
	9	LC33535-001A-C	JVC MARK		
	10	LC33460-001A	ORNAMENT PLATE		
	11	LC22099-001B-A	POWER KNOB		
	12	LC22100-001B-A	KNOB BASE		
	13	LC12727-001A-A	CENTER COVER		
	14	QYSBSFG4016MA	TAP SCREW	M4 x 16mm(x10)	
⚠	15	56ILASC08AM2	SCREEN ASSY		HD-56FH97,HD-56FN97
⚠	15	61SC-008A-M2	SCREEN ASSY		HD-61FH97,HD-61FN97
	16	LC12717-001A-A	SCREEN HOLDER	TOP	HD-56FH97,HD-56FN97
	16	LC12751-001A-A	SCREEN HOLDER	TOP	HD-61FH97,HD-61FN97
	17	LC12718-001A-A	SCREEN HOLDER	BOTTOM	HD-56FH97,HD-56FN97
	17	LC12752-001A-A	SCREEN HOLDER	BOTTOM	HD-61FH97,HD-61FN97
	18	LC12716-001A-A	SCREEN HOLDER	LEFT/RIGHT(x2)	HD-56FH97,HD-56FN97
	18	LC12750-001A-A	SCREEN HOLDER	LEFT/RIGHT(x2)	HD-61FH97,HD-61FN97
	19	LC21810-039A-A	SPACER	(x4)	HD-56FH97,HD-56FN97
	19	LC21810-041A-A	SPACER	(x4)	HD-61FH97,HD-61FN97
	20	LC21715-037A-A	SPONGE SPACER	(x2)	HD-56FH97,HD-56FN97
	21	LC21810-040A-A	SPACER	(x4)	HD-61FH97,HD-61FN97
	22	LC21810-043A-A	SPACER	(x4)	
⚠	201	SRA0L113A-M2	FRONT LED PWB		

EXPLODED VIEW -1

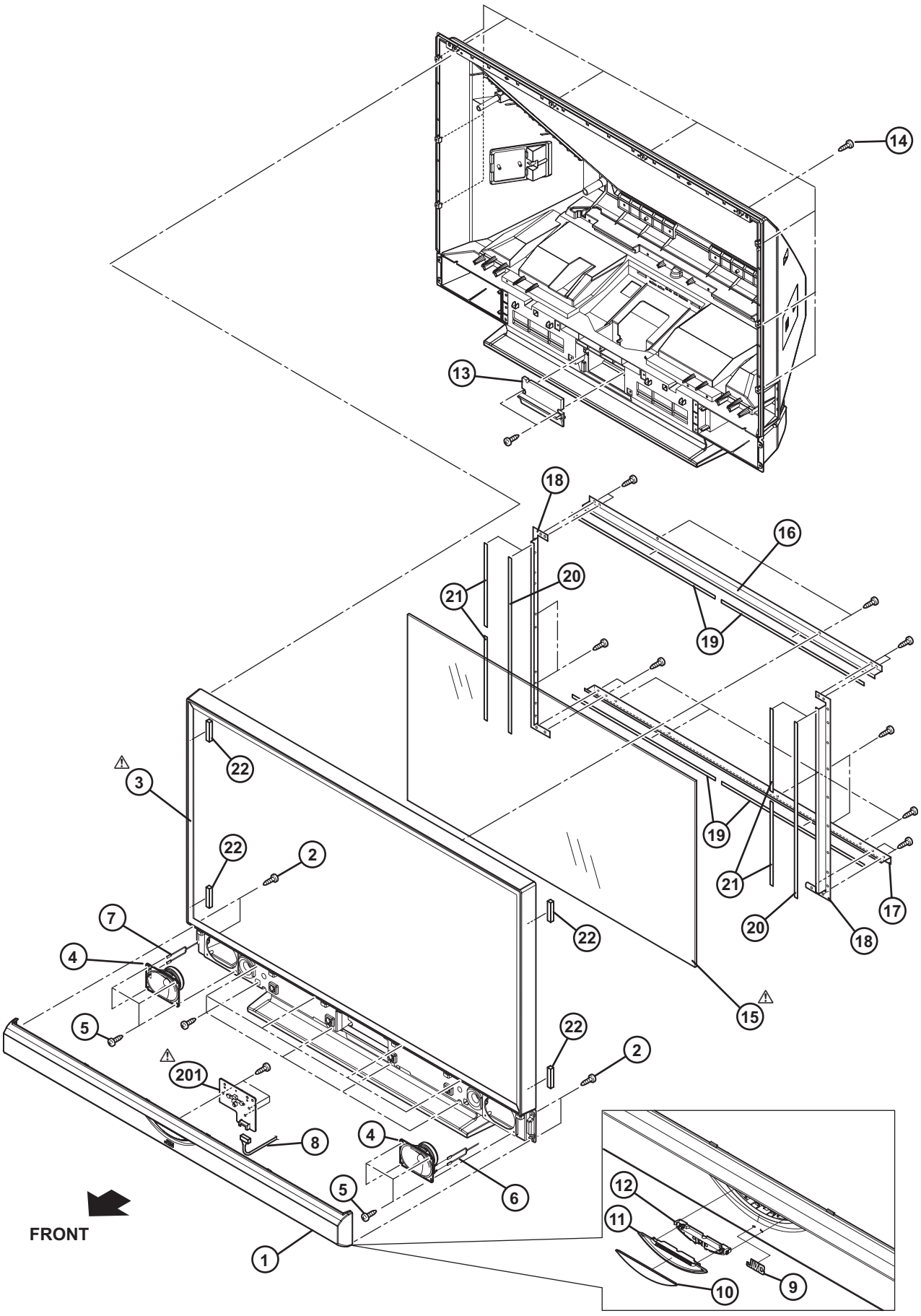

EXPLODED VIEW PARTS LIST -2

⚠	Ref.No.	Part No.	Part Name	Description	Local
⚠	31	LC12696-001A-A	BACK COVER		HD-56FH97,HD-56FN97
⚠	31	LC12743-001B-A	BACK COVER		HD-61FH97,HD-61FN97
	32	LC21888-001B-A	FILTER COVER	(x2)	
	33	LC33541-001A-A	FILTER	(x2)	
	34	QYSBSFG4016MA	TAP SCREW	M4 x 16mm(x2)	
	35	LC12713-001A-A	MIRROR HOLDER	TOP	HD-56FH97,HD-56FN97
	35	LC12747-001A-A	MIRROR HOLDER	TOP	HD-61FH97,HD-61FN97
	36	LC33598-007A-A	STICK SHEET	(x2)	HD-56FH97,HD-56FN97
	36	LC33598-009A-A	STICK SHEET	(x2)	HD-61FH97,HD-61FN97
	37	LC33598-006A-A	STICK SHEET	(x2)	
	38	LC12715-001A-A	MIRROR HOLDER	LEFT/RIGHT(x2)	
	39	LC33507-002A	GLASS MIRROR		HD-56FH97,HD-56FN97
	39	LC33507-003A	GLASS MIRROR		HD-61FH97,HD-61FN97
	40	LC33598-008A-A	STICK SHEET		HD-56FH97,HD-56FN97
	40	LC33598-010A-A	STICK SHEET		HD-61FH97,HD-61FN97
	41	LC12714-001A-A	MIRROR HOLDER	BOTTOM(x2)	
⚠	42	LC12697-001A-A	BODY		
	43	LC22229-001A	SUPPORT PLATE	(x2)	HD-56FH97,HD-56FN97
	43	LC22230-001A	SUPPORT PLATE	(x2)	HD-61FH97,HD-61FN97
	44	LC33580-001A-0K	SUPPORT BRACKET	(x2)	
	45	WJZ0221-001A-E	E-HARNESS ASSY	S CONTROL CN08S1/CN08S2 - ANALOG	
	46	LC33463-001A-A	SIDE CONTROL SHEET		
	47	LC22101-001B-A	SIDE CONTROL BASE		
	48	LC22201-001A-A	SHADE COVER		
⚠	202	SRA0L012A-M2	SIDE CONTROL PWB		HD-56FH97,HD-61FH97
⚠	202	SRA0L013A-M2	SIDE CONTROL PWB		HD-56FN97,HD-61FN97

EXPLODED VIEW -2

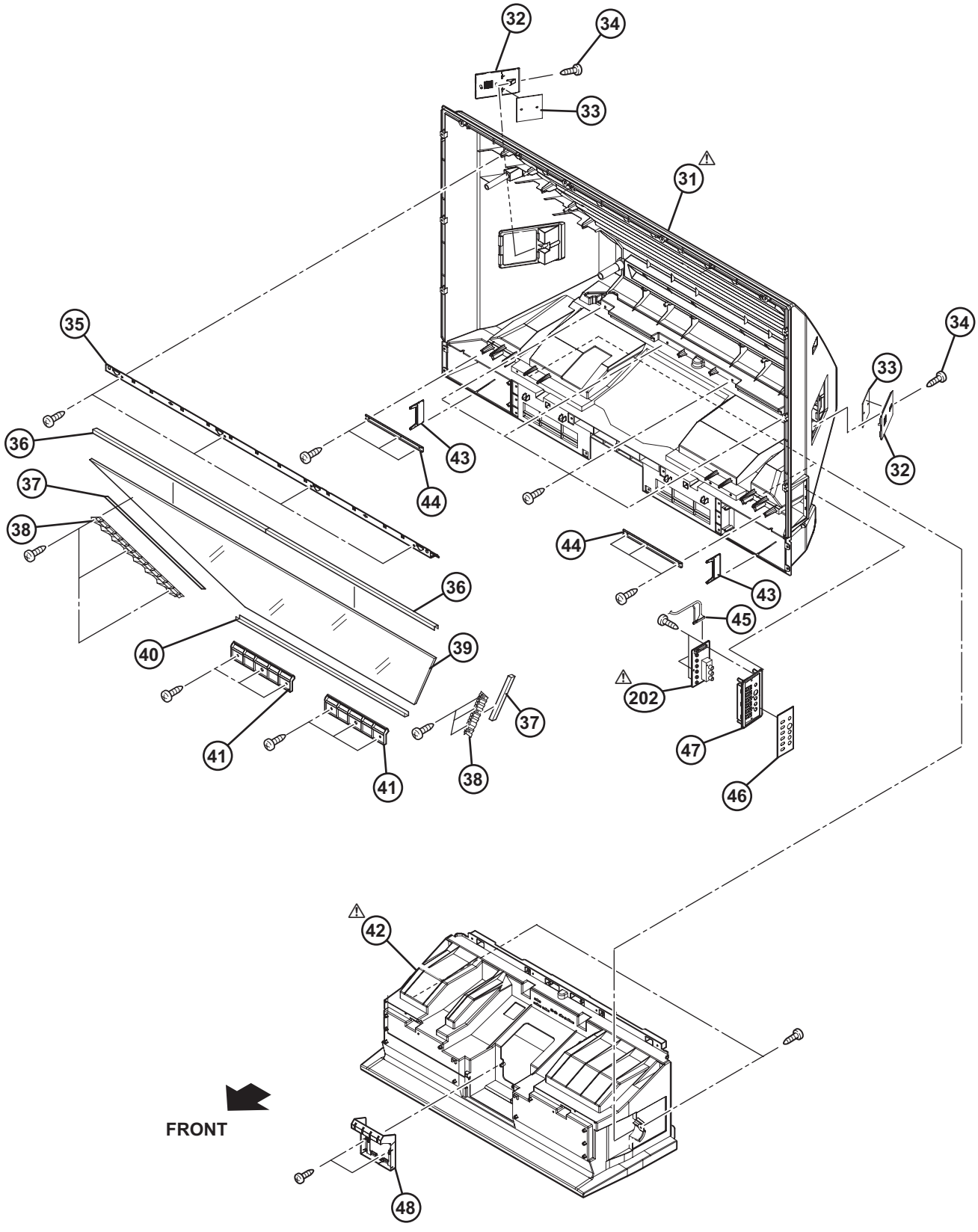

EXPLODED VIEW PARTS LIST -3

⚠	Ref.No.	Part No.	Part Name	Description	Local
	71	QYSBSFG4016MA	TAP SCREW	M4 x 16mm(x9)	
	72	QYSBSG4012ZA	TAP SCREW	M4 x 12mm(x5)	
	73	LC12259-001C-A	BODY COVER		
	74	LC22152-001A-A	AV TERMINAL BOARD		HD-56FH97,HD-61FH97
	74	LC22152-002A-A	AV TERMINAL BOARD		HD-56FN97,HD-61FN97
	75	QYSBSG3008ZA	TAP SCREW	M3 x 8mm(x3)	
	76	QYSBSG4008ZA	TAP SCREW	M4 x 8mm(x3)	
	77	QYSBSF3012MA	TAP SCREW	M3 x 12mm(x8)	
	78	QNB0036-001	CONNECTOR ACCESSORY	(x2)	
	79	QNB0036-001	CONNECTOR ACCESSORY	(x2)	
	80	CM46798-001	WASHER		
	81	LC42119-001A	NUT		
⚠	82	QMPD290-200-JC	POWER CORD(US/CA)	2m BLACK	
⚠	83	LC20106-001D-A	POWER CORD CLAMP		
	84	QQR0918-001	CORE FILTER		
	85	LC21690-002A-A	LAMP DUCT BKT		
	86	LC33073-001A-A	SD CARD BRACKET		
	87	WJJ0655-001A-E	E-SI C WIRE C-C	SD CARD CNDT - ATSC TUNER CN9701	
	88	QYSBSFG4016MA	TAP SCREW	M4 x 16mm(x2)	
	89	LC33208-001A-A	WARNING SHEET		
	90	LC42077-001A-A	ASSY SCREW		
⚠	91	LC12307-001C-A	LAMP COVER		
	92	LC42276-001A-A	INSERT NUT		
⚠	93	TS-CL110UAA	LAMP UNIT		
⚠	94	LC11943-001B-A	BODY BRACKET		
	95	QYSBSFG4016MA	TAP SCREW	M4 x 16mm(x4)	
	96	LC33206-001A-A	FOOT	(x4)	
	97	QUQK12-2514CH-E	FFC WIRE	TUNER CNT1 - ANALOG CN1T1	
	98	QJJ015-031213-E	SIN CR C-C WIRE	TUNER CNT2 - ANALOG CN1T2	
	99	QJJ015-099424-E	SIN CR C-C WIRE	POWER CN9008 - DD CNDD1	
	100	QQR0491-001	FERRITE CORE	(x5)	
	101	WJZ0222-001A-E	E-HARNESS ASSY	ANALOG CN1F/CN1S1/CN1S2 - FLONT LED/S CONTROL	
	102	QJJ015-122012-E	SIN CR C-C WIRE	ANALOG CN1A3 - POWER CN9A3	
	103	QJJ015-053010-E	SIN CR C-C WIRE	ANALOG CN1A2 - POWER CN9A2	
	104	QJJ061-062211-E	SIN CR C-C WIRE	ANALOG CN1A1 - POWER CN9A1	
	105	WJJ0485-003A-E	E-SI C WIRE C-C	ANALOG CN1SP - SPEAKER L/R	
	106	QQR0490-001	NOISE FILTER		
⚠	107	QAR0404-002	COOLING FAN		
	108	QQR0490-001	NOISE FILTER	(x2)	
	109	QJJ015-036023-E	SIN CR C-C WIRE	POWER CN9DU - ATSC TUNER CN9601	
	110	QUQL05-4013AE-E	FFC WIRE	DIGITAL CN012 - ANALOG CN012	
	111	QUQL05-5013AE-E	FFC WIRE	DIGITAL CN011 - ANALOG CN011	
	112	WJW0051-001A-E	E-TWISTED ASSY	DIGITAL CN0LV1 - DD CNLV1	
	113	WJJ0656-001A-E	E-SI C WIRE C-C	DIGITAL CN1DC - POWER CN9DC	
⚠	203	SRA-9014A-M2	POWER PWB		
⚠	204	SRA0R013A-M2	TUNER PWB		
⚠	205	SRA-1015A-M2	ANALOG PWB		HD-56FH97,HD-61FH97
⚠	205	SRA-1016A-M2	ANALOG PWB		HD-56FN97,HD-61FN97
⚠	206	SSD-2111A-M2	ATSC TUNER MODULE PWB		
⚠	207	SRA0D124A-M2	DIGITAL PWB		HD-56FH97
⚠	207	SRA0D127A-M2	DIGITAL PWB		HD-56FN97
⚠	207	SRA0D123A-M2	DIGITAL PWB		HD-61FH97
⚠	207	SRA0D126A-M2	DIGITAL PWB		HD-61FN97
⚠	208	SRA-8505A-M2	SD CARD PWB		

EXPLODED VIEW -3

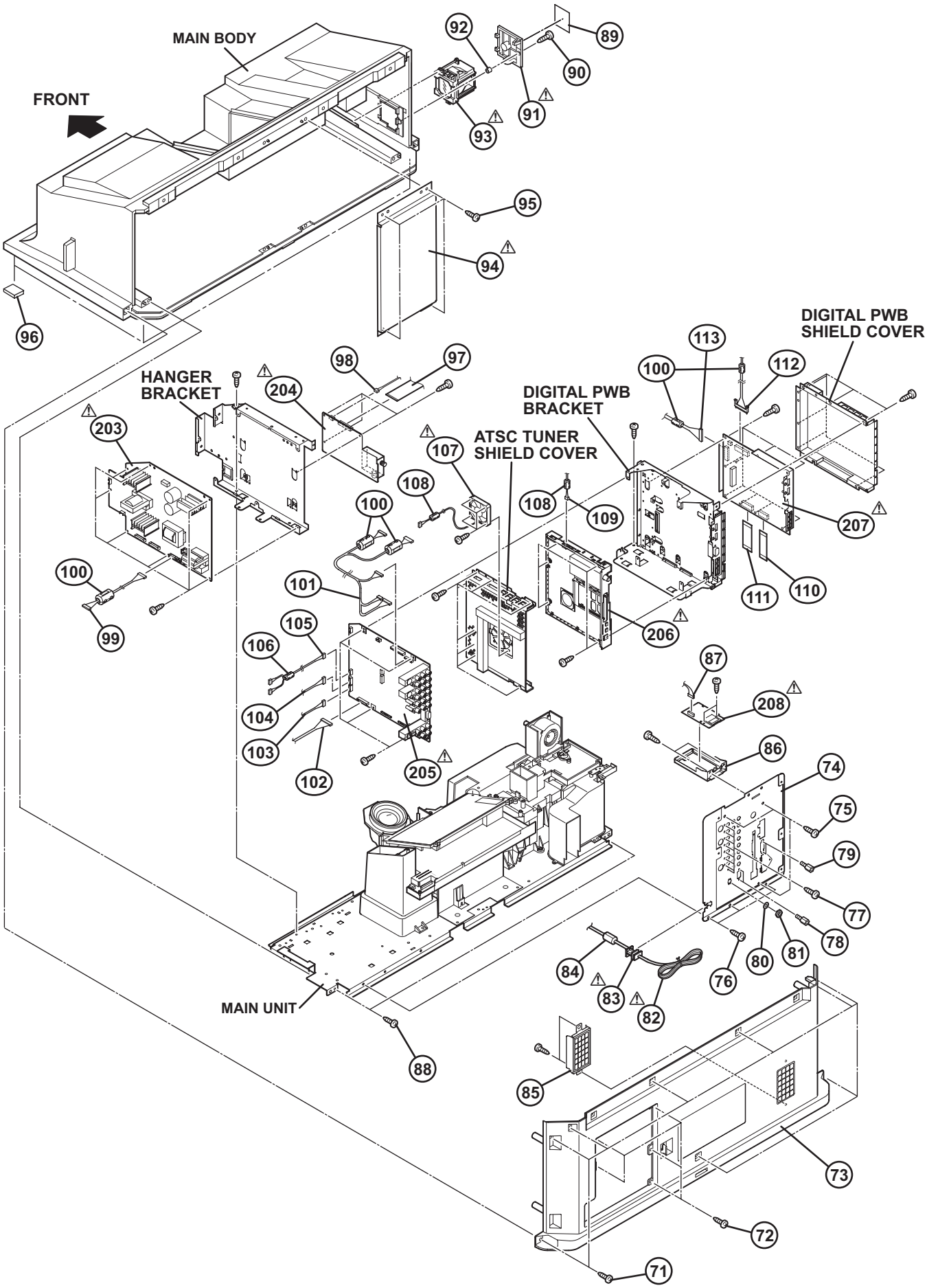

EXPLODED VIEW PARTS LIST -4

⚠	Ref.No.	Part No.	Part Name	Description	Local
	130	WJJ0708-001B-E	E-HARNESS ASSY	LAMP COVER SW CN0806 - DD CNSW1	
	131	QQR0490-001	NOISE FILTER	(x6)	
	132	LC12369-001C-A	UNIT BASE		
⚠	133	QAR0368-002	COOLING FAN		
	134	LC42034-001A-A	WELL NUT	(x2)	
	135	LC12355-001B-A	SIROCCO TOP CASE		
	136	QJJ015-041204-E	SIN CR C-C WIRE	THERMO CN82T - DD CNT1	
	137	LC12352-001B-A	HOLDER FAN		
⚠	138	QAR0367-001	COOLING FAN		
	139	QYSBSFG4035MA	TAP SCREW	M4 x 35mm(x2)	
⚠	140	QAR0354-002	COOLING FAN		
	141	QYSPSPD4040MA	SCREW	M4 x 40mm(x2)	
	142	LC42034-001A-A	WELL NUT	(x2)	
⚠	143	LC12225-001A-A	DUCT PCS		
⚠	144	QMR0014-001	THERMO PROTECTOR		
⚠	145	COP13A-SAA	OPTICAL/DRIVE ASSY		
	146	LC12777-002A	PJ LENS		
	147	QJJ015-034213-E	SIN CR C-C WIRE	REMOCON CN08RE - ANALOG CN1RE	
	148	LC12353-001C-A	BALLAST HOLDER		
⚠	149	QAL0883-001	POWER UNIT ASSY		
	150	WJJ0664-001A-E	E-SI C WIRE C-C		
	151	WJJ0652-003A-E	E-SI C WIRE C-C		
	152	QQR0491-001	FERRITE CORE	(x3)	
⚠	209	SRA0L211A-M2	LAMP COVER SW PWB		
⚠	210	SRA-3004A-M2	DRIVE PWB		
⚠	211	SRA-8303A-M2	IRIS PWB		
⚠	212	SRA-8011A-M2	REMOCON PWB		
⚠	213	SRA-8203A-M2	TEMP PWB		

EXPLODED VIEW -4

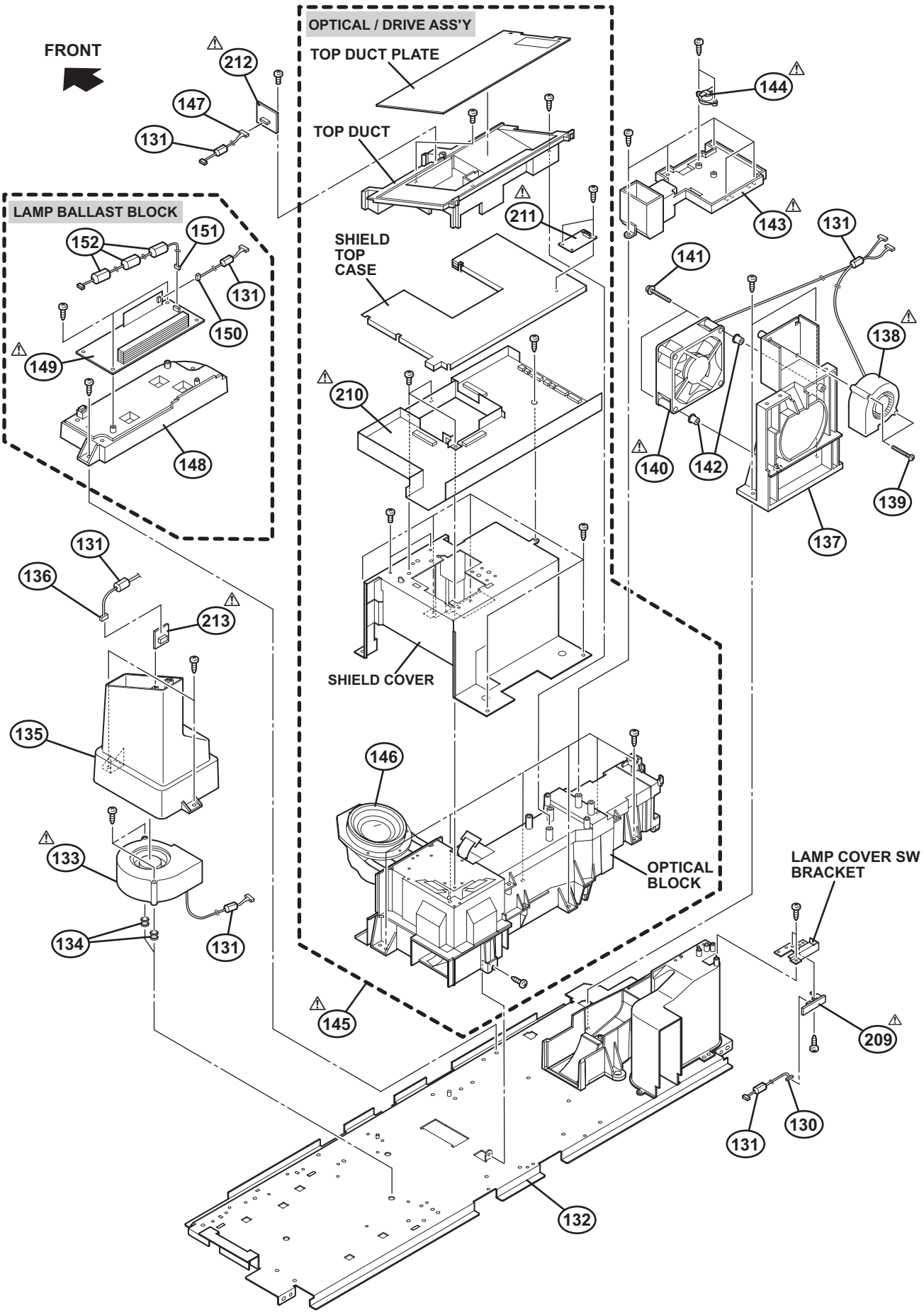

PRINTED WIRING BOARD PARTS LIST [HD-56FH97]

ANALOG P.W. BOARD ASS'Y (SRA-1015A-M2)

⚠Ref No.	Part No.	Part Name	Description	Local
IC101	R2S11004FT	IC		
IC102	R2S11003FT	IC		
IC103	MM1510XN-X	IC		
IC104	MM1510XN-X	IC		
IC105	MM1510XN-X	IC		
IC281	BD3869AF-X	IC		
IC282	RC4558D-X	IC		
IC301	CD4052BNS-X	IC		
IC501	HA17558AF-X	IC		
IC502	AK4554VT-X	IC		
IC551	JCC5067	IC		
IC552	PQ2L3152MS-X	IC		
IC601	NJW1182FP1	IC		
IC602	PQ20WZ11-X	IC		
IC604	MX3000CS-X	IC		
IC605	TDA8928ST/N1	IC		
IC606	M62320FP-X	IC		
IC607	LM393DR-X	IC		
IC608	MM3143DN-X	IC		
IC610	RC4558D-X	IC		
IC902	MM1663DT-X	IC		
Q106	SSM3K17FU-X	MOS FET		
Q107	SSM3K17FU-X	MOS FET		
Q108	2SC3928A/QR/-X	TRANSISTOR		
Q109	2SA1022/BC/-X	TRANSISTOR		
Q110	2SA1022/BC/-X	TRANSISTOR		
Q111	2SA1022/BC/-X	TRANSISTOR		
Q112	2SA1022/BC/-X	TRANSISTOR		
Q113	2SC3928A/QR/-X	TRANSISTOR		
Q302	UN2213-X	DIGI TRANSISTOR		
Q431	UN2226-X	DIGI TRANSISTOR		
Q432	UN2226-X	DIGI TRANSISTOR		
Q433	UN2110-X	DIGI TRANSISTOR		
Q451	UN2226-X	DIGI TRANSISTOR		
Q452	UN2226-X	DIGI TRANSISTOR		
Q453	UN2110-X	DIGI TRANSISTOR		
Q501	2SC3928A/QR/-X	TRANSISTOR		
Q502	2SC3928A/QR/-X	TRANSISTOR		
Q503	2SC3928A/QR/-X	TRANSISTOR		
Q553	2SC3928A/QR/-X	TRANSISTOR		
Q605	UN2212-X	DIGI TRANSISTOR		
Q606	UN2112-X	DIGI TRANSISTOR		
Q607	2SC3928A/QR/-X	TRANSISTOR		
Q614	2SA1530A/QR/-X	TRANSISTOR		
Q615	2SA1530A/QR/-X	TRANSISTOR		
Q616	2SC3928A/QR/-X	TRANSISTOR		
Q617	2SC3928A/QR/-X	TRANSISTOR		
Q901	2SC5881/QR/-X	POW TRANSISTOR		
Q902	2SC5881/QR/-X	POW TRANSISTOR		
D105	1SS355W-X	DIODE		
D110	1SS355W-X	DIODE		
D121	MA8056/M/-X	Z DIODE		
D122	MA8056/M/-X	Z DIODE		
D123	MA8056/M/-X	Z DIODE		
D124	MA8056/M/-X	Z DIODE		
D125	MA8056/M/-X	Z DIODE		
D126	MA8056/M/-X	Z DIODE		
D133	MA8100/M/-X	Z DIODE		
D134	MA8100/M/-X	Z DIODE		
D135	MA8100/M/-X	Z DIODE		
D401	UDZW10B-X	Z DIODE		
D402	UDZW10B-X	Z DIODE		
D403	UDZW10B-X	Z DIODE		
D404	UDZW10B-X	Z DIODE		
D405	UDZW10B-X	Z DIODE		
D406	UDZW10B-X	Z DIODE		
D407	UDZW10B-X	Z DIODE		
D408	UDZW10B-X	Z DIODE		
D409	UDZW10B-X	Z DIODE		
D410	UDZW10B-X	Z DIODE		
D411	UDZW10B-X	Z DIODE		
D412	UDZW10B-X	Z DIODE		
D413	UDZW10B-X	Z DIODE		
D414	UDZW10B-X	Z DIODE		
D415	UDZW10B-X	Z DIODE		
D416	UDZW10B-X	Z DIODE		
D417	UDZW10B-X	Z DIODE		
D418	UDZW10B-X	Z DIODE		
D419	UDZW10B-X	Z DIODE		
D420	UDZW10B-X	Z DIODE		
D421	UDZW10B-X	Z DIODE		
D422	UDZW10B-X	Z DIODE		
D423	UDZW10B-X	Z DIODE		
D424	UDZW10B-X	Z DIODE		
D431	UDZW10B-X	Z DIODE		
D432	UDZW10B-X	Z DIODE		
D451	UDZW10B-X	Z DIODE		
D452	UDZW10B-X	Z DIODE		
D461	UDZW10B-X	Z DIODE		
D462	UDZW10B-X	Z DIODE		
D463	UDZW10B-X	Z DIODE		
D465	UDZW10B-X	Z DIODE		
D466	UDZW10B-X	Z DIODE		
D491	UDZW3.3B-X	Z DIODE		
D492	S9648	PHOTO CONDUCTOR		
D501	1SS355W-X	DIODE		
D502	1SS355W-X	DIODE		
D601	1SS355W-X	DIODE		
D605	1SS355W-X	DIODE		
D606	1SS355W-X	DIODE		
D607	1SS355W-X	DIODE		
D608	1SS355W-X	DIODE		
D610	UDZW20B-X	Z DIODE		
D611	UDZW20B-X	Z DIODE		
D612	UDZW20B-X	Z DIODE		
D613	UDZW20B-X	Z DIODE		
D615	1SS355W-X	DIODE		
D616	UDZW3.3B-X	Z DIODE		
D618	1SS355W-X	DIODE		
D619	UDZW6.2B-X	Z DIODE		
D903	PTZ11B-X	Z DIODE		
D904	PTZ6.8B-X	Z DIODE		
C102	NCB11CK-225X	C CAPACITOR	2.2uF	16V K
C103	NCB11CK-225X	C CAPACITOR	2.2uF	16V K
C106	NEHL1EM-475X	E CAPACITOR	4.7uF	25V M
C107	NCB31CK-104X	C CAPACITOR	0.1uF	16V K
C108	NEHL1CM-476X	E CAPACITOR	47uF	16V M
C109	NCB31CK-104X	C CAPACITOR	0.1uF	16V K
C110	NCB31CK-104X	C CAPACITOR	0.1uF	16V K
C115	NCB31CK-104X	C CAPACITOR	0.1uF	16V K
C116	NCB31CK-104X	C CAPACITOR	0.1uF	16V K
C117	NCB31CK-104X	C CAPACITOR	0.1uF	16V K
C118	NCB31CK-105X	C CAPACITOR	1uF	16V K
C119	NCB31CK-105X	C CAPACITOR	1uF	16V K
C120	NCB31CK-105X	C CAPACITOR	1uF	16V K
C121	NCB31CK-105X	C CAPACITOR	1uF	16V K
C122	NCB31CK-104X	C CAPACITOR	0.1uF	16V K
C123	NCB31CK-104X	C CAPACITOR	0.1uF	16V K
C124	NCB31CK-105X	C CAPACITOR	1uF	16V K
C125	NCB31CK-105X	C CAPACITOR	1uF	16V K
C126	NCB31CK-105X	C CAPACITOR	1uF	16V K
C127	NCB31CK-105X	C CAPACITOR	1uF	16V K
C128	NCB31CK-104X	C CAPACITOR	0.1uF	16V K
C129	NCB31CK-104X	C CAPACITOR	0.1uF	16V K
C130	NEHL1CM-476X	E CAPACITOR	47uF	16V M
C131	NCB31CK-104X	C CAPACITOR	0.1uF	16V K
C132	NCB31CK-105X	C CAPACITOR	1uF	16V K
C133	NCB31CK-105X	C CAPACITOR	1uF	16V K
C134	NCB31CK-105X	C CAPACITOR	1uF	16V K
C136	NCB31CK-104X	C CAPACITOR	0.1uF	16V K
C138	NCB31CK-103X	C CAPACITOR	0.01uF	16V K
C139	NCB31CK-105X	C CAPACITOR	1uF	16V K
C141	NEHL1CM-106X	E CAPACITOR	10uF	16V M
C142	NCB31CK-104X	C CAPACITOR	0.1uF	16V K
C143	NCB31CK-104X	C CAPACITOR	0.1uF	16V K
C144	NCB31CK-105X	C CAPACITOR	1uF	16V K
C145	NEHL1CM-106X	E CAPACITOR	10uF	16V M
C146	NEHL1AM-107X	E CAPACITOR	100uF	10V M
C147	NEHL1CM-106X	E CAPACITOR	10uF	16V M
C148	NCB31CK-105X	C CAPACITOR	1uF	16V K
C149	NEHL1CM-106X	E CAPACITOR	10uF	16V M
C150	NEHL1AM-107X	E CAPACITOR	100uF	10V M
C151	NEHL1CM-106X	E CAPACITOR	10uF	16V M
C152	NCB31CK-105X	C CAPACITOR	1uF	16V K
C153	NEHL1CM-106X	E CAPACITOR	10uF	16V M
C154	NEHL1AM-107X	E CAPACITOR	100uF	10V M
C155	NEHL1CM-106X	E CAPACITOR	10uF	16V M
C156	NCB31CK-103X	C CAPACITOR	0.01uF	16V K
C157	NCB31CK-103X	C CAPACITOR	0.01uF	16V K
C158	NCB31CK-103X	C CAPACITOR	0.01uF	16V K
C159	NCB31HK-104X	C CAPACITOR	0.1uF	50V K
C160	NCB31HK-104X	C CAPACITOR	0.1uF	50V K
C161	NCB31CK-103X	C CAPACITOR	0.01uF	16V K
C162	NCB31HK-104X	C CAPACITOR	0.1uF	50V K
C163	NCB31CK-104X	C CAPACITOR	0.1uF	16V K
C164	NCB31CK-104X	C CAPACITOR	0.1uF	16V K
C165	NCB31CK-104X	C CAPACITOR	0.1uF	16V K
C166	NCB31HK-103X	C CAPACITOR	0.01uF	50V K
C167	NCB31CK-104X	C CAPACITOR	0.1uF	16V K

⚠Ref No.	Part No.	Part Name	Description Local
C168	NCB31CK-104X	C CAPACITOR	0.1uF 16V K
C169	NCB31CK-103X	C CAPACITOR	0.01uF 16V K
C170	NCB31CK-103X	C CAPACITOR	0.01uF 16V K
C171	NCB31CK-103X	C CAPACITOR	0.01uF 16V K
C172	NCB31CK-223X	C CAPACITOR	0.022uF 16V K
C173	NDC31HJ-680X	C CAPACITOR	68pF 50V J
C174	NDC31HJ-331X	C CAPACITOR	330pF 50V J
C175	NCB31CK-103X	C CAPACITOR	0.01uF 16V K
C176	NCB31CK-103X	C CAPACITOR	0.01uF 16V K
C177	NCB31CK-104X	C CAPACITOR	0.1uF 16V K
C178	NCB31CK-105X	C CAPACITOR	1uF 16V K
C179	NEHL1CM-476X	E CAPACITOR	47uF 16V M
C180	NCB31CK-104X	C CAPACITOR	0.1uF 16V K
C181	NCB31CK-103X	C CAPACITOR	0.01uF 16V K
C182	NCB31CK-103X	C CAPACITOR	0.01uF 16V K
C183	NCB31CK-103X	C CAPACITOR	0.01uF 16V K
C184	NCB31CK-104X	C CAPACITOR	0.1uF 16V K
C185	NCB31CK-104X	C CAPACITOR	0.1uF 16V K
C187	NCB31CK-104X	C CAPACITOR	0.1uF 16V K
C189	NEHL1CM-106X	E CAPACITOR	10uF 16V M
C191	NCB31CK-104X	C CAPACITOR	0.1uF 16V K
C192	NCB31CK-104X	C CAPACITOR	0.1uF 16V K
C193	NCB31CK-104X	C CAPACITOR	0.1uF 16V K
C199	NCB31CK-104X	C CAPACITOR	0.1uF 16V K
C200	NCB31CK-104X	C CAPACITOR	0.1uF 16V K
C201	NCB31CK-104X	C CAPACITOR	0.1uF 16V K
C202	NCB31CK-104X	C CAPACITOR	0.1uF 16V K
C203	NCB31CK-104X	C CAPACITOR	0.1uF 16V K
C207	NCB11CK-225X	C CAPACITOR	2.2uF 16V K
C208	NCB11CK-225X	C CAPACITOR	2.2uF 16V K
C211	NDC31HJ-221X	C CAPACITOR	220pF 50V J
C212	NDC31HJ-820X	C CAPACITOR	82pF 50V J
C215	NCB11AK-106X	C CAPACITOR	10uF 10V K
C221	NCB31HK-103X	C CAPACITOR	0.01uF 50V K
C222	NCB31HK-103X	C CAPACITOR	0.01uF 50V K
C223	NDC31HJ-101X	C CAPACITOR	100pF 50V J
C224	NDC31HJ-101X	C CAPACITOR	100pF 50V J
C225	NDC31HJ-100X	C CAPACITOR	10pF 50V J
C226	NDC31HJ-181X	C CAPACITOR	180pF 50V J
C227	NDC31HJ-101X	C CAPACITOR	100pF 50V J
C228	NDC31HJ-101X	C CAPACITOR	100pF 50V J
C229	NDC31HJ-100X	C CAPACITOR	10pF 50V J
C245	NCB31HK-104X	C CAPACITOR	0.1uF 50V K
C246	NCB31CK-104X	C CAPACITOR	0.1uF 16V K
C281	NENA1CM-475X	BP E CAPACITOR	4.7uF 16V M
C282	NENA1CM-475X	BP E CAPACITOR	4.7uF 16V M
C283	NEHL1EM-226X	E CAPACITOR	22uF 25V M
C284	NEHL1CM-107X	E CAPACITOR	100uF 16V M
C285	NEHL1CM-476X	E CAPACITOR	47uF 16V M
C286	NCB31CK-104X	C CAPACITOR	0.1uF 16V K
C287	NENA1CM-475X	BP E CAPACITOR	4.7uF 16V M
C288	NENA1CM-475X	BP E CAPACITOR	4.7uF 16V M
C291	NCB11AK-106X	C CAPACITOR	10uF 10V K
C301	NEHL1CM-476X	E CAPACITOR	47uF 16V M
C303	NENA1CM-475X	BP E CAPACITOR	4.7uF 16V M
C304	NENA1CM-475X	BP E CAPACITOR	4.7uF 16V M
C305	NEHL1CM-107X	E CAPACITOR	100uF 16V M
C306	NEHL1EM-475X	E CAPACITOR	4.7uF 25V M
C307	NEHL1EM-475X	E CAPACITOR	4.7uF 25V M
C401	NCB31HK-103X	C CAPACITOR	0.01uF 50V K
C402	NEHL1CM-106X	E CAPACITOR	10uF 16V M
C403	NEHL1CM-106X	E CAPACITOR	10uF 16V M
C404	NCB21AK-225X	C CAPACITOR	2.2uF 10V K
C405	NCB21AK-225X	C CAPACITOR	2.2uF 10V K
C406	NCB21AK-225X	C CAPACITOR	2.2uF 10V K
C407	NCB21AK-225X	C CAPACITOR	2.2uF 10V K
C408	NCB21AK-225X	C CAPACITOR	2.2uF 10V K
C409	NEHL1CM-106X	E CAPACITOR	10uF 16V M
C410	NCB21AK-225X	C CAPACITOR	2.2uF 10V K
C411	NCB21AK-225X	C CAPACITOR	2.2uF 10V K
C412	NCB21AK-225X	C CAPACITOR	2.2uF 10V K
C413	NCB21AK-225X	C CAPACITOR	2.2uF 10V K
C414	NCB21AK-225X	C CAPACITOR	2.2uF 10V K
C415	NCB31HK-103X	C CAPACITOR	0.01uF 50V K
C416	NEHL1CM-106X	E CAPACITOR	10uF 16V M
C417	NEHL1CM-106X	E CAPACITOR	10uF 16V M
C418	NCB21AK-225X	C CAPACITOR	2.2uF 10V K
C419	NCB21AK-225X	C CAPACITOR	2.2uF 10V K
C420	NCB31HK-102X	C CAPACITOR	1000pF 50V K
C421	NCB21AK-225X	C CAPACITOR	2.2uF 10V K
C422	NCB21AK-225X	C CAPACITOR	2.2uF 10V K
C423	NCB21AK-225X	C CAPACITOR	2.2uF 10V K
C431	NCB11CK-225X	C CAPACITOR	2.2uF 16V K
C432	NCB11CK-225X	C CAPACITOR	2.2uF 16V K
C433	NCB11CK-105X	C CAPACITOR	1uF 16V K
C451	NCB11CK-225X	C CAPACITOR	2.2uF 16V K
C452	NCB11CK-225X	C CAPACITOR	2.2uF 16V K
C453	NCB11CK-105X	C CAPACITOR	1uF 16V K
C461	NDC31HJ-101X	C CAPACITOR	100pF 50V J
C462	NDC31HJ-101X	C CAPACITOR	100pF 50V J
C463	NDC31HJ-101X	C CAPACITOR	100pF 50V J
C464	NCB21AK-225X	C CAPACITOR	2.2uF 10V K
C465	NCB21AK-225X	C CAPACITOR	2.2uF 10V K
C466	NCB21AK-225X	C CAPACITOR	2.2uF 10V K
C468	NDC31HJ-101X	C CAPACITOR	100pF 50V J
C469	NDC31HJ-101X	C CAPACITOR	100pF 50V J
C491	NEHL1CM-106X	E CAPACITOR	10uF 16V M
C492	NCB31CK-104X	C CAPACITOR	0.1uF 16V K
C493	NEHL1CM-107X	E CAPACITOR	100uF 16V M
C494	NCB31HK-102X	C CAPACITOR	1000pF 50V K
C501	NCB31CK-223X	C CAPACITOR	0.022uF 16V K
C502	NCB31CK-223X	C CAPACITOR	0.022uF 16V K
C503	NCB31HK-222X	C CAPACITOR	2200pF 50V K
C504	NCB31HK-222X	C CAPACITOR	2200pF 50V K
C505	NCB31HK-822X	C CAPACITOR	8200pF 50V K
C506	NCB31HK-822X	C CAPACITOR	8200pF 50V K
C507	NEHL1AM-107X	E CAPACITOR	100uF 10V M
C508	NENA1HM-105X	BP E CAPACITOR	1uF 50V M
C509	NENA1HM-105X	BP E CAPACITOR	1uF 50V M
C510	NEHL1CM-476X	E CAPACITOR	47uF 16V M
C511	NENA1CM-475X	BP E CAPACITOR	4.7uF 16V M
C512	NENA1CM-475X	BP E CAPACITOR	4.7uF 16V M
C513	NENA1CM-475X	BP E CAPACITOR	4.7uF 16V M
C514	NENA1CM-475X	BP E CAPACITOR	4.7uF 16V M
C515	NCB31HK-102X	C CAPACITOR	1000pF 50V K
C516	NCB31HK-102X	C CAPACITOR	1000pF 50V K
C517	NEHL1EM-475X	E CAPACITOR	4.7uF 25V M
C518	NCB31CK-104X	C CAPACITOR	0.1uF 16V K
C519	NCB31CK-104X	C CAPACITOR	0.1uF 16V K
C520	NEHL1CM-106X	E CAPACITOR	10uF 16V M
C531	NCB31HK-102X	C CAPACITOR	1000pF 50V K
C532	NCB31HK-102X	C CAPACITOR	1000pF 50V K
C551	NCB31HK-102X	C CAPACITOR	1000pF 50V K
C552	NCB31HK-102X	C CAPACITOR	1000pF 50V K
C555	NEHL1CM-106X	E CAPACITOR	10uF 16V M
C557	NCB31CK-104X	C CAPACITOR	0.1uF 16V K
C558	NCB30JK-225X	C CAPACITOR	2.2uF 6.3V K
C559	NEHL0JM-226X	E CAPACITOR	22uF 6.3V M
C560	NCB30JK-225X	C CAPACITOR	2.2uF 6.3V K
C561	NEHL0JM-226X	E CAPACITOR	22uF 6.3V M
C562	NEHL0JM-226X	E CAPACITOR	22uF 6.3V M
C563	NCB31HK-103X	C CAPACITOR	0.01uF 50V K
C564	NCB31HK-103X	C CAPACITOR	0.01uF 50V K
C565	NCB31HK-104X	C CAPACITOR	0.1uF 50V K
C566	NCB31HK-104X	C CAPACITOR	0.1uF 50V K
C567	NCB31HK-103X	C CAPACITOR	0.01uF 50V K
C568	NCB31HK-103X	C CAPACITOR	0.01uF 50V K
C569	NCB31HK-103X	C CAPACITOR	0.01uF 50V K
C571	NEHL0JM-226X	E CAPACITOR	22uF 6.3V M
C572	NCB31CK-105X	C CAPACITOR	1uF 16V K
C573	NEHL0JM-226X	E CAPACITOR	22uF 6.3V M
C574	NCB31HK-103X	C CAPACITOR	0.01uF 50V K
C575	NCB31HK-103X	C CAPACITOR	0.01uF 50V K
C601	NCB31HK-103X	C CAPACITOR	0.01uF 50V K
C602	NEHL1EM-336X	E CAPACITOR	33uF 25V M
C603	NEHL1EM-336X	E CAPACITOR	33uF 25V M
C604	NCB31EK-104X	C CAPACITOR	0.1uF 25V K
C605	NCB31HK-103X	C CAPACITOR	0.01uF 50V K
C606	NCB31HK-104X	C CAPACITOR	0.1uF 50V K
C607	QETM1EM-477	E CAPACITOR	470uF 25V M
C616	NEHL1EM-475X	E CAPACITOR	4.7uF 25V M
C617	NEHL1EM-475X	E CAPACITOR	4.7uF 25V M
C623	NCB21CK-184X	C CAPACITOR	0.18uF 16V K
C624	NCB31HK-222X	C CAPACITOR	2200pF 50V K
C625	NCB31HK-183X	C CAPACITOR	0.018uF 50V K
C628	NCB31HK-123X	C CAPACITOR	0.012uF 50V K
C629	NCB31HK-222X	C CAPACITOR	2200pF 50V K
C630	NCB21CK-184X	C CAPACITOR	0.18uF 16V K
C632	NCB31HK-104X	C CAPACITOR	0.1uF 50V K
C633	NCB31HK-822X	C CAPACITOR	8200pF 50V K
C634	NCB31HK-822X	C CAPACITOR	8200pF 50V K
C635	NCB31HK-681X	C CAPACITOR	680pF 50V K
C636	NCB31HK-681X	C CAPACITOR	680pF 50V K
C638	NCB31EK-223X	C CAPACITOR	0.022uF 25V K
C639	NCB31HK-104X	C CAPACITOR	0.1uF 50V K
C643	NCB31HK-104X	C CAPACITOR	0.1uF 50V K
C644	NEHL1EM-475X	E CAPACITOR	4.7uF 25V M
C647	NCB31CK-105X	C CAPACITOR	1uF 16V K
C648	NCB31CK-105X	C CAPACITOR	1uF 16V K
C649	NCB31CK-105X	C CAPACITOR	1uF 16V K
C650	NCB31CK-105X	C CAPACITOR	1uF 16V K
C651	NCB31CK-105X	C CAPACITOR	1uF 16V K
C653	NCB31EK-223X	C CAPACITOR	0.022uF 25V K
C654	NCB31CK-473X	C CAPACITOR	0.047uF 16V K
C655	NEHL1CM-106X	E CAPACITOR	10uF 16V M
C659	NEHL1CM-106X	E CAPACITOR	10uF 16V M
C660	NCB31CK-105X	C CAPACITOR	1uF 16V K
C661	NCB31CK-105X	C CAPACITOR	1uF 16V K
C662	NCB21AK-225X	C CAPACITOR	2.2uF 10V K
C663	NCB31CK-105X	C CAPACITOR	1uF 16V K

⚠Ref No.	Part No.	Part Name	Description Local
C664	NCB31CK-105X	C CAPACITOR	1uF 16V K
C665	NCB31CK-105X	C CAPACITOR	1uF 16V K
C666	NEHL1CM-106X	E CAPACITOR	10uF 16V M
C667	NCB31CK-105X	C CAPACITOR	1uF 16V K
C668	NCB31CK-105X	C CAPACITOR	1uF 16V K
C669	NCB31CK-105X	C CAPACITOR	1uF 16V K
C670	NCB31CK-105X	C CAPACITOR	1uF 16V K
C671	NCB31CK-105X	C CAPACITOR	1uF 16V K
C672	NCB31AK-474X	C CAPACITOR	0.47uF 10V K
C675	NCB30JK-225X	C CAPACITOR	2.2uF 6.3V K
C676	NCB30JK-225X	C CAPACITOR	2.2uF 6.3V K
C677	NDC31HJ-330X	C CAPACITOR	33pF 50V J
C678	NDC31HJ-330X	C CAPACITOR	33pF 50V J
C679	NDC31HJ-101X	C CAPACITOR	100pF 50V J
C680	NDC31HJ-101X	C CAPACITOR	100pF 50V J
C681	NCB31CK-104X	C CAPACITOR	0.1uF 16V K
C682	NCB31CK-104X	C CAPACITOR	0.1uF 16V K
C683	NCB31HK-332X	C CAPACITOR	3300pF 50V K
C684	NCB31HK-332X	C CAPACITOR	3300pF 50V K
C685	NCB31HK-222X	C CAPACITOR	2200pF 50V K
C686	NCB31HK-222X	C CAPACITOR	2200pF 50V K
C687	NCB31HK-472X	C CAPACITOR	4700pF 50V K
C688	NCB31HK-472X	C CAPACITOR	4700pF 50V K
C689	NCB31HK-104X	C CAPACITOR	0.1uF 50V K
C690	NCB31HK-104X	C CAPACITOR	0.1uF 50V K
C691	NEHL1EM-226X	E CAPACITOR	22uF 25V M
C692	NEHL1EM-226X	E CAPACITOR	22uF 25V M
C693	NCB11EK-105X	C CAPACITOR	1uF 25V K
C694	NCB11EK-105X	C CAPACITOR	1uF 25V K
C697	NCB31HK-104X	C CAPACITOR	0.1uF 50V K
C698	NCB31HK-104X	C CAPACITOR	0.1uF 50V K
C699	QETM1HM-226	E CAPACITOR	22uF 50V M
C700	QETM1HM-226	E CAPACITOR	22uF 50V M
C701	NCB31HK-104X	C CAPACITOR	0.1uF 50V K
C702	QETM1EM-477	E CAPACITOR	470uF 25V M
C704	NCB31HK-104X	C CAPACITOR	0.1uF 50V K
C705	QETM1EM-477	E CAPACITOR	470uF 25V M
C707	NCB31HK-104X	C CAPACITOR	0.1uF 50V K
C708	NCB31HK-561X	C CAPACITOR	560pF 50V K
C709	NCB31HK-561X	C CAPACITOR	560pF 50V K
C711	NCB31HK-561X	C CAPACITOR	560pF 50V K
C712	NCB31HK-561X	C CAPACITOR	560pF 50V K
C713	QFVF1HJ-224Z	MF CAPACITOR	0.22uF 50V J
C716	NEHL1CM-476X	E CAPACITOR	47uF 16V M
C717	NCB31CK-105X	C CAPACITOR	1uF 16V K
C719	QFVF1HJ-224Z	MF CAPACITOR	0.22uF 50V J
C720	QFVF1HJ-224Z	MF CAPACITOR	0.22uF 50V J
C721	QFVF1HJ-224Z	MF CAPACITOR	0.22uF 50V J
C722	NCB31HK-153X	C CAPACITOR	0.015uF 50V K
C723	NCB31HK-153X	C CAPACITOR	0.015uF 50V K
C724	NCB31HK-104X	C CAPACITOR	0.1uF 50V K
C727	NCB31HK-104X	C CAPACITOR	0.1uF 50V K
C728	QETM1EM-477	E CAPACITOR	470uF 25V M
C729	NEHL0JM-226X	E CAPACITOR	22uF 6.3V M
C730	NEHL1CM-106X	E CAPACITOR	10uF 16V M
C731	NCB31HK-104X	C CAPACITOR	0.1uF 50V K
C732	NCB31CK-105X	C CAPACITOR	1uF 16V K
C733	NCB31HK-153X	C CAPACITOR	0.015uF 50V K
C734	NENA1CM-475X	BP E CAPACITOR	4.7uF 16V M
C735	NDC31HJ-330X	C CAPACITOR	33pF 50V J
C736	NDC31HJ-330X	C CAPACITOR	33pF 50V J
C737	NEHL1CM-106X	E CAPACITOR	10uF 16V M
C738	NCB31HK-104X	C CAPACITOR	0.1uF 50V K
C739	NENA1CM-475X	BP E CAPACITOR	4.7uF 16V M
C740	NEHL1CM-476X	E CAPACITOR	47uF 16V M
C741	NEHL1CM-476X	E CAPACITOR	47uF 16V M
C742	NEHL1HM-105X	E CAPACITOR	1uF 50V M
C743	NEHL1HM-105X	E CAPACITOR	1uF 50V M
C744	NDC31HJ-100X	C CAPACITOR	10pF 50V J
C745	NDC31HJ-100X	C CAPACITOR	10pF 50V J
C904	NCB11AK-106X	C CAPACITOR	10uF 10V K
C905	NEHM1CM-476X	E CAPACITOR	47uF 16V M
C911	NEX51CM-335X	E CAPACITOR	3.3uF 16V M
C912	NEHL1CM-476X	E CAPACITOR	47uF 16V M
C913	NEX51CM-335X	E CAPACITOR	3.3uF 16V M
C914	NEX50JM-156X	E CAPACITOR	15uF 6.3V M
C915	NEHL1CM-476X	E CAPACITOR	47uF 16V M
C916	NEX50JM-156X	E CAPACITOR	15uF 6.3V M
C919	NEX51CM-335X	E CAPACITOR	3.3uF 16V M
C920	NEX50JM-156X	E CAPACITOR	15uF 6.3V M
R126	NRSA63J-0R0X	MG RESISTOR	0Ω 1/16W J
R127	NRSA63J-0R0X	MG RESISTOR	0Ω 1/16W J
R128	NRSA63J-0R0X	MG RESISTOR	0Ω 1/16W J
R136	NRSA63J-0R0X	MG RESISTOR	0Ω 1/16W J
R137	NRSA63J-0R0X	MG RESISTOR	0Ω 1/16W J
R140	NRSA63J-682X	MG RESISTOR	6.8kΩ 1/16W J
R141	NRSA63J-682X	MG RESISTOR	6.8kΩ 1/16W J
R142	NRSA63J-333X	MG RESISTOR	33kΩ 1/16W J
R143	NRSA63J-682X	MG RESISTOR	6.8kΩ 1/16W J
R144	NRSA63J-682X	MG RESISTOR	6.8kΩ 1/16W J
R145	NRSA63J-333X	MG RESISTOR	33kΩ 1/16W J
R146	NRSA63J-682X	MG RESISTOR	6.8kΩ 1/16W J
R147	NRSA63J-682X	MG RESISTOR	6.8kΩ 1/16W J
R148	NRSA63J-0R0X	MG RESISTOR	0Ω 1/16W J
R149	NRSA63J-0R0X	MG RESISTOR	0Ω 1/16W J
R150	NRSA63J-333X	MG RESISTOR	33kΩ 1/16W J
R151	NRSA63J-682X	MG RESISTOR	6.8kΩ 1/16W J
R152	NRSA63J-682X	MG RESISTOR	6.8kΩ 1/16W J
R153	NRSA63J-682X	MG RESISTOR	6.8kΩ 1/16W J
R154	NRSA63J-682X	MG RESISTOR	6.8kΩ 1/16W J
R157	NRSA63J-333X	MG RESISTOR	33kΩ 1/16W J
R158	NRSA63J-682X	MG RESISTOR	6.8kΩ 1/16W J
R159	NRSA63J-682X	MG RESISTOR	6.8kΩ 1/16W J
R160	NRSA63J-682X	MG RESISTOR	6.8kΩ 1/16W J
R161	NRSA63J-682X	MG RESISTOR	6.8kΩ 1/16W J
R164	NRSA63J-224X	MG RESISTOR	220kΩ 1/16W J
R165	NRSA63J-224X	MG RESISTOR	220kΩ 1/16W J
R166	NRSA63J-224X	MG RESISTOR	220kΩ 1/16W J
R167	NRSA63J-224X	MG RESISTOR	220kΩ 1/16W J
R168	NRSA63J-101X	MG RESISTOR	100Ω 1/16W J
R169	NRSA63J-101X	MG RESISTOR	100Ω 1/16W J
R170	NRSA63J-0R0X	MG RESISTOR	0Ω 1/16W J
R171	NRSA63J-0R0X	MG RESISTOR	0Ω 1/16W J
R172	NRSA63J-0R0X	MG RESISTOR	0Ω 1/16W J
R174	NRSA63J-0R0X	MG RESISTOR	0Ω 1/16W J
R175	NRSA63J-0R0X	MG RESISTOR	0Ω 1/16W J
R176	NRSA63J-0R0X	MG RESISTOR	0Ω 1/16W J
R178	NRSA63J-0R0X	MG RESISTOR	0Ω 1/16W J
R179	NRSA63J-0R0X	MG RESISTOR	0Ω 1/16W J
R180	NRSA63J-0R0X	MG RESISTOR	0Ω 1/16W J
R181	NRSA63J-224X	MG RESISTOR	220kΩ 1/16W J
R183	NRSA63J-0R0X	MG RESISTOR	0Ω 1/16W J
R184	NRSA63J-224X	MG RESISTOR	220kΩ 1/16W J
R185	NRSA63J-0R0X	MG RESISTOR	0Ω 1/16W J
R187	NRSA63J-0R0X	MG RESISTOR	0Ω 1/16W J
R188	NRSA63J-103X	MG RESISTOR	10kΩ 1/16W J
R189	NRSA63J-0R0X	MG RESISTOR	0Ω 1/16W J
R194	NRSA63J-0R0X	MG RESISTOR	0Ω 1/16W J
R204	NRSA63J-0R0X	MG RESISTOR	0Ω 1/16W J
R205	NRSA63J-0R0X	MG RESISTOR	0Ω 1/16W J
R206	NRSA63J-562X	MG RESISTOR	5.6kΩ 1/16W J
R207	NRSA63J-562X	MG RESISTOR	5.6kΩ 1/16W J
R208	NRSA63J-0R0X	MG RESISTOR	0Ω 1/16W J
R209	NRSA63J-0R0X	MG RESISTOR	0Ω 1/16W J
R210	NRSA63J-0R0X	MG RESISTOR	0Ω 1/16W J
R219	NRSA63J-101X	MG RESISTOR	100Ω 1/16W J
R220	NRSA63J-101X	MG RESISTOR	100Ω 1/16W J
R221	NRSA63J-0R0X	MG RESISTOR	0Ω 1/16W J
R223	NRSA63J-223X	MG RESISTOR	22kΩ 1/16W J
R224	NRSA63J-223X	MG RESISTOR	22kΩ 1/16W J
R225	NRSA63J-103X	MG RESISTOR	10kΩ 1/16W J
R228	NRSA63J-0R0X	MG RESISTOR	0Ω 1/16W J
R229	NRSA63J-0R0X	MG RESISTOR	0Ω 1/16W J
R230	NRSA63J-0R0X	MG RESISTOR	0Ω 1/16W J
R231	NRSA63J-0R0X	MG RESISTOR	0Ω 1/16W J
R232	NRSA63J-0R0X	MG RESISTOR	0Ω 1/16W J
R233	NRSA63J-0R0X	MG RESISTOR	0Ω 1/16W J
R234	NRSA63J-0R0X	MG RESISTOR	0Ω 1/16W J
R235	NRSA63J-0R0X	MG RESISTOR	0Ω 1/16W J
R241	NRSA63J-0R0X	MG RESISTOR	0Ω 1/16W J
R243	NRSA63J-0R0X	MG RESISTOR	0Ω 1/16W J
R245	NRSA63J-0R0X	MG RESISTOR	0Ω 1/16W J
R246	NRSA63J-0R0X	MG RESISTOR	0Ω 1/16W J
R247	NRSA63J-0R0X	MG RESISTOR	0Ω 1/16W J
R249	NRSA63J-0R0X	MG RESISTOR	0Ω 1/16W J
R251	NRSA63J-0R0X	MG RESISTOR	0Ω 1/16W J
R253	NRSA63J-0R0X	MG RESISTOR	0Ω 1/16W J
R255	NRSA63J-0R0X	MG RESISTOR	0Ω 1/16W J
R257	NRSA63J-0R0X	MG RESISTOR	0Ω 1/16W J
R259	NRSA63J-0R0X	MG RESISTOR	0Ω 1/16W J
R260	NRSA63J-101X	MG RESISTOR	100Ω 1/16W J
R261	NRSA63J-272X	MG RESISTOR	2.7kΩ 1/16W J
R262	NRSA63J-101X	MG RESISTOR	100Ω 1/16W J
R263	NRSA63J-331X	MG RESISTOR	330Ω 1/16W J
R264	NRSA63J-101X	MG RESISTOR	100Ω 1/16W J
R265	NRSA63J-331X	MG RESISTOR	330Ω 1/16W J
R266	NRSA63J-101X	MG RESISTOR	100Ω 1/16W J
R267	NRSA63J-331X	MG RESISTOR	330Ω 1/16W J
R281	NRSA63J-0R0X	MG RESISTOR	0Ω 1/16W J
R284	NRSA63J-472X	MG RESISTOR	4.7kΩ 1/16W J
R285	NRSA63J-472X	MG RESISTOR	4.7kΩ 1/16W J
R286	NRSA63J-0R0X	MG RESISTOR	0Ω 1/16W J
R287	NRSA63J-153X	MG RESISTOR	15kΩ 1/16W J
R288	NRSA63J-153X	MG RESISTOR	15kΩ 1/16W J
R289	NRSA63J-103X	MG RESISTOR	10kΩ 1/16W J
R290	NRSA63J-153X	MG RESISTOR	15kΩ 1/16W J
R291	NRSA63J-103X	MG RESISTOR	10kΩ 1/16W J
R292	NRSA63J-153X	MG RESISTOR	15kΩ 1/16W J
R299	NRSA63J-0R0X	MG RESISTOR	0Ω 1/16W J

⚠Ref No.	Part No.	Part Name	Description	Local
R306	NRSA63J-332X	MG RESISTOR	3.3kΩ 1/16W J	
R307	NRSA63J-332X	MG RESISTOR	3.3kΩ 1/16W J	
R308	NRSA63J-0R0X	MG RESISTOR	0Ω 1/16W J	
R309	NRSA63J-104X	MG RESISTOR	100kΩ 1/16W J	
R310	NRSA63J-104X	MG RESISTOR	100kΩ 1/16W J	
R311	NRSA63J-104X	MG RESISTOR	100kΩ 1/16W J	
R312	NRSA63J-104X	MG RESISTOR	100kΩ 1/16W J	
R313	NRSA63J-104X	MG RESISTOR	100kΩ 1/16W J	
R314	NRSA63J-223X	MG RESISTOR	22kΩ 1/16W J	
R315	NRSA63J-682X	MG RESISTOR	6.8kΩ 1/16W J	
R316	NRSA63J-104X	MG RESISTOR	100kΩ 1/16W J	
R317	NRSA63J-104X	MG RESISTOR	100kΩ 1/16W J	
R318	NRSA63J-0R0X	MG RESISTOR	0Ω 1/16W J	
R319	NRSA63J-0R0X	MG RESISTOR	0Ω 1/16W J	
R395	NRSA63J-0R0X	MG RESISTOR	0Ω 1/16W J	
R401	NRSA63J-750X	MG RESISTOR	75Ω 1/16W J	
R402	NRSA63J-750X	MG RESISTOR	75Ω 1/16W J	
R403	NRSA63J-750X	MG RESISTOR	75Ω 1/16W J	
R404	NRSA63J-224X	MG RESISTOR	220kΩ 1/16W J	
R405	NRSA63J-224X	MG RESISTOR	220kΩ 1/16W J	
R407	NRSA63J-750X	MG RESISTOR	75Ω 1/16W J	
R408	NRSA63J-750X	MG RESISTOR	75Ω 1/16W J	
R409	NRSA63J-750X	MG RESISTOR	75Ω 1/16W J	
R410	NRSA63J-750X	MG RESISTOR	75Ω 1/16W J	
R411	NRSA63J-224X	MG RESISTOR	220kΩ 1/16W J	
R412	NRSA63J-224X	MG RESISTOR	220kΩ 1/16W J	
R413	NRSA63J-750X	MG RESISTOR	75Ω 1/16W J	
R414	NRSA63J-750X	MG RESISTOR	75Ω 1/16W J	
R415	NRSA63J-750X	MG RESISTOR	75Ω 1/16W J	
R416	NRSA63J-750X	MG RESISTOR	75Ω 1/16W J	
R417	NRSA63J-750X	MG RESISTOR	75Ω 1/16W J	
R418	NRSA63J-750X	MG RESISTOR	75Ω 1/16W J	
R419	NRSA63J-224X	MG RESISTOR	220kΩ 1/16W J	
R420	NRSA63J-224X	MG RESISTOR	220kΩ 1/16W J	
R421	NRSA63J-224X	MG RESISTOR	220kΩ 1/16W J	
R422	NRSA63J-224X	MG RESISTOR	220kΩ 1/16W J	
R423	NRSA63J-224X	MG RESISTOR	220kΩ 1/16W J	
R431	NRSA63J-750X	MG RESISTOR	75Ω 1/16W J	
R433	NRSA63J-750X	MG RESISTOR	75Ω 1/16W J	
R434	NRSA63J-222X	MG RESISTOR	2.2kΩ 1/16W J	
R435	NRSA63J-750X	MG RESISTOR	75Ω 1/16W J	
R436	NRSA63J-222X	MG RESISTOR	2.2kΩ 1/16W J	
R437	NRSA63J-391X	MG RESISTOR	390Ω 1/16W J	
R438	NRSA63J-223X	MG RESISTOR	22kΩ 1/16W J	
R439	NRSA63J-471X	MG RESISTOR	470Ω 1/16W J	
R440	NRSA63J-391X	MG RESISTOR	390Ω 1/16W J	
R441	NRSA63J-223X	MG RESISTOR	22kΩ 1/16W J	
R442	NRSA63J-471X	MG RESISTOR	470Ω 1/16W J	
R443	NRSA63J-102X	MG RESISTOR	1kΩ 1/16W J	
R444	NRSA63J-393X	MG RESISTOR	39kΩ 1/16W J	
R451	NRSA63J-221X	MG RESISTOR	220Ω 1/16W J	
R452	NRSA63J-823X	MG RESISTOR	82kΩ 1/16W J	
R453	NRSA63J-471X	MG RESISTOR	470Ω 1/16W J	
R454	NRSA63J-221X	MG RESISTOR	220Ω 1/16W J	
R455	NRSA63J-823X	MG RESISTOR	82kΩ 1/16W J	
R456	NRSA63J-471X	MG RESISTOR	470Ω 1/16W J	
R457	NRSA63J-102X	MG RESISTOR	1kΩ 1/16W J	
R458	NRSA63J-393X	MG RESISTOR	39kΩ 1/16W J	
R461	NRSA63J-750X	MG RESISTOR	75Ω 1/16W J	
R462	NRSA63J-0R0X	MG RESISTOR	0Ω 1/16W J	
R463	NRSA63J-0R0X	MG RESISTOR	0Ω 1/16W J	
R464	NRSA63J-750X	MG RESISTOR	75Ω 1/16W J	
R465	NRSA63J-0R0X	MG RESISTOR	0Ω 1/16W J	
R466	NRSA63J-0R0X	MG RESISTOR	0Ω 1/16W J	
R467	NRSA63J-750X	MG RESISTOR	75Ω 1/16W J	
R468	NRSA63J-0R0X	MG RESISTOR	0Ω 1/16W J	
R469	NRSA63J-0R0X	MG RESISTOR	0Ω 1/16W J	
R470	NRSA63J-0R0X	MG RESISTOR	0Ω 1/16W J	
R472	NRSA63J-0R0X	MG RESISTOR	0Ω 1/16W J	
R474	NRSA63J-0R0X	MG RESISTOR	0Ω 1/16W J	
R475	NRSA63J-102X	MG RESISTOR	1kΩ 1/16W J	
R476	NRSA63J-102X	MG RESISTOR	1kΩ 1/16W J	
R491	NRSA63J-105X	MG RESISTOR	1MΩ 1/16W J	
R501	NRSA63J-221X	MG RESISTOR	220Ω 1/16W J	
R502	NRSA63J-221X	MG RESISTOR	220Ω 1/16W J	
R503	NRSA63J-472X	MG RESISTOR	4.7kΩ 1/16W J	
R504	NRSA63J-332X	MG RESISTOR	3.3kΩ 1/16W J	
R505	NRSA63J-332X	MG RESISTOR	3.3kΩ 1/16W J	
R506	NRSA63J-472X	MG RESISTOR	4.7kΩ 1/16W J	
R507	NRSA63J-332X	MG RESISTOR	3.3kΩ 1/16W J	
R508	NRSA63J-102X	MG RESISTOR	1kΩ 1/16W J	
R509	NRSA63J-102X	MG RESISTOR	1kΩ 1/16W J	
R510	NRSA63J-332X	MG RESISTOR	3.3kΩ 1/16W J	
R511	NRSA63J-103X	MG RESISTOR	10kΩ 1/16W J	
R512	NRSA63J-333X	MG RESISTOR	33kΩ 1/16W J	
R513	NRSA63J-333X	MG RESISTOR	33kΩ 1/16W J	
R514	NRSA63J-103X	MG RESISTOR	10kΩ 1/16W J	
R515	NRSA63J-102X	MG RESISTOR	1kΩ 1/16W J	
R516	NRSA63J-102X	MG RESISTOR	1kΩ 1/16W J	
R517	NRSA63J-333X	MG RESISTOR	33kΩ 1/16W J	
R518	NRSA63J-333X	MG RESISTOR	33kΩ 1/16W J	
R519	NRSA63J-333X	MG RESISTOR	33kΩ 1/16W J	
R520	NRSA63J-333X	MG RESISTOR	33kΩ 1/16W J	
R521	NRSA63J-332X	MG RESISTOR	3.3kΩ 1/16W J	
R522	NRSA63J-332X	MG RESISTOR	3.3kΩ 1/16W J	
R523	NRSA63J-102X	MG RESISTOR	1kΩ 1/16W J	
R524	NRSA63J-102X	MG RESISTOR	1kΩ 1/16W J	
R525	NRSA63J-102X	MG RESISTOR	1kΩ 1/16W J	
R526	NRSA63J-102X	MG RESISTOR	1kΩ 1/16W J	
R527	NRSA63J-471X	MG RESISTOR	470Ω 1/16W J	
R528	NRSA63J-471X	MG RESISTOR	470Ω 1/16W J	
R529	NRSA63J-101X	MG RESISTOR	100Ω 1/16W J	
R530	NRSA63J-0R0X	MG RESISTOR	0Ω 1/16W J	
R531	NRSA63J-332X	MG RESISTOR	3.3kΩ 1/16W J	
R532	NRSA63J-103X	MG RESISTOR	10kΩ 1/16W J	
R533	NRSA63J-103X	MG RESISTOR	10kΩ 1/16W J	
R534	NRSA63J-101X	MG RESISTOR	100Ω 1/16W J	
R535	NRSA63J-101X	MG RESISTOR	100Ω 1/16W J	
R553	NRSA63J-103X	MG RESISTOR	10kΩ 1/16W J	
R554	NRSA63J-0R0X	MG RESISTOR	0Ω 1/16W J	
R555	NRSA63J-0R0X	MG RESISTOR	0Ω 1/16W J	
R556	NRSA63J-103X	MG RESISTOR	10kΩ 1/16W J	
R557	NRSA63J-103X	MG RESISTOR	10kΩ 1/16W J	
R560	NRSA63J-682X	MG RESISTOR	6.8kΩ 1/16W J	
R561	NRSA63J-221X	MG RESISTOR	220Ω 1/16W J	
R562	NRSA63J-221X	MG RESISTOR	220Ω 1/16W J	
R563	NRSA63J-221X	MG RESISTOR	220Ω 1/16W J	
R564	NRSA63J-221X	MG RESISTOR	220Ω 1/16W J	
R565	NRSA63J-0R0X	MG RESISTOR	0Ω 1/16W J	
R566	NRSA63J-101X	MG RESISTOR	100Ω 1/16W J	
R567	NRSA63J-101X	MG RESISTOR	100Ω 1/16W J	
R568	NRSA63J-103X	MG RESISTOR	10kΩ 1/16W J	
R569	NRSA63J-103X	MG RESISTOR	10kΩ 1/16W J	
R570	NRSA63J-101X	MG RESISTOR	100Ω 1/16W J	
R571	NRSA63J-105X	MG RESISTOR	1MΩ 1/16W J	
R572	NRSA63J-4R7X	MG RESISTOR	4.7Ω 1/16W J	
R573	NRSA63J-103X	MG RESISTOR	10kΩ 1/16W J	
R574	NRSA63J-0R0X	MG RESISTOR	0Ω 1/16W J	
R575	NRSA63J-103X	MG RESISTOR	10kΩ 1/16W J	
R576	NRSA63J-103X	MG RESISTOR	10kΩ 1/16W J	
R577	NRSA63J-103X	MG RESISTOR	10kΩ 1/16W J	
R578	NRSA63J-103X	MG RESISTOR	10kΩ 1/16W J	
R584	NRSA63J-103X	MG RESISTOR	10kΩ 1/16W J	
R585	NRSA63J-103X	MG RESISTOR	10kΩ 1/16W J	
R588	NRSA63J-0R0X	MG RESISTOR	0Ω 1/16W J	
R589	NRSA63J-0R0X	MG RESISTOR	0Ω 1/16W J	
R590	NRSA63J-0R0X	MG RESISTOR	0Ω 1/16W J	
R591	NRSA63J-0R0X	MG RESISTOR	0Ω 1/16W J	
R592	NRSA63J-0R0X	MG RESISTOR	0Ω 1/16W J	
R593	NRSA63J-0R0X	MG RESISTOR	0Ω 1/16W J	
R594	NRSA63J-0R0X	MG RESISTOR	0Ω 1/16W J	
R597	NRSA63J-331X	MG RESISTOR	330Ω 1/16W J	
R598	NRSA63J-330X	MG RESISTOR	33Ω 1/16W J	
R599	NRSA63J-471X	MG RESISTOR	470Ω 1/16W J	
R601	NRSA63J-0R0X	MG RESISTOR	0Ω 1/16W J	
R602	NRSA63J-0R0X	MG RESISTOR	0Ω 1/16W J	
R603	NRSA63J-562X	MG RESISTOR	5.6kΩ 1/16W J	
R604	NRSA63J-182X	MG RESISTOR	1.8kΩ 1/16W J	
R605	NRSA63J-183X	MG RESISTOR	18kΩ 1/16W J	
R606	NRSA63J-562X	MG RESISTOR	5.6kΩ 1/16W J	
R607	NRSA63J-473X	MG RESISTOR	47kΩ 1/16W J	
R608	NRSA63J-222X	MG RESISTOR	2.2kΩ 1/16W J	
R620	NRSA63J-0R0X	MG RESISTOR	0Ω 1/16W J	
R623	NRSA63J-0R0X	MG RESISTOR	0Ω 1/16W J	
R625	NRSA63J-101X	MG RESISTOR	100Ω 1/16W J	
R628	NRSA63J-101X	MG RESISTOR	100Ω 1/16W J	
R634	NRSA63J-153X	MG RESISTOR	15kΩ 1/16W J	
R635	NRSA63J-563X	MG RESISTOR	56kΩ 1/16W J	
R636	NRSA63J-473X	MG RESISTOR	47kΩ 1/16W J	
R638	NRSA63J-183X	MG RESISTOR	18kΩ 1/16W J	
R641	NRSA63J-332X	MG RESISTOR	3.3kΩ 1/16W J	
R642	NRSA63J-163X	MG RESISTOR	16kΩ 1/16W J	
R644	NRSA63J-562X	MG RESISTOR	5.6kΩ 1/16W J	
R645	NRSA63J-222X	MG RESISTOR	2.2kΩ 1/16W J	
R647	NRSA63J-183X	MG RESISTOR	18kΩ 1/16W J	
R649	NRSA63J-683X	MG RESISTOR	68kΩ 1/16W J	
R650	NRSA63J-333X	MG RESISTOR	33kΩ 1/16W J	
R651	NRSA63J-101X	MG RESISTOR	100Ω 1/16W J	
R652	NRSA63J-101X	MG RESISTOR	100Ω 1/16W J	
R653	NRSA63J-562X	MG RESISTOR	5.6kΩ 1/16W J	
R661	NRSA63J-103X	MG RESISTOR	10kΩ 1/16W J	
R662	NRSA63J-332X	MG RESISTOR	3.3kΩ 1/16W J	
R663	NRSA63J-332X	MG RESISTOR	3.3kΩ 1/16W J	
R666	NRSA63J-0R0X	MG RESISTOR	0Ω 1/16W J	
R667	NRSA63J-101X	MG RESISTOR	100Ω 1/16W J	
R668	NRSA63J-101X	MG RESISTOR	100Ω 1/16W J	
R671	NRSA63J-105X	MG RESISTOR	1MΩ 1/16W J	
R672	NRSA63J-102X	MG RESISTOR	1kΩ 1/16W J	
R673	NRSA63J-152X	MG RESISTOR	1.5kΩ 1/16W J	
R674	NRSA63J-152X	MG RESISTOR	1.5kΩ 1/16W J	

⚠Ref No.	Part No.	Part Name	Description Local
R675	NRSA63J-101X	MG RESISTOR	100Ω 1/16W J
R676	NRSA63J-102X	MG RESISTOR	1kΩ 1/16W J
R677	NRSA63J-104X	MG RESISTOR	100kΩ 1/16W J
R678	NRSA63J-104X	MG RESISTOR	100kΩ 1/16W J
R679	NRSA63J-102X	MG RESISTOR	1kΩ 1/16W J
R680	NRSA63J-151X	MG RESISTOR	150Ω 1/16W J
R681	NRSA63J-392X	MG RESISTOR	3.9kΩ 1/16W J
R682	NRSA63J-392X	MG RESISTOR	3.9kΩ 1/16W J
R683	NRSA63J-103X	MG RESISTOR	10kΩ 1/16W J
R684	NRSA63J-103X	MG RESISTOR	10kΩ 1/16W J
R685	QRJ149J-102	UNF C RESISTOR	1kΩ 1/4W J
R687	NRSA63J-103X	MG RESISTOR	10kΩ 1/16W J
R694	NRSA63J-0R0X	MG RESISTOR	0Ω 1/16W J
R695	NRSA63J-0R0X	MG RESISTOR	0Ω 1/16W J
R696	NRSA63J-0R0X	MG RESISTOR	0Ω 1/16W J
R700	NRSA63J-101X	MG RESISTOR	100Ω 1/16W J
R701	NRSA63J-101X	MG RESISTOR	100Ω 1/16W J
R702	NRSA63J-101X	MG RESISTOR	100Ω 1/16W J
R703	NRSA63J-101X	MG RESISTOR	100Ω 1/16W J
R704	NRSA63J-101X	MG RESISTOR	100Ω 1/16W J
R706	NRSA63J-101X	MG RESISTOR	100Ω 1/16W J
R710	NRSA63J-103X	MG RESISTOR	10kΩ 1/16W J
R711	NRSA63J-562X	MG RESISTOR	5.6kΩ 1/16W J
R712	NRSA63J-101X	MG RESISTOR	100Ω 1/16W J
R713	NRSA63J-101X	MG RESISTOR	100Ω 1/16W J
R718	NRSA63J-104X	MG RESISTOR	100kΩ 1/16W J
R719	NRSA63J-563X	MG RESISTOR	56kΩ 1/16W J
R720	NRSA63J-153X	MG RESISTOR	15kΩ 1/16W J
R722	NRSA63J-102X	MG RESISTOR	1kΩ 1/16W J
R723	NRSA63J-102X	MG RESISTOR	1kΩ 1/16W J
R724	NRSA63J-0R0X	MG RESISTOR	0Ω 1/16W J
R725	NRSA63J-102X	MG RESISTOR	1kΩ 1/16W J
R726	NRSA63J-102X	MG RESISTOR	1kΩ 1/16W J
R727	NRSA63J-393X	MG RESISTOR	39kΩ 1/16W J
R728	NRSA63J-393X	MG RESISTOR	39kΩ 1/16W J
R729	QRK129J-5R6	UNF C RESISTOR	5.6Ω 1/2W J
R730	QRK129J-5R6	UNF C RESISTOR	5.6Ω 1/2W J
R731	QRK129J-220	UNF C RESISTOR	22Ω 1/2W J
R732	QRK129J-220	UNF C RESISTOR	22Ω 1/2W J
R733	NRSA63J-153X	MG RESISTOR	15kΩ 1/16W J
R735	NRSA63J-103X	MG RESISTOR	10kΩ 1/16W J
R736	NRSA63J-333X	MG RESISTOR	33kΩ 1/16W J
R737	NRSA63J-103X	MG RESISTOR	10kΩ 1/16W J
R738	NRSA63J-222X	MG RESISTOR	2.2kΩ 1/16W J
R739	NRSA63J-472X	MG RESISTOR	4.7kΩ 1/16W J
R740	NRSA63J-273X	MG RESISTOR	27kΩ 1/16W J
R741	NRSA63J-222X	MG RESISTOR	2.2kΩ 1/16W J
R742	NRSA63J-102X	MG RESISTOR	1kΩ 1/16W J
R743	NRSA63J-333X	MG RESISTOR	33kΩ 1/16W J
R744	NRSA63J-333X	MG RESISTOR	33kΩ 1/16W J
R751	NRSA63J-101X	MG RESISTOR	100Ω 1/16W J
R771	NRSA63J-102X	MG RESISTOR	1kΩ 1/16W J
R772	NRSA63J-104X	MG RESISTOR	100kΩ 1/16W J
R773	NRSA63J-272X	MG RESISTOR	2.7kΩ 1/16W J
R774	NRSA63J-822X	MG RESISTOR	8.2kΩ 1/16W J
R775	NRSA63J-104X	MG RESISTOR	100kΩ 1/16W J
R776	NRSA63J-272X	MG RESISTOR	2.7kΩ 1/16W J
R777	NRSA63J-822X	MG RESISTOR	8.2kΩ 1/16W J
R778	NRSA63J-562X	MG RESISTOR	5.6kΩ 1/16W J
R781	NRSA63J-0R0X	MG RESISTOR	0Ω 1/16W J
R782	NRSA63J-0R0X	MG RESISTOR	0Ω 1/16W J
R791	NRSA63J-0R0X	MG RESISTOR	0Ω 1/16W J
R792	NRSA63J-0R0X	MG RESISTOR	0Ω 1/16W J
R793	NRSA63J-0R0X	MG RESISTOR	0Ω 1/16W J
R794	NRSA63J-0R0X	MG RESISTOR	0Ω 1/16W J
R795	NRSA63J-0R0X	MG RESISTOR	0Ω 1/16W J
R796	NRSA63J-0R0X	MG RESISTOR	0Ω 1/16W J
R797	NRSA63J-0R0X	MG RESISTOR	0Ω 1/16W J
R798	NRSA63J-0R0X	MG RESISTOR	0Ω 1/16W J
R905	NRSA63J-274X	MG RESISTOR	270kΩ 1/16W J
R907	NRS12BJ-471W	MG RESISTOR	470Ω 1/2W J
R908	NRS12BJ-471W	MG RESISTOR	470Ω 1/2W J
R909	NRSA63J-0R0X	MG RESISTOR	0Ω 1/16W J
R910	NRSA63J-0R0X	MG RESISTOR	0Ω 1/16W J
R917	NRSA02J-0R0X	MG RESISTOR	0Ω 1/10W J
R921	NRSA63J-0R0X	MG RESISTOR	0Ω 1/16W J
R922	NRSA63J-0R0X	MG RESISTOR	0Ω 1/16W J
R923	NRSA63J-0R0X	MG RESISTOR	0Ω 1/16W J
R924	NRSA63J-0R0X	MG RESISTOR	0Ω 1/16W J
R925	NRSA63J-0R0X	MG RESISTOR	0Ω 1/16W J
R926	NRSA63J-0R0X	MG RESISTOR	0Ω 1/16W J
R927	NRSA63J-0R0X	MG RESISTOR	0Ω 1/16W J
R928	NRSA63J-222X	MG RESISTOR	2.2kΩ 1/16W J
R933	NRSA63J-0R0X	MG RESISTOR	0Ω 1/16W J
R934	NRSA63J-0R0X	MG RESISTOR	0Ω 1/16W J
R937	NRSA63J-0R0X	MG RESISTOR	0Ω 1/16W J
R938	NRSA63J-0R0X	MG RESISTOR	0Ω 1/16W J
R945	NRSA63J-0R0X	MG RESISTOR	0Ω 1/16W J
R946	NRSA63J-0R0X	MG RESISTOR	0Ω 1/16W J
R951	NRSA63J-820X	MG RESISTOR	82Ω 1/16W J
R952	NRSA63J-820X	MG RESISTOR	82Ω 1/16W J
R953	NRSA63J-820X	MG RESISTOR	82Ω 1/16W J
R954	NRSA63J-0R0X	MG RESISTOR	0Ω 1/16W J
R957	NRSA63J-0R0X	MG RESISTOR	0Ω 1/16W J
R958	NRSA63J-0R0X	MG RESISTOR	0Ω 1/16W J
R967	NRSA63J-0R0X	MG RESISTOR	0Ω 1/16W J
R968	NRSA63J-0R0X	MG RESISTOR	0Ω 1/16W J
R969	NRSA63J-0R0X	MG RESISTOR	0Ω 1/16W J
R971	NRSA63J-680X	MG RESISTOR	68Ω 1/16W J
R972	NRSA63J-680X	MG RESISTOR	68Ω 1/16W J
R973	NRSA63J-0R0X	MG RESISTOR	0Ω 1/16W J
R974	NRSA63J-0R0X	MG RESISTOR	0Ω 1/16W J
R975	NRSA63J-101X	MG RESISTOR	100Ω 1/16W J
R976	NRSA63J-0R0X	MG RESISTOR	0Ω 1/16W J
L101	NQL79GM-100X	COIL	10uH M
L501	NRSA02J-0R0X	MG RESISTOR	0Ω 1/10W J
L601	QQR0621-002Z	FERRITE BEADS	
L602	QQR0621-002Z	FERRITE BEADS	
L605	NQLC8CM-560X	COIL	56uH M
L606	NQLC8CM-560X	COIL	56uH M
L901	NQL52EM-220X	COIL	22uH M
L902	NQL52EM-220X	COIL	22uH M
L903	NQL52EM-220X	COIL	22uH M
L904	NQL52EM-220X	COIL	22uH M
L905	NQL52EM-220X	COIL	22uH M
L906	NQL52EM-220X	COIL	22uH M
CN011	QGF0508C2-50W	CONNECTOR	FFC/FPC (1-50)
CN012	QGF0508C2-40W	CONNECTOR	FFC/FPC (1-40)
CN1T1	QGF1201C2-25	CONNECTOR	FFC/FPC (1-25)
J401	QNZ0825-002	AV JACK	INPUT-1(S/V/L/R)
J402	QNN0349-004	PIN JACK	INPUT-1(COMPONENT)
J403	QNN0764-002	PIN JACK	INPUT-2(V/L/R)
J404	QNN0349-004	PIN JACK	INPUT-2(COMPONENT)
J405	QNZ0825-002	AV JACK	INPUT-3(S/V/L/R)
J406	QNN0765-002	PIN JACK	CENTER CHANNEL-IN
J407	QNZ0825-002	AV JACK	MONITOR/REC-OUT
J409	QNN0766-002	PIN JACK	AUDIO-OUT
J410	QNZ0561-001	D CONNECTOR	PC-IN
K601	NQR0499-002X	FERRITE BEADS	
K602	NQR0499-002X	FERRITE BEADS	
K603	NQR0499-002X	FERRITE BEADS	
K604	NQR0499-002X	FERRITE BEADS	
K605	NQR0499-002X	FERRITE BEADS	
X551	NAX0868-001X	C RESONATOR	8.00MHz
X601	NAX0857-001X	C RESONATOR	25.00MHz

DRIVE P.W. BOARD ASS'Y (SRA-3004A-M2)

⚠Ref No.	Part No.	Part Name	Description Local
IC3001	THC63LVD104AF	IC	
IC3002	THC63LVD104AF	IC	
IC3003	M12L64322A-6TG	IC	
IC3004	M12L64322A-6TG	IC	
IC3005	XC3S10004FGG456	IC	
IC3007	THC63LVDM83R-W	IC	
IC3008	THC63LVDF84B-W	IC	
IC3009	HD74ALVC1G00VSX	IC	
IC3101	ASI6100	IC	
IC3102	HY5DU281622ETPJ	IC	
IC3103	HY5DU281622ETPJ	IC	
IC3104	HY5DU281622ETPJ	IC	
IC3105	HY5DU281622ETPJ	IC	
IC3108	R1141Q331B-X	IC	
IC3109	RC4558D-X	IC	
IC3110	RC4558D-X	IC	
IC3111	RC4558D-X	IC	
IC3112	SC2595STRT-X	IC	
IC3113	SC2595STRT-X	IC	
IC3114	SC2595STRT-X	IC	
IC3301	ASI6100	IC	
IC3302	HY5DU281622ETPJ	IC	
IC3303	HY5DU281622ETPJ	IC	
IC3304	HY5DU281622ETPJ	IC	
IC3305	HY5DU281622ETPJ	IC	
IC3307	HD74ALVC1G00VSX	IC	
IC3308	R1141Q331B-X	IC	
IC3309	RC4558D-X	IC	
IC3310	RC4558D-X	IC	
IC3311	RC4558D-X	IC	
IC3312	SC2595STRT-X	IC	
IC3313	SC2595STRT-X	IC	
IC3314	SC2595STRT-X	IC	
IC3501	ASI6100	IC	
IC3502	HY5DU281622ETPJ	IC	

⚠Ref No.	Part No.	Part Name	Description	Local
IC3503	HY5DU281622ETPJ	IC		
IC3504	HY5DU281622ETPJ	IC		
IC3505	HY5DU281622ETPJ	IC		
IC3508	R1141Q331B-X	IC		
IC3509	RC4558D-X	IC		
IC3510	RC4558D-X	IC		
IC3511	RC4558D-X	IC		
IC3512	SC2595STRT-X	IC		
IC3513	SC2595STRT-X	IC		
IC3514	SC2595STRT-X	IC		
IC3701	AT89C51RD2RLTUM	IC		
IC3702	SN74LVC1G66V-X	IC		
IC3703	SN74LVC1G66V-X	IC		
IC3704	SN74AHCT1G08V-X	IC		
IC3751	CD74HC4053PW-X	IC		
IC3754	SN74LVC541APW-X	IC		
IC3755	SN74LVC1G66V-X	IC		
IC3756	SN74LVC1G66V-X	IC		
IC3757	SN74LVC1G66V-X	IC		
IC3758	SN74LVC1G66V-X	IC		
IC3901	SI-8511NVS-X	IC		
IC3902	PQ1CY1032Z-W	IC		
IC3903	BA80BC0WFP-X	IC		
IC3904	NJM79M08DL1A-X	IC		
IC3905	BA50BC0FP-X	IC		
IC3906	R1170H331B-X	IC		
IC3907	R1170H181B-X	IC		
IC3908	R1170H251B-X	IC		
IC3909	R1170H251B-X	IC		
IC3910	R1170H251B-X	IC		
IC3911	R1170H181B-X	IC		
IC3912	R1170H251B-X	IC		
IC3913	R1170H251B-X	IC		
IC3914	R1170H251B-X	IC		
IC3915	R1170H181B-X	IC		
IC3916	R1170H251B-X	IC		
IC3917	R1170H251B-X	IC		
IC3918	R1170H251B-X	IC		
IC3930	R1170H251B-X	IC		
IC3931	MM1701CH-X	IC		
IC8001	LM2941S-W	IC		
IC8002	PQ20WZ11-X	IC		
IC8003	PQ20WZ11-X	IC		
IC8005	SN74HCT32APW-X	IC		
Q3701	UN2211-X	TRANSISTOR		
Q3753	2SK1374-X	MOS FET		
Q3754	2SK1374-X	MOS FET		
Q3901	TPCA8003-H-X	POWER MOS FET		
Q3902	UN2211-X	TRANSISTOR		
Q3903	UN2211-X	TRANSISTOR		
Q3905	UN2211-X	TRANSISTOR		
Q3906	UN2211-X	TRANSISTOR		
Q3907	IMD14-W	TRANSISTOR		
Q3909	UPA2708GR-X	POWER MOS FET		
Q3910	UN2211-X	TRANSISTOR		
Q8001	2SC3928A/QR/-X	TRANSISTOR		
Q8004	2SC3928A/QR/-X	TRANSISTOR		
Q8005	2SC3928A/QR/-X	TRANSISTOR		
D3701	STZ6.8N-X	Z DIODE		
D3702	STZ6.8N-X	Z DIODE		
D3703	STZ6.8N-X	Z DIODE		
D3704	STZ6.8N-X	Z DIODE		
D3706	STZ6.8N-X	Z DIODE		
D3707	STZ6.8N-X	Z DIODE		
D3710	STZ6.8N-X	Z DIODE		
D3711	STZ6.8N-X	Z DIODE		
D3751	STZ6.8N-X	Z DIODE		
D3752	STZ6.8N-X	Z DIODE		
D3901	MA111-X	SI DIODE		
D3902	EC30HA03L-X	SB DIODE		
D3931	EC30HA03L-X	SB DIODE		
D3932	EC30HA03L-X	SB DIODE		
D8001	STZ6.8N-X	Z DIODE		
D8002	STZ6.8N-X	Z DIODE		
D8003	STZ6.8N-X	Z DIODE		
C3001	NCB10JK-106X	C CAPACITOR	10uF 6.3V K	
C3002	NCF31CZ-104X	C CAPACITOR	0.1uF 16V Z	
C3003	NCF31CZ-104X	C CAPACITOR	0.1uF 16V Z	
C3004	NCF31CZ-104X	C CAPACITOR	0.1uF 16V Z	
C3005	NCF31CZ-104X	C CAPACITOR	0.1uF 16V Z	
C3006	NCF31CZ-104X	C CAPACITOR	0.1uF 16V Z	
C3007	NCF31CZ-104X	C CAPACITOR	0.1uF 16V Z	
C3008	NCF31CZ-104X	C CAPACITOR	0.1uF 16V Z	
C3009	NCF31CZ-104X	C CAPACITOR	0.1uF 16V Z	
C3010	NCF31CZ-104X	C CAPACITOR	0.1uF 16V Z	
C3011	NCF31CZ-104X	C CAPACITOR	0.1uF 16V Z	
C3012	NCF31CZ-104X	C CAPACITOR	0.1uF 16V Z	

⚠Ref No.	Part No.	Part Name	Description	Local
C3013	NCF31CZ-104X	C CAPACITOR	0.1uF 16V Z	
C3014	NCF31CZ-104X	C CAPACITOR	0.1uF 16V Z	
C3015	NCF31CZ-104X	C CAPACITOR	0.1uF 16V Z	
C3016	NCB10JK-106X	C CAPACITOR	10uF 6.3V K	
C3017	NCF31CZ-104X	C CAPACITOR	0.1uF 16V Z	
C3018	NCF31CZ-104X	C CAPACITOR	0.1uF 16V Z	
C3019	NCF31CZ-104X	C CAPACITOR	0.1uF 16V Z	
C3020	NCF31CZ-104X	C CAPACITOR	0.1uF 16V Z	
C3021	NCF31CZ-104X	C CAPACITOR	0.1uF 16V Z	
C3022	NCF31CZ-104X	C CAPACITOR	0.1uF 16V Z	
C3023	NCF31CZ-104X	C CAPACITOR	0.1uF 16V Z	
C3024	NCF31CZ-104X	C CAPACITOR	0.1uF 16V Z	
C3025	NCF31CZ-104X	C CAPACITOR	0.1uF 16V Z	
C3026	NCF31CZ-104X	C CAPACITOR	0.1uF 16V Z	
C3027	NCF31CZ-104X	C CAPACITOR	0.1uF 16V Z	
C3028	NCF31CZ-104X	C CAPACITOR	0.1uF 16V Z	
C3029	NCF31CZ-104X	C CAPACITOR	0.1uF 16V Z	
C3030	NCF31CZ-104X	C CAPACITOR	0.1uF 16V Z	
C3031	NCF31CZ-104X	C CAPACITOR	0.1uF 16V Z	
C3032	NCF31CZ-104X	C CAPACITOR	0.1uF 16V Z	
C3033	NCF31CZ-104X	C CAPACITOR	0.1uF 16V Z	
C3034	NCF31CZ-104X	C CAPACITOR	0.1uF 16V Z	
C3035	NCF31CZ-104X	C CAPACITOR	0.1uF 16V Z	
C3036	NCF31CZ-104X	C CAPACITOR	0.1uF 16V Z	
C3037	NCF31CZ-104X	C CAPACITOR	0.1uF 16V Z	
C3038	NCF31CZ-104X	C CAPACITOR	0.1uF 16V Z	
C3039	NCF31CZ-104X	C CAPACITOR	0.1uF 16V Z	
C3040	NCF31CZ-104X	C CAPACITOR	0.1uF 16V Z	
C3041	NCF31CZ-104X	C CAPACITOR	0.1uF 16V Z	
C3042	NCF31CZ-104X	C CAPACITOR	0.1uF 16V Z	
C3043	NCF31CZ-104X	C CAPACITOR	0.1uF 16V Z	
C3044	NCF31CZ-104X	C CAPACITOR	0.1uF 16V Z	
C3045	NCF31CZ-104X	C CAPACITOR	0.1uF 16V Z	
C3046	NCF31CZ-104X	C CAPACITOR	0.1uF 16V Z	
C3047	NCF31CZ-104X	C CAPACITOR	0.1uF 16V Z	
C3048	NCF31CZ-104X	C CAPACITOR	0.1uF 16V Z	
C3049	NCF31CZ-104X	C CAPACITOR	0.1uF 16V Z	
C3050	NCF31CZ-104X	C CAPACITOR	0.1uF 16V Z	
C3051	NCB31HK-103X	C CAPACITOR	0.01uF 50V K	
C3052	NCF31CZ-104X	C CAPACITOR	0.1uF 16V Z	
C3053	NCB31HK-103X	C CAPACITOR	0.01uF 50V K	
C3054	NCF31CZ-104X	C CAPACITOR	0.1uF 16V Z	
C3055	NCB31HK-103X	C CAPACITOR	0.01uF 50V K	
C3056	NCF31CZ-104X	C CAPACITOR	0.1uF 16V Z	
C3057	NCB31HK-103X	C CAPACITOR	0.01uF 50V K	
C3058	NCF31CZ-104X	C CAPACITOR	0.1uF 16V Z	
C3059	NCF31CZ-104X	C CAPACITOR	0.1uF 16V Z	
C3060	NCF31CZ-104X	C CAPACITOR	0.1uF 16V Z	
C3061	NCF31CZ-104X	C CAPACITOR	0.1uF 16V Z	
C3062	NCF31CZ-104X	C CAPACITOR	0.1uF 16V Z	
C3063	NCF31CZ-104X	C CAPACITOR	0.1uF 16V Z	
C3064	NCF31CZ-104X	C CAPACITOR	0.1uF 16V Z	
C3065	NCF31CZ-104X	C CAPACITOR	0.1uF 16V Z	
C3066	NCF31CZ-104X	C CAPACITOR	0.1uF 16V Z	
C3067	NCB31HK-103X	C CAPACITOR	0.01uF 50V K	
C3068	NCF31CZ-104X	C CAPACITOR	0.1uF 16V Z	
C3069	NCF31CZ-104X	C CAPACITOR	0.1uF 16V Z	
C3070	NCB31HK-103X	C CAPACITOR	0.01uF 50V K	
C3071	NCF31CZ-104X	C CAPACITOR	0.1uF 16V Z	
C3072	NCF31CZ-104X	C CAPACITOR	0.1uF 16V Z	
C3073	NCB31HK-103X	C CAPACITOR	0.01uF 50V K	
C3074	NCF31CZ-104X	C CAPACITOR	0.1uF 16V Z	
C3075	NCF31CZ-104X	C CAPACITOR	0.1uF 16V Z	
C3076	NCB31HK-103X	C CAPACITOR	0.01uF 50V K	
C3077	NCF31CZ-104X	C CAPACITOR	0.1uF 16V Z	
C3078	NCB10JK-106X	C CAPACITOR	10uF 6.3V K	
C3079	NCF31CZ-104X	C CAPACITOR	0.1uF 16V Z	
C3080	NCF31CZ-104X	C CAPACITOR	0.1uF 16V Z	
C3081	NCF31CZ-104X	C CAPACITOR	0.1uF 16V Z	
C3082	NCF31CZ-104X	C CAPACITOR	0.1uF 16V Z	
C3083	NCB10JK-106X	C CAPACITOR	10uF 6.3V K	
C3084	NCF31CZ-104X	C CAPACITOR	0.1uF 16V Z	
C3085	NCF31CZ-104X	C CAPACITOR	0.1uF 16V Z	
C3086	NCF31CZ-104X	C CAPACITOR	0.1uF 16V Z	
C3087	NCF31CZ-104X	C CAPACITOR	0.1uF 16V Z	
C3088	NCF31CZ-104X	C CAPACITOR	0.1uF 16V Z	
C3089	NCB10JK-106X	C CAPACITOR	10uF 6.3V K	
C3090	NCF31CZ-104X	C CAPACITOR	0.1uF 16V Z	
C3091	NCF31CZ-104X	C CAPACITOR	0.1uF 16V Z	
C3092	NCF31CZ-104X	C CAPACITOR	0.1uF 16V Z	
C3093	NCF31CZ-104X	C CAPACITOR	0.1uF 16V Z	
C3094	NCF31CZ-104X	C CAPACITOR	0.1uF 16V Z	
C3095	NCF31CZ-104X	C CAPACITOR	0.1uF 16V Z	
C3096	NCF31CZ-104X	C CAPACITOR	0.1uF 16V Z	
C3097	NCF31CZ-104X	C CAPACITOR	0.1uF 16V Z	
C3101	NCF31CZ-104X	C CAPACITOR	0.1uF 16V Z	
C3102	NCF31CZ-104X	C CAPACITOR	0.1uF 16V Z	
C3103	NCF31CZ-104X	C CAPACITOR	0.1uF 16V Z	
C3104	NCF31CZ-104X	C CAPACITOR	0.1uF 16V Z	
C3105	NCF31CZ-104X	C CAPACITOR	0.1uF 16V Z	

⚠Ref No.	Part No.	Part Name	Description Local
C3106	NCF31CZ-104X	C CAPACITOR	0.1uF 16V Z
C3107	NCF31CZ-104X	C CAPACITOR	0.1uF 16V Z
C3108	NCF31CZ-104X	C CAPACITOR	0.1uF 16V Z
C3109	NCF31CZ-104X	C CAPACITOR	0.1uF 16V Z
C3110	NCF31CZ-104X	C CAPACITOR	0.1uF 16V Z
C3111	NCF31CZ-104X	C CAPACITOR	0.1uF 16V Z
C3112	NCF31CZ-104X	C CAPACITOR	0.1uF 16V Z
C3113	NCF31CZ-104X	C CAPACITOR	0.1uF 16V Z
C3114	NCF31CZ-104X	C CAPACITOR	0.1uF 16V Z
C3115	NCF31CZ-104X	C CAPACITOR	0.1uF 16V Z
C3116	NCF31CZ-104X	C CAPACITOR	0.1uF 16V Z
C3117	NBE40GM-227X	TA E CAPACITOR	220uF 4V M
C3118	NCF31CZ-104X	C CAPACITOR	0.1uF 16V Z
C3119	NCF31CZ-104X	C CAPACITOR	0.1uF 16V Z
C3120	NCF31CZ-104X	C CAPACITOR	0.1uF 16V Z
C3121	NCF31CZ-104X	C CAPACITOR	0.1uF 16V Z
C3122	NCF31CZ-104X	C CAPACITOR	0.1uF 16V Z
C3123	NCF31CZ-104X	C CAPACITOR	0.1uF 16V Z
C3124	NCF31CZ-104X	C CAPACITOR	0.1uF 16V Z
C3125	NCB31HK-103X	C CAPACITOR	0.01uF 50V K
C3126	NCF31CZ-104X	C CAPACITOR	0.1uF 16V Z
C3127	NCB31HK-103X	C CAPACITOR	0.01uF 50V K
C3128	NCF31CZ-104X	C CAPACITOR	0.1uF 16V Z
C3129	NCF31CZ-104X	C CAPACITOR	0.1uF 16V Z
C3130	NCF31CZ-104X	C CAPACITOR	0.1uF 16V Z
C3131	NCF31CZ-104X	C CAPACITOR	0.1uF 16V Z
C3132	NCF31CZ-104X	C CAPACITOR	0.1uF 16V Z
C3133	NCF31CZ-104X	C CAPACITOR	0.1uF 16V Z
C3134	NCF31CZ-104X	C CAPACITOR	0.1uF 16V Z
C3135	NCF31CZ-104X	C CAPACITOR	0.1uF 16V Z
C3136	NCF31CZ-104X	C CAPACITOR	0.1uF 16V Z
C3137	NCF31CZ-104X	C CAPACITOR	0.1uF 16V Z
C3138	NCF31CZ-104X	C CAPACITOR	0.1uF 16V Z
C3139	NCF31CZ-104X	C CAPACITOR	0.1uF 16V Z
C3140	NCF31CZ-104X	C CAPACITOR	0.1uF 16V Z
C3141	NCF31CZ-104X	C CAPACITOR	0.1uF 16V Z
C3142	NCF31CZ-104X	C CAPACITOR	0.1uF 16V Z
C3143	NCF31CZ-104X	C CAPACITOR	0.1uF 16V Z
C3144	NCF31CZ-104X	C CAPACITOR	0.1uF 16V Z
C3145	NCF31CZ-104X	C CAPACITOR	0.1uF 16V Z
C3146	NCF31CZ-104X	C CAPACITOR	0.1uF 16V Z
C3147	NCF31CZ-104X	C CAPACITOR	0.1uF 16V Z
C3148	NCF31CZ-104X	C CAPACITOR	0.1uF 16V Z
C3149	NCB31HK-103X	C CAPACITOR	0.01uF 50V K
C3150	NCF31CZ-104X	C CAPACITOR	0.1uF 16V Z
C3151	NCF31CZ-104X	C CAPACITOR	0.1uF 16V Z
C3152	NCB31HK-103X	C CAPACITOR	0.01uF 50V K
C3153	NCF31CZ-104X	C CAPACITOR	0.1uF 16V Z
C3154	NCF31CZ-104X	C CAPACITOR	0.1uF 16V Z
C3155	NCF31CZ-104X	C CAPACITOR	0.1uF 16V Z
C3156	NCF31CZ-104X	C CAPACITOR	0.1uF 16V Z
C3157	NCF31CZ-104X	C CAPACITOR	0.1uF 16V Z
C3158	NCF31CZ-104X	C CAPACITOR	0.1uF 16V Z
C3159	NCF31CZ-104X	C CAPACITOR	0.1uF 16V Z
C3160	NCF31CZ-104X	C CAPACITOR	0.1uF 16V Z
C3161	NCF31CZ-104X	C CAPACITOR	0.1uF 16V Z
C3162	NCF31CZ-104X	C CAPACITOR	0.1uF 16V Z
C3163	NCF31CZ-104X	C CAPACITOR	0.1uF 16V Z
C3164	NCF31CZ-104X	C CAPACITOR	0.1uF 16V Z
C3165	NCF31CZ-104X	C CAPACITOR	0.1uF 16V Z
C3166	NCF31CZ-104X	C CAPACITOR	0.1uF 16V Z
C3167	NCF31CZ-104X	C CAPACITOR	0.1uF 16V Z
C3168	NCF31CZ-104X	C CAPACITOR	0.1uF 16V Z
C3169	NCF31CZ-104X	C CAPACITOR	0.1uF 16V Z
C3170	NCF31CZ-104X	C CAPACITOR	0.1uF 16V Z
C3171	NCF31CZ-104X	C CAPACITOR	0.1uF 16V Z
C3172	NCF31CZ-104X	C CAPACITOR	0.1uF 16V Z
C3173	NCF31CZ-104X	C CAPACITOR	0.1uF 16V Z
C3174	NCF31CZ-104X	C CAPACITOR	0.1uF 16V Z
C3175	NCF31CZ-104X	C CAPACITOR	0.1uF 16V Z
C3176	NCF31CZ-104X	C CAPACITOR	0.1uF 16V Z
C3177	NCF31CZ-104X	C CAPACITOR	0.1uF 16V Z
C3178	NCF31CZ-104X	C CAPACITOR	0.1uF 16V Z
C3179	NCF31CZ-104X	C CAPACITOR	0.1uF 16V Z
C3180	NCF31CZ-104X	C CAPACITOR	0.1uF 16V Z
C3181	NCF31CZ-104X	C CAPACITOR	0.1uF 16V Z
C3182	NCF31CZ-104X	C CAPACITOR	0.1uF 16V Z
C3183	NCF31CZ-104X	C CAPACITOR	0.1uF 16V Z
C3184	NCF31CZ-104X	C CAPACITOR	0.1uF 16V Z
C3185	NCF31CZ-104X	C CAPACITOR	0.1uF 16V Z
C3186	NCF31CZ-104X	C CAPACITOR	0.1uF 16V Z
C3187	NCF31CZ-104X	C CAPACITOR	0.1uF 16V Z
C3188	NBE40GM-227X	TA E CAPACITOR	220uF 4V M
C3189	NCF31CZ-104X	C CAPACITOR	0.1uF 16V Z
C3190	NCF31CZ-104X	C CAPACITOR	0.1uF 16V Z
C3191	NCF31CZ-104X	C CAPACITOR	0.1uF 16V Z
C3192	NCF31CZ-104X	C CAPACITOR	0.1uF 16V Z
C3193	NCF31CZ-104X	C CAPACITOR	0.1uF 16V Z
C3194	NCF31CZ-104X	C CAPACITOR	0.1uF 16V Z
C3195	NCF31CZ-104X	C CAPACITOR	0.1uF 16V Z
C3196	NCB31HK-103X	C CAPACITOR	0.01uF 50V K
C3197	NCF31CZ-104X	C CAPACITOR	0.1uF 16V Z
C3198	NCB31HK-103X	C CAPACITOR	0.01uF 50V K
C3199	NBE40JM-476X	TA E CAPACITOR	47uF 6.3V M
C3200	NCF31CZ-104X	C CAPACITOR	0.1uF 16V Z
C3201	NCF31CZ-104X	C CAPACITOR	0.1uF 16V Z
C3202	NCF31CZ-104X	C CAPACITOR	0.1uF 16V Z
C3203	NCF31CZ-104X	C CAPACITOR	0.1uF 16V Z
C3204	NBE40GM-227X	TA E CAPACITOR	220uF 4V M
C3205	NCF31CZ-104X	C CAPACITOR	0.1uF 16V Z
C3206	NCF31CZ-104X	C CAPACITOR	0.1uF 16V Z
C3207	NCB31HK-103X	C CAPACITOR	0.01uF 50V K
C3208	NCF31CZ-104X	C CAPACITOR	0.1uF 16V Z
C3209	NCB31HK-103X	C CAPACITOR	0.01uF 50V K
C3210	NCF31CZ-104X	C CAPACITOR	0.1uF 16V Z
C3211	NCF31CZ-104X	C CAPACITOR	0.1uF 16V Z
C3212	NCF31CZ-104X	C CAPACITOR	0.1uF 16V Z
C3213	NCF31CZ-104X	C CAPACITOR	0.1uF 16V Z
C3214	NCF31CZ-104X	C CAPACITOR	0.1uF 16V Z
C3219	NCB10JK-106X	C CAPACITOR	10uF 6.3V K
C3220	NCF31CZ-104X	C CAPACITOR	0.1uF 16V Z
C3221	NCF31CZ-104X	C CAPACITOR	0.1uF 16V Z
C3222	NCB10JK-106X	C CAPACITOR	10uF 6.3V K
C3223	NBE40JM-476X	TA E CAPACITOR	47uF 6.3V M
C3224	NCF31CZ-104X	C CAPACITOR	0.1uF 16V Z
C3225	NCF31CZ-104X	C CAPACITOR	0.1uF 16V Z
C3226	NCF31CZ-104X	C CAPACITOR	0.1uF 16V Z
C3227	NCF31CZ-104X	C CAPACITOR	0.1uF 16V Z
C3228	NEZ0032-106X	E CAPACITOR	10uF
C3229	NEZ0032-106X	E CAPACITOR	10uF
C3230	NCF31CZ-104X	C CAPACITOR	0.1uF 16V Z
C3231	NCF31CZ-104X	C CAPACITOR	0.1uF 16V Z
C3232	NCF31CZ-104X	C CAPACITOR	0.1uF 16V Z
C3233	NCB21AK-105X	C CAPACITOR	1uF 10V K
C3234	NBE40JM-476X	TA E CAPACITOR	47uF 6.3V M
C3235	NCF31CZ-104X	C CAPACITOR	0.1uF 16V Z
C3236	NCF31CZ-104X	C CAPACITOR	0.1uF 16V Z
C3237	NCF31CZ-104X	C CAPACITOR	0.1uF 16V Z
C3238	NBE40JM-476X	TA E CAPACITOR	47uF 6.3V M
C3239	NCF31CZ-104X	C CAPACITOR	0.1uF 16V Z
C3240	NCF31CZ-104X	C CAPACITOR	0.1uF 16V Z
C3241	NCF31CZ-104X	C CAPACITOR	0.1uF 16V Z
C3242	NBE40JM-476X	TA E CAPACITOR	47uF 6.3V M
C3243	NCF31CZ-104X	C CAPACITOR	0.1uF 16V Z
C3244	NCF31CZ-104X	C CAPACITOR	0.1uF 16V Z
C3245	NCF31CZ-104X	C CAPACITOR	0.1uF 16V Z
C3246	NCF31CZ-104X	C CAPACITOR	0.1uF 16V Z
C3247	NCF31CZ-104X	C CAPACITOR	0.1uF 16V Z
C3248	NBE20GM-336X	TA E CAPACITOR	33uF 4V M
C3301	NCF31CZ-104X	C CAPACITOR	0.1uF 16V Z
C3302	NCF31CZ-104X	C CAPACITOR	0.1uF 16V Z
C3303	NCF31CZ-104X	C CAPACITOR	0.1uF 16V Z
C3304	NCF31CZ-104X	C CAPACITOR	0.1uF 16V Z
C3305	NCF31CZ-104X	C CAPACITOR	0.1uF 16V Z
C3306	NCF31CZ-104X	C CAPACITOR	0.1uF 16V Z
C3307	NCF31CZ-104X	C CAPACITOR	0.1uF 16V Z
C3308	NCF31CZ-104X	C CAPACITOR	0.1uF 16V Z
C3309	NCF31CZ-104X	C CAPACITOR	0.1uF 16V Z
C3310	NCF31CZ-104X	C CAPACITOR	0.1uF 16V Z
C3311	NCF31CZ-104X	C CAPACITOR	0.1uF 16V Z
C3312	NCF31CZ-104X	C CAPACITOR	0.1uF 16V Z
C3313	NCF31CZ-104X	C CAPACITOR	0.1uF 16V Z
C3314	NCF31CZ-104X	C CAPACITOR	0.1uF 16V Z
C3315	NCF31CZ-104X	C CAPACITOR	0.1uF 16V Z
C3316	NCF31CZ-104X	C CAPACITOR	0.1uF 16V Z
C3317	NBE40GM-227X	TA E CAPACITOR	220uF 4V M
C3318	NCF31CZ-104X	C CAPACITOR	0.1uF 16V Z
C3319	NCF31CZ-104X	C CAPACITOR	0.1uF 16V Z
C3320	NCF31CZ-104X	C CAPACITOR	0.1uF 16V Z
C3321	NCF31CZ-104X	C CAPACITOR	0.1uF 16V Z
C3322	NCF31CZ-104X	C CAPACITOR	0.1uF 16V Z
C3323	NCF31CZ-104X	C CAPACITOR	0.1uF 16V Z
C3324	NCF31CZ-104X	C CAPACITOR	0.1uF 16V Z
C3325	NCB31HK-103X	C CAPACITOR	0.01uF 50V K
C3326	NCF31CZ-104X	C CAPACITOR	0.1uF 16V Z
C3327	NCB31HK-103X	C CAPACITOR	0.01uF 50V K
C3328	NCF31CZ-104X	C CAPACITOR	0.1uF 16V Z
C3329	NCF31CZ-104X	C CAPACITOR	0.1uF 16V Z
C3330	NCF31CZ-104X	C CAPACITOR	0.1uF 16V Z
C3331	NCF31CZ-104X	C CAPACITOR	0.1uF 16V Z
C3332	NCF31CZ-104X	C CAPACITOR	0.1uF 16V Z
C3333	NCF31CZ-104X	C CAPACITOR	0.1uF 16V Z
C3334	NCF31CZ-104X	C CAPACITOR	0.1uF 16V Z
C3335	NCF31CZ-104X	C CAPACITOR	0.1uF 16V Z
C3336	NCF31CZ-104X	C CAPACITOR	0.1uF 16V Z
C3337	NCF31CZ-104X	C CAPACITOR	0.1uF 16V Z
C3338	NCF31CZ-104X	C CAPACITOR	0.1uF 16V Z
C3339	NCF31CZ-104X	C CAPACITOR	0.1uF 16V Z
C3340	NCF31CZ-104X	C CAPACITOR	0.1uF 16V Z
C3341	NCF31CZ-104X	C CAPACITOR	0.1uF 16V Z

⚠Ref No.	Part No.	Part Name	Description Local
C3342	NCF31CZ-104X	C CAPACITOR	0.1uF 16V Z
C3343	NCF31CZ-104X	C CAPACITOR	0.1uF 16V Z
C3344	NCF31CZ-104X	C CAPACITOR	0.1uF 16V Z
C3345	NCF31CZ-104X	C CAPACITOR	0.1uF 16V Z
C3346	NCF31CZ-104X	C CAPACITOR	0.1uF 16V Z
C3347	NCF31CZ-104X	C CAPACITOR	0.1uF 16V Z
C3348	NCF31CZ-104X	C CAPACITOR	0.1uF 16V Z
C3349	NCB31HK-103X	C CAPACITOR	0.01uF 50V K
C3350	NCF31CZ-104X	C CAPACITOR	0.1uF 16V Z
C3351	NCF31CZ-104X	C CAPACITOR	0.1uF 16V Z
C3352	NCB31HK-103X	C CAPACITOR	0.01uF 50V K
C3353	NCF31CZ-104X	C CAPACITOR	0.1uF 16V Z
C3354	NCF31CZ-104X	C CAPACITOR	0.1uF 16V Z
C3355	NCF31CZ-104X	C CAPACITOR	0.1uF 16V Z
C3356	NCF31CZ-104X	C CAPACITOR	0.1uF 16V Z
C3357	NCF31CZ-104X	C CAPACITOR	0.1uF 16V Z
C3358	NCF31CZ-104X	C CAPACITOR	0.1uF 16V Z
C3359	NCF31CZ-104X	C CAPACITOR	0.1uF 16V Z
C3360	NCF31CZ-104X	C CAPACITOR	0.1uF 16V Z
C3361	NCF31CZ-104X	C CAPACITOR	0.1uF 16V Z
C3362	NCF31CZ-104X	C CAPACITOR	0.1uF 16V Z
C3363	NCF31CZ-104X	C CAPACITOR	0.1uF 16V Z
C3364	NCF31CZ-104X	C CAPACITOR	0.1uF 16V Z
C3365	NCF31CZ-104X	C CAPACITOR	0.1uF 16V Z
C3366	NCF31CZ-104X	C CAPACITOR	0.1uF 16V Z
C3367	NCF31CZ-104X	C CAPACITOR	0.1uF 16V Z
C3368	NCF31CZ-104X	C CAPACITOR	0.1uF 16V Z
C3369	NCF31CZ-104X	C CAPACITOR	0.1uF 16V Z
C3370	NCF31CZ-104X	C CAPACITOR	0.1uF 16V Z
C3371	NCF31CZ-104X	C CAPACITOR	0.1uF 16V Z
C3372	NCF31CZ-104X	C CAPACITOR	0.1uF 16V Z
C3373	NCF31CZ-104X	C CAPACITOR	0.1uF 16V Z
C3374	NCF31CZ-104X	C CAPACITOR	0.1uF 16V Z
C3375	NCF31CZ-104X	C CAPACITOR	0.1uF 16V Z
C3376	NCF31CZ-104X	C CAPACITOR	0.1uF 16V Z
C3377	NCF31CZ-104X	C CAPACITOR	0.1uF 16V Z
C3378	NCF31CZ-104X	C CAPACITOR	0.1uF 16V Z
C3379	NCF31CZ-104X	C CAPACITOR	0.1uF 16V Z
C3380	NCF31CZ-104X	C CAPACITOR	0.1uF 16V Z
C3381	NCF31CZ-104X	C CAPACITOR	0.1uF 16V Z
C3382	NCF31CZ-104X	C CAPACITOR	0.1uF 16V Z
C3383	NCF31CZ-104X	C CAPACITOR	0.1uF 16V Z
C3384	NCF31CZ-104X	C CAPACITOR	0.1uF 16V Z
C3385	NCF31CZ-104X	C CAPACITOR	0.1uF 16V Z
C3386	NCF31CZ-104X	C CAPACITOR	0.1uF 16V Z
C3387	NCF31CZ-104X	C CAPACITOR	0.1uF 16V Z
C3388	NBE40GM-227X	TA E CAPACITOR	220uF 4V M
C3389	NCF31CZ-104X	C CAPACITOR	0.1uF 16V Z
C3390	NCF31CZ-104X	C CAPACITOR	0.1uF 16V Z
C3391	NCF31CZ-104X	C CAPACITOR	0.1uF 16V Z
C3392	NCF31CZ-104X	C CAPACITOR	0.1uF 16V Z
C3393	NCF31CZ-104X	C CAPACITOR	0.1uF 16V Z
C3394	NCF31CZ-104X	C CAPACITOR	0.1uF 16V Z
C3395	NCF31CZ-104X	C CAPACITOR	0.1uF 16V Z
C3396	NCB31HK-103X	C CAPACITOR	0.01uF 50V K
C3397	NCF31CZ-104X	C CAPACITOR	0.1uF 16V Z
C3398	NCB31HK-103X	C CAPACITOR	0.01uF 50V K
C3399	NBE40JM-476X	TA E CAPACITOR	47uF 6.3V M
C3400	NCF31CZ-104X	C CAPACITOR	0.1uF 16V Z
C3401	NCF31CZ-104X	C CAPACITOR	0.1uF 16V Z
C3402	NCF31CZ-104X	C CAPACITOR	0.1uF 16V Z
C3403	NCF31CZ-104X	C CAPACITOR	0.1uF 16V Z
C3404	NBE40GM-227X	TA E CAPACITOR	220uF 4V M
C3405	NCF31CZ-104X	C CAPACITOR	0.1uF 16V Z
C3406	NCF31CZ-104X	C CAPACITOR	0.1uF 16V Z
C3407	NCB31HK-103X	C CAPACITOR	0.01uF 50V K
C3408	NCF31CZ-104X	C CAPACITOR	0.1uF 16V Z
C3409	NCB31HK-103X	C CAPACITOR	0.01uF 50V K
C3410	NCF31CZ-104X	C CAPACITOR	0.1uF 16V Z
C3411	NCF31CZ-104X	C CAPACITOR	0.1uF 16V Z
C3412	NCF31CZ-104X	C CAPACITOR	0.1uF 16V Z
C3413	NCF31CZ-104X	C CAPACITOR	0.1uF 16V Z
C3414	NCF31CZ-104X	C CAPACITOR	0.1uF 16V Z
C3416	NDC31HJ-180X	C CAPACITOR	18pF 50V J
C3417	NDC31HJ-180X	C CAPACITOR	18pF 50V J
C3418	NCF31CZ-104X	C CAPACITOR	0.1uF 16V Z
C3421	NCF31CZ-104X	C CAPACITOR	0.1uF 16V Z
C3422	NCB10JK-106X	C CAPACITOR	10uF 6.3V K
C3423	NBE40JM-476X	TA E CAPACITOR	47uF 6.3V M
C3424	NCF31CZ-104X	C CAPACITOR	0.1uF 16V Z
C3425	NCF31CZ-104X	C CAPACITOR	0.1uF 16V Z
C3426	NCF31CZ-104X	C CAPACITOR	0.1uF 16V Z
C3427	NCF31CZ-104X	C CAPACITOR	0.1uF 16V Z
C3428	NEZ0032-106X	E CAPACITOR	10uF
C3429	NEZ0032-106X	E CAPACITOR	10uF
C3430	NCF31CZ-104X	C CAPACITOR	0.1uF 16V Z
C3431	NCF31CZ-104X	C CAPACITOR	0.1uF 16V Z
C3432	NCF31CZ-104X	C CAPACITOR	0.1uF 16V Z
C3433	NCB21AK-105X	C CAPACITOR	1uF 10V K
C3434	NBE40JM-476X	TA E CAPACITOR	47uF 6.3V M
C3435	NCF31CZ-104X	C CAPACITOR	0.1uF 16V Z
C3436	NCF31CZ-104X	C CAPACITOR	0.1uF 16V Z
C3437	NCF31CZ-104X	C CAPACITOR	0.1uF 16V Z
C3438	NBE40JM-476X	TA E CAPACITOR	47uF 6.3V M
C3439	NCF31CZ-104X	C CAPACITOR	0.1uF 16V Z
C3440	NCF31CZ-104X	C CAPACITOR	0.1uF 16V Z
C3441	NCF31CZ-104X	C CAPACITOR	0.1uF 16V Z
C3442	NBE40JM-476X	TA E CAPACITOR	47uF 6.3V M
C3443	NCF31CZ-104X	C CAPACITOR	0.1uF 16V Z
C3444	NCF31CZ-104X	C CAPACITOR	0.1uF 16V Z
C3445	NCF31CZ-104X	C CAPACITOR	0.1uF 16V Z
C3446	NCF31CZ-104X	C CAPACITOR	0.1uF 16V Z
C3447	NCF31CZ-104X	C CAPACITOR	0.1uF 16V Z
C3448	NBE20GM-336X	TA E CAPACITOR	33uF 4V M
C3501	NCF31CZ-104X	C CAPACITOR	0.1uF 16V Z
C3502	NCF31CZ-104X	C CAPACITOR	0.1uF 16V Z
C3503	NCF31CZ-104X	C CAPACITOR	0.1uF 16V Z
C3504	NCF31CZ-104X	C CAPACITOR	0.1uF 16V Z
C3505	NCF31CZ-104X	C CAPACITOR	0.1uF 16V Z
C3506	NCF31CZ-104X	C CAPACITOR	0.1uF 16V Z
C3507	NCF31CZ-104X	C CAPACITOR	0.1uF 16V Z
C3508	NCF31CZ-104X	C CAPACITOR	0.1uF 16V Z
C3509	NCF31CZ-104X	C CAPACITOR	0.1uF 16V Z
C3510	NCF31CZ-104X	C CAPACITOR	0.1uF 16V Z
C3511	NCF31CZ-104X	C CAPACITOR	0.1uF 16V Z
C3512	NCF31CZ-104X	C CAPACITOR	0.1uF 16V Z
C3513	NCF31CZ-104X	C CAPACITOR	0.1uF 16V Z
C3514	NCF31CZ-104X	C CAPACITOR	0.1uF 16V Z
C3515	NCF31CZ-104X	C CAPACITOR	0.1uF 16V Z
C3516	NCF31CZ-104X	C CAPACITOR	0.1uF 16V Z
C3517	NBE40GM-227X	TA E CAPACITOR	220uF 4V M
C3518	NCF31CZ-104X	C CAPACITOR	0.1uF 16V Z
C3519	NCF31CZ-104X	C CAPACITOR	0.1uF 16V Z
C3520	NCF31CZ-104X	C CAPACITOR	0.1uF 16V Z
C3521	NCF31CZ-104X	C CAPACITOR	0.1uF 16V Z
C3522	NCF31CZ-104X	C CAPACITOR	0.1uF 16V Z
C3523	NCF31CZ-104X	C CAPACITOR	0.1uF 16V Z
C3524	NCF31CZ-104X	C CAPACITOR	0.1uF 16V Z
C3525	NCB31HK-103X	C CAPACITOR	0.01uF 50V K
C3526	NCF31CZ-104X	C CAPACITOR	0.1uF 16V Z
C3527	NCB31HK-103X	C CAPACITOR	0.01uF 50V K
C3528	NCF31CZ-104X	C CAPACITOR	0.1uF 16V Z
C3529	NCF31CZ-104X	C CAPACITOR	0.1uF 16V Z
C3530	NCF31CZ-104X	C CAPACITOR	0.1uF 16V Z
C3531	NCF31CZ-104X	C CAPACITOR	0.1uF 16V Z
C3532	NCF31CZ-104X	C CAPACITOR	0.1uF 16V Z
C3533	NCF31CZ-104X	C CAPACITOR	0.1uF 16V Z
C3534	NCF31CZ-104X	C CAPACITOR	0.1uF 16V Z
C3535	NCF31CZ-104X	C CAPACITOR	0.1uF 16V Z
C3536	NCF31CZ-104X	C CAPACITOR	0.1uF 16V Z
C3537	NCF31CZ-104X	C CAPACITOR	0.1uF 16V Z
C3538	NCF31CZ-104X	C CAPACITOR	0.1uF 16V Z
C3539	NCF31CZ-104X	C CAPACITOR	0.1uF 16V Z
C3540	NCF31CZ-104X	C CAPACITOR	0.1uF 16V Z
C3541	NCF31CZ-104X	C CAPACITOR	0.1uF 16V Z
C3542	NCF31CZ-104X	C CAPACITOR	0.1uF 16V Z
C3543	NCF31CZ-104X	C CAPACITOR	0.1uF 16V Z
C3544	NCF31CZ-104X	C CAPACITOR	0.1uF 16V Z
C3545	NCF31CZ-104X	C CAPACITOR	0.1uF 16V Z
C3546	NCF31CZ-104X	C CAPACITOR	0.1uF 16V Z
C3547	NCF31CZ-104X	C CAPACITOR	0.1uF 16V Z
C3548	NCF31CZ-104X	C CAPACITOR	0.1uF 16V Z
C3549	NCB31HK-103X	C CAPACITOR	0.01uF 50V K
C3550	NCF31CZ-104X	C CAPACITOR	0.1uF 16V Z
C3551	NCF31CZ-104X	C CAPACITOR	0.1uF 16V Z
C3552	NCB31HK-103X	C CAPACITOR	0.01uF 50V K
C3553	NCF31CZ-104X	C CAPACITOR	0.1uF 16V Z
C3554	NCF31CZ-104X	C CAPACITOR	0.1uF 16V Z
C3555	NCF31CZ-104X	C CAPACITOR	0.1uF 16V Z
C3556	NCF31CZ-104X	C CAPACITOR	0.1uF 16V Z
C3557	NCF31CZ-104X	C CAPACITOR	0.1uF 16V Z
C3558	NCF31CZ-104X	C CAPACITOR	0.1uF 16V Z
C3559	NCF31CZ-104X	C CAPACITOR	0.1uF 16V Z
C3560	NCF31CZ-104X	C CAPACITOR	0.1uF 16V Z
C3561	NCF31CZ-104X	C CAPACITOR	0.1uF 16V Z
C3562	NCF31CZ-104X	C CAPACITOR	0.1uF 16V Z
C3563	NCF31CZ-104X	C CAPACITOR	0.1uF 16V Z
C3564	NCF31CZ-104X	C CAPACITOR	0.1uF 16V Z
C3565	NCF31CZ-104X	C CAPACITOR	0.1uF 16V Z
C3566	NCF31CZ-104X	C CAPACITOR	0.1uF 16V Z
C3567	NCF31CZ-104X	C CAPACITOR	0.1uF 16V Z
C3568	NCF31CZ-104X	C CAPACITOR	0.1uF 16V Z
C3569	NCF31CZ-104X	C CAPACITOR	0.1uF 16V Z
C3570	NCF31CZ-104X	C CAPACITOR	0.1uF 16V Z
C3571	NCF31CZ-104X	C CAPACITOR	0.1uF 16V Z
C3572	NCF31CZ-104X	C CAPACITOR	0.1uF 16V Z
C3573	NCF31CZ-104X	C CAPACITOR	0.1uF 16V Z
C3574	NCF31CZ-104X	C CAPACITOR	0.1uF 16V Z
C3575	NCF31CZ-104X	C CAPACITOR	0.1uF 16V Z
C3576	NCF31CZ-104X	C CAPACITOR	0.1uF 16V Z

⚠Ref No.	Part No.	Part Name	Description Local
C3577	NCF31CZ-104X	C CAPACITOR	0.1uF 16V Z
C3578	NCF31CZ-104X	C CAPACITOR	0.1uF 16V Z
C3579	NCF31CZ-104X	C CAPACITOR	0.1uF 16V Z
C3580	NCF31CZ-104X	C CAPACITOR	0.1uF 16V Z
C3581	NCF31CZ-104X	C CAPACITOR	0.1uF 16V Z
C3582	NCF31CZ-104X	C CAPACITOR	0.1uF 16V Z
C3583	NCF31CZ-104X	C CAPACITOR	0.1uF 16V Z
C3584	NCF31CZ-104X	C CAPACITOR	0.1uF 16V Z
C3585	NCF31CZ-104X	C CAPACITOR	0.1uF 16V Z
C3586	NCF31CZ-104X	C CAPACITOR	0.1uF 16V Z
C3587	NCF31CZ-104X	C CAPACITOR	0.1uF 16V Z
C3588	NBE40GM-227X	TA E CAPACITOR	220uF 4V M
C3589	NCF31CZ-104X	C CAPACITOR	0.1uF 16V Z
C3590	NCF31CZ-104X	C CAPACITOR	0.1uF 16V Z
C3591	NCF31CZ-104X	C CAPACITOR	0.1uF 16V Z
C3592	NCF31CZ-104X	C CAPACITOR	0.1uF 16V Z
C3593	NCF31CZ-104X	C CAPACITOR	0.1uF 16V Z
C3594	NCF31CZ-104X	C CAPACITOR	0.1uF 16V Z
C3595	NCF31CZ-104X	C CAPACITOR	0.1uF 16V Z
C3596	NCB31HK-103X	C CAPACITOR	0.01uF 50V K
C3597	NCF31CZ-104X	C CAPACITOR	0.1uF 16V Z
C3598	NCB31HK-103X	C CAPACITOR	0.01uF 50V K
C3599	NBE40JM-476X	TA E CAPACITOR	47uF 6.3V M
C3600	NCF31CZ-104X	C CAPACITOR	0.1uF 16V Z
C3601	NCF31CZ-104X	C CAPACITOR	0.1uF 16V Z
C3602	NCF31CZ-104X	C CAPACITOR	0.1uF 16V Z
C3603	NCF31CZ-104X	C CAPACITOR	0.1uF 16V Z
C3604	NBE40GM-227X	TA E CAPACITOR	220uF 4V M
C3605	NCF31CZ-104X	C CAPACITOR	0.1uF 16V Z
C3606	NCF31CZ-104X	C CAPACITOR	0.1uF 16V Z
C3607	NCB31HK-103X	C CAPACITOR	0.01uF 50V K
C3608	NCF31CZ-104X	C CAPACITOR	0.1uF 16V Z
C3609	NCB31HK-103X	C CAPACITOR	0.01uF 50V K
C3610	NCF31CZ-104X	C CAPACITOR	0.1uF 16V Z
C3611	NCF31CZ-104X	C CAPACITOR	0.1uF 16V Z
C3612	NCF31CZ-104X	C CAPACITOR	0.1uF 16V Z
C3613	NCF31CZ-104X	C CAPACITOR	0.1uF 16V Z
C3614	NCF31CZ-104X	C CAPACITOR	0.1uF 16V Z
C3621	NCF31CZ-104X	C CAPACITOR	0.1uF 16V Z
C3622	NCB10JK-106X	C CAPACITOR	10uF 6.3V K
C3623	NBE40JM-476X	TA E CAPACITOR	47uF 6.3V M
C3624	NCF31CZ-104X	C CAPACITOR	0.1uF 16V Z
C3625	NCF31CZ-104X	C CAPACITOR	0.1uF 16V Z
C3626	NCF31CZ-104X	C CAPACITOR	0.1uF 16V Z
C3627	NCF31CZ-104X	C CAPACITOR	0.1uF 16V Z
C3628	NEZ0032-106X	E CAPACITOR	10uF
C3629	NEZ0032-106X	E CAPACITOR	10uF
C3630	NCF31CZ-104X	C CAPACITOR	0.1uF 16V Z
C3631	NCF31CZ-104X	C CAPACITOR	0.1uF 16V Z
C3632	NCF31CZ-104X	C CAPACITOR	0.1uF 16V Z
C3633	NCB21AK-105X	C CAPACITOR	1uF 10V K
C3634	NBE40JM-476X	TA E CAPACITOR	47uF 6.3V M
C3635	NCF31CZ-104X	C CAPACITOR	0.1uF 16V Z
C3636	NCF31CZ-104X	C CAPACITOR	0.1uF 16V Z
C3637	NCF31CZ-104X	C CAPACITOR	0.1uF 16V Z
C3638	NBE40JM-476X	TA E CAPACITOR	47uF 6.3V M
C3639	NCF31CZ-104X	C CAPACITOR	0.1uF 16V Z
C3640	NCF31CZ-104X	C CAPACITOR	0.1uF 16V Z
C3641	NCF31CZ-104X	C CAPACITOR	0.1uF 16V Z
C3642	NBE40JM-476X	TA E CAPACITOR	47uF 6.3V M
C3643	NCF31CZ-104X	C CAPACITOR	0.1uF 16V Z
C3644	NCF31CZ-104X	C CAPACITOR	0.1uF 16V Z
C3645	NCF31CZ-104X	C CAPACITOR	0.1uF 16V Z
C3648	NBE20GM-336X	TA E CAPACITOR	33uF 4V M
C3666	NCF31CZ-104X	C CAPACITOR	0.1uF 16V Z
C3667	NCF31CZ-104X	C CAPACITOR	0.1uF 16V Z
C3701	NEZ0032-476X	E CAPACITOR	47uF
C3702	NCF31CZ-104X	C CAPACITOR	0.1uF 16V Z
C3703	NEZ0032-106X	E CAPACITOR	10uF
C3704	NDC31HJ-3R0X	C CAPACITOR	3pF 50V J
C3705	NDC31HJ-3R0X	C CAPACITOR	3pF 50V J
C3706	NCF31CZ-104X	C CAPACITOR	0.1uF 16V Z
C3707	NEZ0032-106X	E CAPACITOR	10uF
C3708	NCF31CZ-104X	C CAPACITOR	0.1uF 16V Z
C3709	NCF31CZ-104X	C CAPACITOR	0.1uF 16V Z
C3710	NCF31CZ-104X	C CAPACITOR	0.1uF 16V Z
C3716	NCB31HK-102X	C CAPACITOR	1000pF 50V K
C3729	NCF31CZ-104X	C CAPACITOR	0.1uF 16V Z
C3751	NCF31CZ-104X	C CAPACITOR	0.1uF 16V Z
C3752	NCF31CZ-104X	C CAPACITOR	0.1uF 16V Z
C3754	NCF31CZ-104X	C CAPACITOR	0.1uF 16V Z
C3756	NCF31CZ-104X	C CAPACITOR	0.1uF 16V Z
C3757	NCF31CZ-104X	C CAPACITOR	0.1uF 16V Z
C3758	NCF31CZ-104X	C CAPACITOR	0.1uF 16V Z
C3759	NCF31CZ-104X	C CAPACITOR	0.1uF 16V Z
C3760	NCF31CZ-104X	C CAPACITOR	0.1uF 16V Z
C3761	NCF31CZ-104X	C CAPACITOR	0.1uF 16V Z
C3763	NCB21AK-105X	C CAPACITOR	1uF 10V K
C3801	NCF31CZ-104X	C CAPACITOR	0.1uF 16V Z
C3802	NCF31CZ-104X	C CAPACITOR	0.1uF 16V Z

⚠Ref No.	Part No.	Part Name	Description Local
C3803	NCF31CZ-104X	C CAPACITOR	0.1uF 16V Z
C3804	NCF31CZ-104X	C CAPACITOR	0.1uF 16V Z
C3805	NCF31CZ-104X	C CAPACITOR	0.1uF 16V Z
C3806	NCF31CZ-104X	C CAPACITOR	0.1uF 16V Z
C3807	NCF31CZ-104X	C CAPACITOR	0.1uF 16V Z
C3808	NCF31CZ-104X	C CAPACITOR	0.1uF 16V Z
C3809	NCF31CZ-104X	C CAPACITOR	0.1uF 16V Z
C3810	NCF31CZ-104X	C CAPACITOR	0.1uF 16V Z
C3811	NCF31CZ-104X	C CAPACITOR	0.1uF 16V Z
C3812	NCF31CZ-104X	C CAPACITOR	0.1uF 16V Z
C3813	NCF31CZ-104X	C CAPACITOR	0.1uF 16V Z
C3814	NCF31CZ-104X	C CAPACITOR	0.1uF 16V Z
C3815	NCF31CZ-104X	C CAPACITOR	0.1uF 16V Z
C3816	NCF31CZ-104X	C CAPACITOR	0.1uF 16V Z
C3817	NCF31CZ-104X	C CAPACITOR	0.1uF 16V Z
C3818	NCF31CZ-104X	C CAPACITOR	0.1uF 16V Z
C3819	NCF31CZ-104X	C CAPACITOR	0.1uF 16V Z
C3820	NCF31CZ-104X	C CAPACITOR	0.1uF 16V Z
C3821	NCF31CZ-104X	C CAPACITOR	0.1uF 16V Z
C3822	NCF31CZ-104X	C CAPACITOR	0.1uF 16V Z
C3823	NCF31CZ-104X	C CAPACITOR	0.1uF 16V Z
C3824	NCF31CZ-104X	C CAPACITOR	0.1uF 16V Z
C3825	NCF31CZ-104X	C CAPACITOR	0.1uF 16V Z
C3826	NCF31CZ-104X	C CAPACITOR	0.1uF 16V Z
C3827	NCF31CZ-104X	C CAPACITOR	0.1uF 16V Z
C3828	NCF31CZ-104X	C CAPACITOR	0.1uF 16V Z
C3829	NCF31CZ-104X	C CAPACITOR	0.1uF 16V Z
C3830	NCF31CZ-104X	C CAPACITOR	0.1uF 16V Z
C3831	NCF31CZ-104X	C CAPACITOR	0.1uF 16V Z
C3832	NCF31CZ-104X	C CAPACITOR	0.1uF 16V Z
C3833	NCF31CZ-104X	C CAPACITOR	0.1uF 16V Z
C3834	NCF31CZ-104X	C CAPACITOR	0.1uF 16V Z
C3835	NCF31CZ-104X	C CAPACITOR	0.1uF 16V Z
C3836	NCF31CZ-104X	C CAPACITOR	0.1uF 16V Z
C3837	NCF31CZ-104X	C CAPACITOR	0.1uF 16V Z
C3838	NCF31CZ-104X	C CAPACITOR	0.1uF 16V Z
C3839	NCF31CZ-104X	C CAPACITOR	0.1uF 16V Z
C3840	NCF31CZ-104X	C CAPACITOR	0.1uF 16V Z
C3841	NCF31CZ-104X	C CAPACITOR	0.1uF 16V Z
C3842	NCF31CZ-104X	C CAPACITOR	0.1uF 16V Z
C3843	NCF31CZ-104X	C CAPACITOR	0.1uF 16V Z
C3844	NCF31CZ-104X	C CAPACITOR	0.1uF 16V Z
C3845	NCF31CZ-104X	C CAPACITOR	0.1uF 16V Z
C3901	NCB31CK-104X	C CAPACITOR	0.1uF 16V K
C3902	NCB31HK-103X	C CAPACITOR	0.01uF 50V K
C3904	NDC31HJ-221X	C CAPACITOR	220pF 50V J
C3905	NDC31HJ-470X	C CAPACITOR	47pF 50V J
C3906	NCB31HK-102X	C CAPACITOR	1000pF 50V K
C3907	NCB31CK-104X	C CAPACITOR	0.1uF 16V K
C3908	NCB31HK-272X	C CAPACITOR	2700pF 50V K
C3909	NCB11AK-475X	C CAPACITOR	4.7uF 10V K
C3910	NCB11AK-475X	C CAPACITOR	4.7uF 10V K
C3911	NBZ0010-396X	SP E CAPACITOR	39uF 16V M
C3914	NEX60GM-337X	E CAPACITOR	330uF 4V M
C3915	NCB31HK-102X	C CAPACITOR	1000pF 50V K
C3916	NCB31HK-102X	C CAPACITOR	1000pF 50V K
C3917	NDC31HJ-102X	C CAPACITOR	1000pF 50V J
C3931	NBZ0010-396X	SP E CAPACITOR	39uF 16V M
C3932	NCB31HK-223X	C CAPACITOR	0.022uF 50V K
C3933	NCB31HK-102X	C CAPACITOR	1000pF 50V K
C3934	NEX61AM-127X	E CAPACITOR	120uF 10V M
C3941	NCB31CK-104X	C CAPACITOR	0.1uF 16V K
C3942	NCB31HK-102X	C CAPACITOR	1000pF 50V K
C3951	NEZ0032-476X	E CAPACITOR	47uF
C3952	NCF31CZ-104X	C CAPACITOR	0.1uF 16V Z
C3953	NEZ0032-476X	E CAPACITOR	47uF
C3954	NCF31CZ-104X	C CAPACITOR	0.1uF 16V Z
C3955	NCB31HK-102X	C CAPACITOR	1000pF 50V K
C3956	NCF31CZ-104X	C CAPACITOR	0.1uF 16V Z
C3958	NEZ0032-476X	E CAPACITOR	47uF
C3959	NCF31CZ-104X	C CAPACITOR	0.1uF 16V Z
C3960	NEZ0032-476X	E CAPACITOR	47uF
C3961	NCF31CZ-104X	C CAPACITOR	0.1uF 16V Z
C3965	NEZ0032-106X	E CAPACITOR	10uF
C3966	NCF31CZ-104X	C CAPACITOR	0.1uF 16V Z
C3967	NEZ0032-476X	E CAPACITOR	47uF
C3968	NCF31CZ-104X	C CAPACITOR	0.1uF 16V Z
C3969	NCB11AK-106X	C CAPACITOR	10uF 10V K
C3970	NCF31CZ-104X	C CAPACITOR	0.1uF 16V Z
C3971	NCF31CZ-104X	C CAPACITOR	0.1uF 16V Z
C3972	NBE50JM-107X	TA E CAPACITOR	100uF 6.3V M
C3973	NCF31CZ-104X	C CAPACITOR	0.1uF 16V Z
C3974	NCB31CK-104X	C CAPACITOR	0.1uF 16V K
C8001	NEZ0032-476X	E CAPACITOR	47uF
C8002	NCF31CZ-104X	C CAPACITOR	0.1uF 16V Z
C8003	NEZ0032-476X	E CAPACITOR	47uF
C8004	NEZ0032-476X	E CAPACITOR	47uF
C8005	NDC31HJ-101X	C CAPACITOR	100pF 50V J
C8008	NEZ0032-106X	E CAPACITOR	10uF
C8009	NCF31CZ-104X	C CAPACITOR	0.1uF 16V Z

⚠Ref No.	Part No.	Part Name	Description Local
C8010	NEZ0032-476X	E CAPACITOR	47uF
C8011	NDC31HJ-101X	C CAPACITOR	100pF 50V J
C8018	NEZ0032-106X	E CAPACITOR	10uF
C8019	NCF31CZ-104X	C CAPACITOR	0.1uF 16V Z
C8020	NEZ0032-476X	E CAPACITOR	47uF
C8021	NDC31HJ-101X	C CAPACITOR	100pF 50V J
C8031	NCB10JK-106X	C CAPACITOR	10uF 6.3V K
CA3001	NCF31CZ-104X	C CAPACITOR	0.1uF 16V Z
CA3002	NCF31CZ-104X	C CAPACITOR	0.1uF 16V Z
CA3003	NCF31CZ-104X	C CAPACITOR	0.1uF 16V Z
CA3004	NCF31CZ-104X	C CAPACITOR	0.1uF 16V Z
CA3005	NCF31CZ-104X	C CAPACITOR	0.1uF 16V Z
CA3006	NCF31CZ-104X	C CAPACITOR	0.1uF 16V Z
CA3007	NCF31CZ-104X	C CAPACITOR	0.1uF 16V Z
CA3008	NCF31CZ-104X	C CAPACITOR	0.1uF 16V Z
CA3009	NCF31CZ-104X	C CAPACITOR	0.1uF 16V Z
CA3010	NCF31CZ-104X	C CAPACITOR	0.1uF 16V Z
CA3011	NCF31CZ-104X	C CAPACITOR	0.1uF 16V Z
CA3012	NCF31CZ-104X	C CAPACITOR	0.1uF 16V Z
CA3013	NCF31CZ-104X	C CAPACITOR	0.1uF 16V Z
CA3014	NCF31CZ-104X	C CAPACITOR	0.1uF 16V Z
CA3015	NCF31CZ-104X	C CAPACITOR	0.1uF 16V Z
CA3016	NCF31CZ-104X	C CAPACITOR	0.1uF 16V Z
CA3017	NCF31CZ-104X	C CAPACITOR	0.1uF 16V Z
CA3018	NCF31CZ-104X	C CAPACITOR	0.1uF 16V Z
CA3019	NCF31CZ-104X	C CAPACITOR	0.1uF 16V Z
CA3020	NCF31CZ-104X	C CAPACITOR	0.1uF 16V Z
CA3021	NCF31CZ-104X	C CAPACITOR	0.1uF 16V Z
CA3022	NCF31CZ-104X	C CAPACITOR	0.1uF 16V Z
CA3023	NCF31CZ-104X	C CAPACITOR	0.1uF 16V Z
CA3024	NCF31CZ-104X	C CAPACITOR	0.1uF 16V Z
CA3025	NCF31CZ-104X	C CAPACITOR	0.1uF 16V Z
CA3026	NCF31CZ-104X	C CAPACITOR	0.1uF 16V Z
CA3027	NCF31CZ-104X	C CAPACITOR	0.1uF 16V Z
CA3028	NCF31CZ-104X	C CAPACITOR	0.1uF 16V Z
CA3029	NCF31CZ-104X	C CAPACITOR	0.1uF 16V Z
CA3030	NCF31CZ-104X	C CAPACITOR	0.1uF 16V Z
CA3031	NCF31CZ-104X	C CAPACITOR	0.1uF 16V Z
CA3032	NCF31CZ-104X	C CAPACITOR	0.1uF 16V Z
CA3033	NCF31CZ-104X	C CAPACITOR	0.1uF 16V Z
CA3034	NCF31CZ-104X	C CAPACITOR	0.1uF 16V Z
CA3035	NCF31CZ-104X	C CAPACITOR	0.1uF 16V Z
CA3036	NCF31CZ-104X	C CAPACITOR	0.1uF 16V Z
CA3037	NCF31CZ-104X	C CAPACITOR	0.1uF 16V Z
CA3901	NBE40JM-476X	TA E CAPACITOR	47uF 6.3V M
CA3902	NCF31CZ-104X	C CAPACITOR	0.1uF 16V Z
CA3903	NCF31CZ-104X	C CAPACITOR	0.1uF 16V Z
CA3904	NCB10JK-106X	C CAPACITOR	10uF 6.3V K
CA3905	NCF31CZ-104X	C CAPACITOR	0.1uF 16V Z
CA3906	NBE40JM-476X	TA E CAPACITOR	47uF 6.3V M
CA3907	NCF31CZ-104X	C CAPACITOR	0.1uF 16V Z
CA3908	NCF31CZ-104X	C CAPACITOR	0.1uF 16V Z
CA3909	NCB10JK-106X	C CAPACITOR	10uF 6.3V K
CA3910	NCF31CZ-104X	C CAPACITOR	0.1uF 16V Z
CA3911	NBE40JM-476X	TA E CAPACITOR	47uF 6.3V M
CA3912	NCF31CZ-104X	C CAPACITOR	0.1uF 16V Z
CA3913	NCF31CZ-104X	C CAPACITOR	0.1uF 16V Z
CA3914	NCB10JK-106X	C CAPACITOR	10uF 6.3V K
CA3915	NCF31CZ-104X	C CAPACITOR	0.1uF 16V Z
CA3916	NBE40JM-476X	TA E CAPACITOR	47uF 6.3V M
CA3917	NCF31CZ-104X	C CAPACITOR	0.1uF 16V Z
CA3918	NCF31CZ-104X	C CAPACITOR	0.1uF 16V Z
CA3919	NCB10JK-106X	C CAPACITOR	10uF 6.3V K
CA3920	NCF31CZ-104X	C CAPACITOR	0.1uF 16V Z
CA3921	NBE40JM-476X	TA E CAPACITOR	47uF 6.3V M
CA3922	NBE40JM-476X	TA E CAPACITOR	47uF 6.3V M
CA3923	NCF31CZ-104X	C CAPACITOR	0.1uF 16V Z
CA3924	NCF31CZ-104X	C CAPACITOR	0.1uF 16V Z
CA3925	NCB10JK-106X	C CAPACITOR	10uF 6.3V K
CA3926	NCF31CZ-104X	C CAPACITOR	0.1uF 16V Z
CA3927	NBE40JM-476X	TA E CAPACITOR	47uF 6.3V M
CA3928	NCF31CZ-104X	C CAPACITOR	0.1uF 16V Z
CA3929	NCF31CZ-104X	C CAPACITOR	0.1uF 16V Z
CA3930	NCB10JK-106X	C CAPACITOR	10uF 6.3V K
CA3931	NCF31CZ-104X	C CAPACITOR	0.1uF 16V Z
CA3932	NBE40JM-476X	TA E CAPACITOR	47uF 6.3V M
CA3933	NCF31CZ-104X	C CAPACITOR	0.1uF 16V Z
CA3934	NCF31CZ-104X	C CAPACITOR	0.1uF 16V Z
CA3935	NCB10JK-106X	C CAPACITOR	10uF 6.3V K
CA3936	NCF31CZ-104X	C CAPACITOR	0.1uF 16V Z
CA3937	NBE40JM-476X	TA E CAPACITOR	47uF 6.3V M
CA3938	NCF31CZ-104X	C CAPACITOR	0.1uF 16V Z
CA3939	NCF31CZ-104X	C CAPACITOR	0.1uF 16V Z
CA3940	NCB10JK-106X	C CAPACITOR	10uF 6.3V K
CA3941	NCF31CZ-104X	C CAPACITOR	0.1uF 16V Z
CA3942	NBE40JM-476X	TA E CAPACITOR	47uF 6.3V M
CA3943	NBE40JM-476X	TA E CAPACITOR	47uF 6.3V M
CA3944	NCF31CZ-104X	C CAPACITOR	0.1uF 16V Z
CA3945	NCF31CZ-104X	C CAPACITOR	0.1uF 16V Z
CA3946	NCB10JK-106X	C CAPACITOR	10uF 6.3V K

⚠Ref No.	Part No.	Part Name	Description Local
CA3947	NCF31CZ-104X	C CAPACITOR	0.1uF 16V Z
CA3948	NBE40JM-476X	TA E CAPACITOR	47uF 6.3V M
CA3949	NCF31CZ-104X	C CAPACITOR	0.1uF 16V Z
CA3950	NCF31CZ-104X	C CAPACITOR	0.1uF 16V Z
CA3951	NCB10JK-106X	C CAPACITOR	10uF 6.3V K
CA3952	NCF31CZ-104X	C CAPACITOR	0.1uF 16V Z
CA3953	NBE40JM-476X	TA E CAPACITOR	47uF 6.3V M
CA3954	NCF31CZ-104X	C CAPACITOR	0.1uF 16V Z
CA3955	NCF31CZ-104X	C CAPACITOR	0.1uF 16V Z
CA3956	NCB10JK-106X	C CAPACITOR	10uF 6.3V K
CA3957	NCF31CZ-104X	C CAPACITOR	0.1uF 16V Z
CA3958	NBE40JM-476X	TA E CAPACITOR	47uF 6.3V M
CA3959	NCF31CZ-104X	C CAPACITOR	0.1uF 16V Z
CA3960	NCF31CZ-104X	C CAPACITOR	0.1uF 16V Z
CA3961	NCB10JK-106X	C CAPACITOR	10uF 6.3V K
CA3962	NCF31CZ-104X	C CAPACITOR	0.1uF 16V Z
CA3963	NBE40JM-476X	TA E CAPACITOR	47uF 6.3V M
CA3964	NBE20GM-336X	TA E CAPACITOR	33uF 4V M
CA3965	NBE20GM-336X	TA E CAPACITOR	33uF 4V M
CA3966	NBE20GM-336X	TA E CAPACITOR	33uF 4V M
CA3967	NBE20GM-336X	TA E CAPACITOR	33uF 4V M
CA3968	NBE20GM-336X	TA E CAPACITOR	33uF 4V M
CA3969	NBE20GM-336X	TA E CAPACITOR	33uF 4V M
CA3980	NBE50JM-107X	TA E CAPACITOR	100uF 6.3V M
CA3981	NCF31CZ-104X	C CAPACITOR	0.1uF 16V Z
CA3982	NBE40JM-476X	TA E CAPACITOR	47uF 6.3V M
CA3983	NCF31CZ-104X	C CAPACITOR	0.1uF 16V Z
CA3984	NCF31CZ-104X	C CAPACITOR	0.1uF 16V Z
CA3985	NCB10JK-106X	C CAPACITOR	10uF 6.3V K
CA3986	NBE50JM-107X	TA E CAPACITOR	100uF 6.3V M
CA3987	NCF31CZ-104X	C CAPACITOR	0.1uF 16V Z
CA3988	NCF31CZ-104X	C CAPACITOR	0.1uF 16V Z
CA3989	NCF31CZ-104X	C CAPACITOR	0.1uF 16V Z
CA3990	NCF31CZ-104X	C CAPACITOR	0.1uF 16V Z
CA3991	NCB10JK-106X	C CAPACITOR	10uF 6.3V K
R3001	NRSA63J-101X	MG RESISTOR	100Ω 1/16W J
R3002	NRSA63J-101X	MG RESISTOR	100Ω 1/16W J
R3003	NRSA63J-101X	MG RESISTOR	100Ω 1/16W J
R3004	NRSA63J-101X	MG RESISTOR	100Ω 1/16W J
R3005	NRSA63J-101X	MG RESISTOR	100Ω 1/16W J
R3006	NRSA63J-101X	MG RESISTOR	100Ω 1/16W J
R3007	NRSA63J-101X	MG RESISTOR	100Ω 1/16W J
R3008	NRSA63J-101X	MG RESISTOR	100Ω 1/16W J
R3009	NRSA63J-101X	MG RESISTOR	100Ω 1/16W J
R3010	NRSA63J-101X	MG RESISTOR	100Ω 1/16W J
R3011	NRSA63J-101X	MG RESISTOR	100Ω 1/16W J
R3012	NRSA63J-101X	MG RESISTOR	100Ω 1/16W J
R3013	NRSA63J-103X	MG RESISTOR	10kΩ 1/16W J
R3014	NRSA63J-332X	MG RESISTOR	3.3kΩ 1/16W J
R3015	NRSA63J-332X	MG RESISTOR	3.3kΩ 1/16W J
R3016	NRSA63J-0R0X	MG RESISTOR	0Ω 1/16W J
R3018	NRSA63J-101X	MG RESISTOR	100Ω 1/16W J
R3019	NRSA63J-100X	MG RESISTOR	10Ω 1/16W J
R3020	NRSA63J-100X	MG RESISTOR	10Ω 1/16W J
R3021	NRSA63J-100X	MG RESISTOR	10Ω 1/16W J
R3022	NRSA63J-100X	MG RESISTOR	10Ω 1/16W J
R3023	NRSA63J-103X	MG RESISTOR	10kΩ 1/16W J
R3024	NRSA63J-332X	MG RESISTOR	3.3kΩ 1/16W J
R3025	NRSA63J-332X	MG RESISTOR	3.3kΩ 1/16W J
R3026	NRSA63J-0R0X	MG RESISTOR	0Ω 1/16W J
R3028	NRSA63J-101X	MG RESISTOR	100Ω 1/16W J
R3029	NRSA63J-0R0X	MG RESISTOR	0Ω 1/16W J
R3030	NRSA63J-0R0X	MG RESISTOR	0Ω 1/16W J
R3031	NRSA63J-0R0X	MG RESISTOR	0Ω 1/16W J
R3032	NRSA63J-0R0X	MG RESISTOR	0Ω 1/16W J
R3033	NRSA63J-0R0X	MG RESISTOR	0Ω 1/16W J
R3034	NRSA63J-100X	MG RESISTOR	10Ω 1/16W J
R3035	NRSA63J-0R0X	MG RESISTOR	0Ω 1/16W J
R3036	NRSA63J-332X	MG RESISTOR	3.3kΩ 1/16W J
R3037	NRSA63J-332X	MG RESISTOR	3.3kΩ 1/16W J
R3038	NRSA63J-332X	MG RESISTOR	3.3kΩ 1/16W J
R3039	NRSA63J-332X	MG RESISTOR	3.3kΩ 1/16W J
R3040	NRSA63J-332X	MG RESISTOR	3.3kΩ 1/16W J
R3041	NRSA63J-332X	MG RESISTOR	3.3kΩ 1/16W J
R3044	NRZ0040-100X	NET RESISTOR	10Ω 1/16W J x4
R3045	NRZ0040-0R0X	NET RESISTOR	0Ω 1/16W J x4
R3047	NRSA63J-0R0X	MG RESISTOR	0Ω 1/16W J
R3048	NRSA63J-560X	MG RESISTOR	56Ω 1/16W J
R3049	NRSA63J-560X	MG RESISTOR	56Ω 1/16W J
R3050	NRSA63J-0R0X	MG RESISTOR	0Ω 1/16W J
R3052	NRSA63J-560X	MG RESISTOR	56Ω 1/16W J
R3054	NRSA63J-331X	MG RESISTOR	330Ω 1/16W J
R3055	NRSA63J-472X	MG RESISTOR	4.7kΩ 1/16W J
R3056	NRSA63J-472X	MG RESISTOR	4.7kΩ 1/16W J
R3062	NRSA63J-472X	MG RESISTOR	4.7kΩ 1/16W J
R3063	NRSA63J-472X	MG RESISTOR	4.7kΩ 1/16W J
R3064	NRSA63J-0R0X	MG RESISTOR	0Ω 1/16W J
R3065	NRSA63J-0R0X	MG RESISTOR	0Ω 1/16W J
R3066	NRSA63J-0R0X	MG RESISTOR	0Ω 1/16W J

⚠Ref No.	Part No.	Part Name	Description Local
R3067	NRSA63J-0R0X	MG RESISTOR	0Ω 1/16W J
R3068	NRSA63J-0R0X	MG RESISTOR	0Ω 1/16W J
R3069	NRSA63J-0R0X	MG RESISTOR	0Ω 1/16W J
R3070	NRSA63J-510X	MG RESISTOR	51Ω 1/16W J
R3071	NRSA63J-0R0X	MG RESISTOR	0Ω 1/16W J
R3073	NRSA63J-0R0X	MG RESISTOR	0Ω 1/16W J
R3074	NRSA63J-0R0X	MG RESISTOR	0Ω 1/16W J
R3075	NRSA63J-0R0X	MG RESISTOR	0Ω 1/16W J
R3077	NRSA63J-0R0X	MG RESISTOR	0Ω 1/16W J
R3078	NRSA63J-0R0X	MG RESISTOR	0Ω 1/16W J
R3079	NRSA63J-332X	MG RESISTOR	3.3kΩ 1/16W J
R3080	NRSA63J-0R0X	MG RESISTOR	0Ω 1/16W J
R3081	NRSA63J-0R0X	MG RESISTOR	0Ω 1/16W J
R3082	NRSA02J-0R0X	MG RESISTOR	0Ω 1/10W J
R3084	NRSA63J-101X	MG RESISTOR	100Ω 1/16W J
R3085	NRSA63J-101X	MG RESISTOR	100Ω 1/16W J
R3086	NRSA63J-101X	MG RESISTOR	100Ω 1/16W J
R3087	NRSA63J-101X	MG RESISTOR	100Ω 1/16W J
R3088	NRSA63J-101X	MG RESISTOR	100Ω 1/16W J
R3090	NRSA63J-100X	MG RESISTOR	10Ω 1/16W J
R3091	NRSA63J-100X	MG RESISTOR	10Ω 1/16W J
R3092	NRSA63J-100X	MG RESISTOR	10Ω 1/16W J
R3093	NRSA63J-103X	MG RESISTOR	10kΩ 1/16W J
R3094	NRZ0080-0R0X	NET RESISTOR	0Ω 1/16W J
R3095	NRZ0040-0R0X	NET RESISTOR	0Ω 1/16W J x4
R3096	NRZ0080-0R0X	NET RESISTOR	0Ω 1/16W J
R3097	NRSA63J-100X	MG RESISTOR	10Ω 1/16W J
R3101	NRSA63J-0R0X	MG RESISTOR	0Ω 1/16W J
R3104	NRZ0040-220X	NET RESISTOR	22Ω 1/16W J x4
R3105	NRZ0040-510X	NET RESISTOR	51Ω 1/16W J x4
R3106	NRZ0040-220X	NET RESISTOR	22Ω 1/16W J x4
R3107	NRZ0040-510X	NET RESISTOR	51Ω 1/16W J x4
R3108	NRZ0040-220X	NET RESISTOR	22Ω 1/16W J x4
R3109	NRZ0040-510X	NET RESISTOR	51Ω 1/16W J x4
R3110	NRZ0040-220X	NET RESISTOR	22Ω 1/16W J x4
R3111	NRZ0040-510X	NET RESISTOR	51Ω 1/16W J x4
R3112	NRZ0040-220X	NET RESISTOR	22Ω 1/16W J x4
R3113	NRZ0040-510X	NET RESISTOR	51Ω 1/16W J x4
R3114	NRZ0040-220X	NET RESISTOR	22Ω 1/16W J x4
R3115	NRZ0040-510X	NET RESISTOR	51Ω 1/16W J x4
R3116	NRZ0040-220X	NET RESISTOR	22Ω 1/16W J x4
R3117	NRZ0040-510X	NET RESISTOR	51Ω 1/16W J x4
R3118	NRZ0040-220X	NET RESISTOR	22Ω 1/16W J x4
R3119	NRZ0040-510X	NET RESISTOR	51Ω 1/16W J x4
R3120	NRZ0040-220X	NET RESISTOR	22Ω 1/16W J x4
R3121	NRZ0040-510X	NET RESISTOR	51Ω 1/16W J x4
R3122	NRZ0040-220X	NET RESISTOR	22Ω 1/16W J x4
R3123	NRZ0040-510X	NET RESISTOR	51Ω 1/16W J x4
R3124	NRZ0040-220X	NET RESISTOR	22Ω 1/16W J x4
R3125	NRZ0040-510X	NET RESISTOR	51Ω 1/16W J x4
R3127	NRSA63J-220X	MG RESISTOR	22Ω 1/16W J
R3128	NRSA63J-510X	MG RESISTOR	51Ω 1/16W J
R3129	NRSA63J-220X	MG RESISTOR	22Ω 1/16W J
R3130	NRSA63J-510X	MG RESISTOR	51Ω 1/16W J
R3131	NRSA63J-220X	MG RESISTOR	22Ω 1/16W J
R3132	NRSA63J-510X	MG RESISTOR	51Ω 1/16W J
R3134	NRSA63J-220X	MG RESISTOR	22Ω 1/16W J
R3135	NRSA63J-510X	MG RESISTOR	51Ω 1/16W J
R3136	NRSA63J-220X	MG RESISTOR	22Ω 1/16W J
R3138	NRSA63J-101X	MG RESISTOR	100Ω 1/16W J
R3139	NRSA63J-220X	MG RESISTOR	22Ω 1/16W J
R3141	NRSA63J-0R0X	MG RESISTOR	0Ω 1/16W J
R3142	NRSA63J-220X	MG RESISTOR	22Ω 1/16W J
R3143	NRSA63J-220X	MG RESISTOR	22Ω 1/16W J
R3145	NRSA63J-472X	MG RESISTOR	4.7kΩ 1/16W J
R3147	NRSA63J-220X	MG RESISTOR	22Ω 1/16W J
R3148	NRSA63J-220X	MG RESISTOR	22Ω 1/16W J
R3150	NRSA63J-472X	MG RESISTOR	4.7kΩ 1/16W J
R3151	NRSA63J-472X	MG RESISTOR	4.7kΩ 1/16W J
R3152	NRSA63J-0R0X	MG RESISTOR	0Ω 1/16W J
R3153	NRSA63J-220X	MG RESISTOR	22Ω 1/16W J
R3154	NRSA63J-220X	MG RESISTOR	22Ω 1/16W J
R3155	NRSA63J-472X	MG RESISTOR	4.7kΩ 1/16W J
R3156	NRSA63J-0R0X	MG RESISTOR	0Ω 1/16W J
R3157	NRZ0040-510X	NET RESISTOR	51Ω 1/16W J x4
R3158	NRZ0040-510X	NET RESISTOR	51Ω 1/16W J x4
R3159	NRZ0040-510X	NET RESISTOR	51Ω 1/16W J x4
R3160	NRZ0040-510X	NET RESISTOR	51Ω 1/16W J x4
R3161	NRZ0040-510X	NET RESISTOR	51Ω 1/16W J x4
R3162	NRZ0040-510X	NET RESISTOR	51Ω 1/16W J x4
R3163	NRZ0040-510X	NET RESISTOR	51Ω 1/16W J x4
R3164	NRZ0040-510X	NET RESISTOR	51Ω 1/16W J x4
R3165	NRZ0040-510X	NET RESISTOR	51Ω 1/16W J x4
R3166	NRZ0040-510X	NET RESISTOR	51Ω 1/16W J x4
R3167	NRZ0040-510X	NET RESISTOR	51Ω 1/16W J x4
R3168	NRZ0040-510X	NET RESISTOR	51Ω 1/16W J x4
R3169	NRZ0040-510X	NET RESISTOR	51Ω 1/16W J x4
R3170	NRZ0040-510X	NET RESISTOR	51Ω 1/16W J x4
R3171	NRZ0040-510X	NET RESISTOR	51Ω 1/16W J x4
R3172	NRZ0040-510X	NET RESISTOR	51Ω 1/16W J x4
R3173	NRSA63J-0R0X	MG RESISTOR	0Ω 1/16W J
R3176	NRZ0040-220X	NET RESISTOR	22Ω 1/16W J x4
R3177	NRZ0040-510X	NET RESISTOR	51Ω 1/16W J x4
R3178	NRZ0040-220X	NET RESISTOR	22Ω 1/16W J x4
R3179	NRZ0040-510X	NET RESISTOR	51Ω 1/16W J x4
R3180	NRZ0040-220X	NET RESISTOR	22Ω 1/16W J x4
R3181	NRZ0040-510X	NET RESISTOR	51Ω 1/16W J x4
R3182	NRZ0040-220X	NET RESISTOR	22Ω 1/16W J x4
R3183	NRZ0040-510X	NET RESISTOR	51Ω 1/16W J x4
R3184	NRZ0040-220X	NET RESISTOR	22Ω 1/16W J x4
R3185	NRZ0040-510X	NET RESISTOR	51Ω 1/16W J x4
R3186	NRZ0040-220X	NET RESISTOR	22Ω 1/16W J x4
R3187	NRZ0040-510X	NET RESISTOR	51Ω 1/16W J x4
R3188	NRZ0040-220X	NET RESISTOR	22Ω 1/16W J x4
R3189	NRZ0040-510X	NET RESISTOR	51Ω 1/16W J x4
R3190	NRZ0040-220X	NET RESISTOR	22Ω 1/16W J x4
R3191	NRZ0040-510X	NET RESISTOR	51Ω 1/16W J x4
R3192	NRZ0040-220X	NET RESISTOR	22Ω 1/16W J x4
R3193	NRZ0040-510X	NET RESISTOR	51Ω 1/16W J x4
R3194	NRZ0040-220X	NET RESISTOR	22Ω 1/16W J x4
R3195	NRZ0040-510X	NET RESISTOR	51Ω 1/16W J x4
R3196	NRZ0040-220X	NET RESISTOR	22Ω 1/16W J x4
R3197	NRZ0040-510X	NET RESISTOR	51Ω 1/16W J x4
R3199	NRSA63J-220X	MG RESISTOR	22Ω 1/16W J
R3200	NRSA63J-510X	MG RESISTOR	51Ω 1/16W J
R3201	NRSA63J-220X	MG RESISTOR	22Ω 1/16W J
R3202	NRSA63J-510X	MG RESISTOR	51Ω 1/16W J
R3203	NRSA63J-220X	MG RESISTOR	22Ω 1/16W J
R3204	NRSA63J-510X	MG RESISTOR	51Ω 1/16W J
R3205	NRSA63J-0R0X	MG RESISTOR	0Ω 1/16W J
R3206	NRSA63J-220X	MG RESISTOR	22Ω 1/16W J
R3207	NRSA63J-510X	MG RESISTOR	51Ω 1/16W J
R3208	NRSA63J-220X	MG RESISTOR	22Ω 1/16W J
R3210	NRSA63J-101X	MG RESISTOR	100Ω 1/16W J
R3211	NRSA63J-220X	MG RESISTOR	22Ω 1/16W J
R3215	NRSA63J-472X	MG RESISTOR	4.7kΩ 1/16W J
R3217	NRSA63J-472X	MG RESISTOR	4.7kΩ 1/16W J
R3219	NRSA63J-472X	MG RESISTOR	4.7kΩ 1/16W J
R3221	NRSA63J-472X	MG RESISTOR	4.7kΩ 1/16W J
R3222	NQR0499-001X	FERRITE BEADS	
R3223	NQR0499-001X	FERRITE BEADS	
R3227	NRSA63J-220X	MG RESISTOR	22Ω 1/16W J
R3229	NRSA63J-0R0X	MG RESISTOR	0Ω 1/16W J
R3232	NRSA02J-0R0X	MG RESISTOR	0Ω 1/10W J
R3233	NRSA02J-0R0X	MG RESISTOR	0Ω 1/10W J
R3234	NRSA02J-0R0X	MG RESISTOR	0Ω 1/10W J
R3235	NRSA02J-0R0X	MG RESISTOR	0Ω 1/10W J
R3236	NRSA63J-0R0X	MG RESISTOR	0Ω 1/16W J
R3237	NRSA63J-0R0X	MG RESISTOR	0Ω 1/16W J
R3238	NRSA63J-0R0X	MG RESISTOR	0Ω 1/16W J
R3239	NRSA63J-0R0X	MG RESISTOR	0Ω 1/16W J
R3241	NRSA63J-0R0X	MG RESISTOR	0Ω 1/16W J
R3242	NRSA63J-0R0X	MG RESISTOR	0Ω 1/16W J
R3243	NRVA63D-302X	CMF RESISTOR	3kΩ 1/16W D
R3246	NRVA63D-102X	CMF RESISTOR	1kΩ 1/16W D
R3247	NRVA63D-202X	CMF RESISTOR	2kΩ 1/16W D
R3248	NRVA63D-102X	CMF RESISTOR	1kΩ 1/16W D
R3249	NRVA63D-202X	CMF RESISTOR	2kΩ 1/16W D
R3253	NRVA63D-102X	CMF RESISTOR	1kΩ 1/16W D
R3254	NRVA63D-202X	CMF RESISTOR	2kΩ 1/16W D
R3255	NRVA63D-102X	CMF RESISTOR	1kΩ 1/16W D
R3256	NRVA63D-102X	CMF RESISTOR	1kΩ 1/16W D
R3257	NRVA63D-202X	CMF RESISTOR	2kΩ 1/16W D
R3258	NRSA63J-330X	MG RESISTOR	33Ω 1/16W J
R3259	NRVA63D-102X	CMF RESISTOR	1kΩ 1/16W D
R3260	NRVA63D-102X	CMF RESISTOR	1kΩ 1/16W D
R3261	NRSA63J-0R0X	MG RESISTOR	0Ω 1/16W J
R3262	NRSA63J-510X	MG RESISTOR	51Ω 1/16W J
R3263	NRSA63J-510X	MG RESISTOR	51Ω 1/16W J
R3264	NRZ0040-510X	NET RESISTOR	51Ω 1/16W J x4
R3265	NRZ0040-510X	NET RESISTOR	51Ω 1/16W J x4
R3266	NRSA63J-510X	MG RESISTOR	51Ω 1/16W J
R3267	NRSA63J-510X	MG RESISTOR	51Ω 1/16W J
R3268	NRZ0040-510X	NET RESISTOR	51Ω 1/16W J x4
R3269	NRZ0040-510X	NET RESISTOR	51Ω 1/16W J x4
R3270	NRSA63J-0R0X	MG RESISTOR	0Ω 1/16W J
R3271	NRSA63J-510X	MG RESISTOR	51Ω 1/16W J
R3272	NRSA63J-510X	MG RESISTOR	51Ω 1/16W J
R3273	NRSA63J-510X	MG RESISTOR	51Ω 1/16W J
R3274	NRSA63J-510X	MG RESISTOR	51Ω 1/16W J
R3275	NRSA63J-510X	MG RESISTOR	51Ω 1/16W J
R3276	NRSA63J-510X	MG RESISTOR	51Ω 1/16W J
R3277	NRSA63J-510X	MG RESISTOR	51Ω 1/16W J
R3278	NRSA63J-510X	MG RESISTOR	51Ω 1/16W J
R3279	NRSA63J-510X	MG RESISTOR	51Ω 1/16W J
R3280	NRSA63J-510X	MG RESISTOR	51Ω 1/16W J
R3283	NRSA63J-0R0X	MG RESISTOR	0Ω 1/16W J
R3284	NRSA63J-0R0X	MG RESISTOR	0Ω 1/16W J
R3285	NRSA63J-0R0X	MG RESISTOR	0Ω 1/16W J
R3286	NRSA63J-0R0X	MG RESISTOR	0Ω 1/16W J

⚠Ref No.	Part No.	Part Name	Description Local
R3289	NRSA63J-0R0X	MG RESISTOR	0Ω 1/16W J
R3290	NRSA63J-0R0X	MG RESISTOR	0Ω 1/16W J
R3291	NRSA63J-0R0X	MG RESISTOR	0Ω 1/16W J
R3292	NRSA63J-0R0X	MG RESISTOR	0Ω 1/16W J
R3295	NRSA63J-0R0X	MG RESISTOR	0Ω 1/16W J
R3296	NRSA63J-0R0X	MG RESISTOR	0Ω 1/16W J
R3297	NRSA63J-0R0X	MG RESISTOR	0Ω 1/16W J
R3298	NRSA63J-0R0X	MG RESISTOR	0Ω 1/16W J
R3299	NRSA63J-0R0X	MG RESISTOR	0Ω 1/16W J
R3301	NRSA63J-0R0X	MG RESISTOR	0Ω 1/16W J
R3304	NRZ0040-220X	NET RESISTOR	22Ω 1/16W J x4
R3305	NRZ0040-510X	NET RESISTOR	51Ω 1/16W J x4
R3306	NRZ0040-220X	NET RESISTOR	22Ω 1/16W J x4
R3307	NRZ0040-510X	NET RESISTOR	51Ω 1/16W J x4
R3308	NRZ0040-220X	NET RESISTOR	22Ω 1/16W J x4
R3309	NRZ0040-510X	NET RESISTOR	51Ω 1/16W J x4
R3310	NRZ0040-220X	NET RESISTOR	22Ω 1/16W J x4
R3311	NRZ0040-510X	NET RESISTOR	51Ω 1/16W J x4
R3312	NRZ0040-220X	NET RESISTOR	22Ω 1/16W J x4
R3313	NRZ0040-510X	NET RESISTOR	51Ω 1/16W J x4
R3314	NRZ0040-220X	NET RESISTOR	22Ω 1/16W J x4
R3315	NRZ0040-510X	NET RESISTOR	51Ω 1/16W J x4
R3316	NRZ0040-220X	NET RESISTOR	22Ω 1/16W J x4
R3317	NRZ0040-510X	NET RESISTOR	51Ω 1/16W J x4
R3318	NRZ0040-220X	NET RESISTOR	22Ω 1/16W J x4
R3319	NRZ0040-510X	NET RESISTOR	51Ω 1/16W J x4
R3320	NRZ0040-220X	NET RESISTOR	22Ω 1/16W J x4
R3321	NRZ0040-510X	NET RESISTOR	51Ω 1/16W J x4
R3322	NRZ0040-220X	NET RESISTOR	22Ω 1/16W J x4
R3323	NRZ0040-510X	NET RESISTOR	51Ω 1/16W J x4
R3324	NRZ0040-220X	NET RESISTOR	22Ω 1/16W J x4
R3325	NRZ0040-510X	NET RESISTOR	51Ω 1/16W J x4
R3327	NRSA63J-220X	MG RESISTOR	22Ω 1/16W J
R3328	NRSA63J-510X	MG RESISTOR	51Ω 1/16W J
R3329	NRSA63J-220X	MG RESISTOR	22Ω 1/16W J
R3330	NRSA63J-510X	MG RESISTOR	51Ω 1/16W J
R3331	NRSA63J-220X	MG RESISTOR	22Ω 1/16W J
R3332	NRSA63J-510X	MG RESISTOR	51Ω 1/16W J
R3334	NRSA63J-220X	MG RESISTOR	22Ω 1/16W J
R3335	NRSA63J-510X	MG RESISTOR	51Ω 1/16W J
R3336	NRSA63J-220X	MG RESISTOR	22Ω 1/16W J
R3338	NRSA63J-101X	MG RESISTOR	100Ω 1/16W J
R3339	NRSA63J-220X	MG RESISTOR	22Ω 1/16W J
R3341	NRSA63J-0R0X	MG RESISTOR	0Ω 1/16W J
R3342	NRSA63J-220X	MG RESISTOR	22Ω 1/16W J
R3343	NRSA63J-100X	MG RESISTOR	10Ω 1/16W J
R3345	NRSA63J-472X	MG RESISTOR	4.7kΩ 1/16W J
R3347	NRSA63J-100X	MG RESISTOR	10Ω 1/16W J
R3348	NRSA63J-220X	MG RESISTOR	22Ω 1/16W J
R3350	NRSA63J-472X	MG RESISTOR	4.7kΩ 1/16W J
R3351	NRSA63J-472X	MG RESISTOR	4.7kΩ 1/16W J
R3352	NRSA63J-0R0X	MG RESISTOR	0Ω 1/16W J
R3353	NRSA63J-220X	MG RESISTOR	22Ω 1/16W J
R3354	NRSA63J-220X	MG RESISTOR	22Ω 1/16W J
R3355	NRSA63J-472X	MG RESISTOR	4.7kΩ 1/16W J
R3356	NRSA63J-0R0X	MG RESISTOR	0Ω 1/16W J
R3357	NRZ0040-510X	NET RESISTOR	51Ω 1/16W J x4
R3358	NRZ0040-510X	NET RESISTOR	51Ω 1/16W J x4
R3359	NRZ0040-510X	NET RESISTOR	51Ω 1/16W J x4
R3360	NRZ0040-510X	NET RESISTOR	51Ω 1/16W J x4
R3361	NRZ0040-510X	NET RESISTOR	51Ω 1/16W J x4
R3362	NRZ0040-510X	NET RESISTOR	51Ω 1/16W J x4
R3363	NRZ0040-510X	NET RESISTOR	51Ω 1/16W J x4
R3364	NRZ0040-510X	NET RESISTOR	51Ω 1/16W J x4
R3365	NRZ0040-510X	NET RESISTOR	51Ω 1/16W J x4
R3366	NRZ0040-510X	NET RESISTOR	51Ω 1/16W J x4
R3367	NRZ0040-510X	NET RESISTOR	51Ω 1/16W J x4
R3368	NRZ0040-510X	NET RESISTOR	51Ω 1/16W J x4
R3369	NRZ0040-510X	NET RESISTOR	51Ω 1/16W J x4
R3370	NRZ0040-510X	NET RESISTOR	51Ω 1/16W J x4
R3371	NRZ0040-510X	NET RESISTOR	51Ω 1/16W J x4
R3372	NRZ0040-510X	NET RESISTOR	51Ω 1/16W J x4
R3373	NRSA63J-0R0X	MG RESISTOR	0Ω 1/16W J
R3376	NRZ0040-220X	NET RESISTOR	22Ω 1/16W J x4
R3377	NRZ0040-510X	NET RESISTOR	51Ω 1/16W J x4
R3378	NRZ0040-220X	NET RESISTOR	22Ω 1/16W J x4
R3379	NRZ0040-510X	NET RESISTOR	51Ω 1/16W J x4
R3380	NRZ0040-220X	NET RESISTOR	22Ω 1/16W J x4
R3381	NRZ0040-510X	NET RESISTOR	51Ω 1/16W J x4
R3382	NRZ0040-220X	NET RESISTOR	22Ω 1/16W J x4
R3383	NRZ0040-510X	NET RESISTOR	51Ω 1/16W J x4
R3384	NRZ0040-220X	NET RESISTOR	22Ω 1/16W J x4
R3385	NRZ0040-510X	NET RESISTOR	51Ω 1/16W J x4
R3386	NRZ0040-220X	NET RESISTOR	22Ω 1/16W J x4
R3387	NRZ0040-510X	NET RESISTOR	51Ω 1/16W J x4
R3388	NRZ0040-220X	NET RESISTOR	22Ω 1/16W J x4
R3389	NRZ0040-510X	NET RESISTOR	51Ω 1/16W J x4
R3390	NRZ0040-220X	NET RESISTOR	22Ω 1/16W J x4
R3391	NRZ0040-510X	NET RESISTOR	51Ω 1/16W J x4
R3392	NRZ0040-220X	NET RESISTOR	22Ω 1/16W J x4
R3393	NRZ0040-510X	NET RESISTOR	51Ω 1/16W J x4
R3394	NRZ0040-220X	NET RESISTOR	22Ω 1/16W J x4
R3395	NRZ0040-510X	NET RESISTOR	51Ω 1/16W J x4
R3396	NRZ0040-220X	NET RESISTOR	22Ω 1/16W J x4
R3397	NRZ0040-510X	NET RESISTOR	51Ω 1/16W J x4
R3399	NRSA63J-220X	MG RESISTOR	22Ω 1/16W J
R3400	NRSA63J-510X	MG RESISTOR	51Ω 1/16W J
R3401	NRSA63J-220X	MG RESISTOR	22Ω 1/16W J
R3402	NRSA63J-510X	MG RESISTOR	51Ω 1/16W J
R3403	NRSA63J-220X	MG RESISTOR	22Ω 1/16W J
R3404	NRSA63J-510X	MG RESISTOR	51Ω 1/16W J
R3405	NRSA63J-330X	MG RESISTOR	33Ω 1/16W J
R3406	NRSA63J-220X	MG RESISTOR	22Ω 1/16W J
R3407	NRSA63J-510X	MG RESISTOR	51Ω 1/16W J
R3408	NRSA63J-220X	MG RESISTOR	22Ω 1/16W J
R3410	NRSA63J-101X	MG RESISTOR	100Ω 1/16W J
R3411	NRSA63J-220X	MG RESISTOR	22Ω 1/16W J
R3415	NRSA63J-472X	MG RESISTOR	4.7kΩ 1/16W J
R3417	NRSA63J-472X	MG RESISTOR	4.7kΩ 1/16W J
R3419	NRSA63J-472X	MG RESISTOR	4.7kΩ 1/16W J
R3420	NRSA63J-472X	MG RESISTOR	4.7kΩ 1/16W J
R3422	NQR0499-001X	FERRITE BEADS	
R3423	NQR0499-001X	FERRITE BEADS	
R3424	NRSA63J-0R0X	MG RESISTOR	0Ω 1/16W J
R3425	NRSA63J-105X	MG RESISTOR	1MΩ 1/16W J
R3426	NRSA63J-0R0X	MG RESISTOR	0Ω 1/16W J
R3427	NRSA63J-220X	MG RESISTOR	22Ω 1/16W J
R3430	NRSA63J-470X	MG RESISTOR	47Ω 1/16W J
R3431	NRSA63J-470X	MG RESISTOR	47Ω 1/16W J
R3432	NRSA02J-0R0X	MG RESISTOR	0Ω 1/10W J
R3433	NRSA02J-0R0X	MG RESISTOR	0Ω 1/10W J
R3434	NRSA02J-0R0X	MG RESISTOR	0Ω 1/10W J
R3435	NRSA02J-0R0X	MG RESISTOR	0Ω 1/10W J
R3436	NRSA63J-0R0X	MG RESISTOR	0Ω 1/16W J
R3437	NRSA63J-0R0X	MG RESISTOR	0Ω 1/16W J
R3438	NRSA63J-0R0X	MG RESISTOR	0Ω 1/16W J
R3439	NRSA63J-0R0X	MG RESISTOR	0Ω 1/16W J
R3441	NRSA63J-0R0X	MG RESISTOR	0Ω 1/16W J
R3442	NRSA63J-0R0X	MG RESISTOR	0Ω 1/16W J
R3443	NRVA63D-302X	CMF RESISTOR	3kΩ 1/16W D
R3446	NRVA63D-102X	CMF RESISTOR	1kΩ 1/16W D
R3447	NRVA63D-202X	CMF RESISTOR	2kΩ 1/16W D
R3448	NRVA63D-102X	CMF RESISTOR	1kΩ 1/16W D
R3449	NRVA63D-202X	CMF RESISTOR	2kΩ 1/16W D
R3453	NRVA63D-102X	CMF RESISTOR	1kΩ 1/16W D
R3454	NRVA63D-202X	CMF RESISTOR	2kΩ 1/16W D
R3455	NRVA63D-102X	CMF RESISTOR	1kΩ 1/16W D
R3456	NRVA63D-102X	CMF RESISTOR	1kΩ 1/16W D
R3457	NRVA63D-202X	CMF RESISTOR	2kΩ 1/16W D
R3458	NRSA63J-330X	MG RESISTOR	33Ω 1/16W J
R3459	NRVA63D-102X	CMF RESISTOR	1kΩ 1/16W D
R3460	NRVA63D-102X	CMF RESISTOR	1kΩ 1/16W D
R3461	NRSA63J-0R0X	MG RESISTOR	0Ω 1/16W J
R3462	NRSA63J-510X	MG RESISTOR	51Ω 1/16W J
R3463	NRSA63J-510X	MG RESISTOR	51Ω 1/16W J
R3464	NRZ0040-510X	NET RESISTOR	51Ω 1/16W J x4
R3465	NRZ0040-510X	NET RESISTOR	51Ω 1/16W J x4
R3466	NRSA63J-510X	MG RESISTOR	51Ω 1/16W J
R3467	NRSA63J-510X	MG RESISTOR	51Ω 1/16W J
R3468	NRZ0040-510X	NET RESISTOR	51Ω 1/16W J x4
R3469	NRZ0040-510X	NET RESISTOR	51Ω 1/16W J x4
R3470	NRSA63J-510X	MG RESISTOR	51Ω 1/16W J
R3471	NRSA63J-510X	MG RESISTOR	51Ω 1/16W J
R3472	NRSA63J-510X	MG RESISTOR	51Ω 1/16W J
R3473	NRSA63J-510X	MG RESISTOR	51Ω 1/16W J
R3474	NRSA63J-510X	MG RESISTOR	51Ω 1/16W J
R3475	NRSA63J-510X	MG RESISTOR	51Ω 1/16W J
R3476	NRSA63J-510X	MG RESISTOR	51Ω 1/16W J
R3477	NRSA63J-510X	MG RESISTOR	51Ω 1/16W J
R3478	NRSA63J-510X	MG RESISTOR	51Ω 1/16W J
R3479	NRSA63J-510X	MG RESISTOR	51Ω 1/16W J
R3480	NRSA63J-510X	MG RESISTOR	51Ω 1/16W J
R3483	NRSA63J-0R0X	MG RESISTOR	0Ω 1/16W J
R3484	NRSA63J-0R0X	MG RESISTOR	0Ω 1/16W J
R3485	NRSA63J-0R0X	MG RESISTOR	0Ω 1/16W J
R3486	NRSA63J-0R0X	MG RESISTOR	0Ω 1/16W J
R3489	NRSA63J-0R0X	MG RESISTOR	0Ω 1/16W J
R3490	NRSA63J-0R0X	MG RESISTOR	0Ω 1/16W J
R3491	NRSA63J-0R0X	MG RESISTOR	0Ω 1/16W J
R3492	NRSA63J-0R0X	MG RESISTOR	0Ω 1/16W J
R3495	NRSA63J-0R0X	MG RESISTOR	0Ω 1/16W J
R3496	NRSA63J-0R0X	MG RESISTOR	0Ω 1/16W J
R3497	NRSA63J-0R0X	MG RESISTOR	0Ω 1/16W J
R3498	NRSA63J-0R0X	MG RESISTOR	0Ω 1/16W J
R3499	NRSA63J-0R0X	MG RESISTOR	0Ω 1/16W J
R3501	NRSA63J-0R0X	MG RESISTOR	0Ω 1/16W J
R3504	NRZ0040-220X	NET RESISTOR	22Ω 1/16W J x4
R3505	NRZ0040-510X	NET RESISTOR	51Ω 1/16W J x4
R3506	NRZ0040-220X	NET RESISTOR	22Ω 1/16W J x4
R3507	NRZ0040-510X	NET RESISTOR	51Ω 1/16W J x4

⚠Ref No.	Part No.	Part Name	Description Local
R3508	NRZ0040-220X	NET RESISTOR	22Ω 1/16W J x4
R3509	NRZ0040-510X	NET RESISTOR	51Ω 1/16W J x4
R3510	NRZ0040-220X	NET RESISTOR	22Ω 1/16W J x4
R3511	NRZ0040-510X	NET RESISTOR	51Ω 1/16W J x4
R3512	NRZ0040-220X	NET RESISTOR	22Ω 1/16W J x4
R3513	NRZ0040-510X	NET RESISTOR	51Ω 1/16W J x4
R3514	NRZ0040-220X	NET RESISTOR	22Ω 1/16W J x4
R3515	NRZ0040-510X	NET RESISTOR	51Ω 1/16W J x4
R3516	NRZ0040-220X	NET RESISTOR	22Ω 1/16W J x4
R3517	NRZ0040-510X	NET RESISTOR	51Ω 1/16W J x4
R3518	NRZ0040-220X	NET RESISTOR	22Ω 1/16W J x4
R3519	NRZ0040-510X	NET RESISTOR	51Ω 1/16W J x4
R3520	NRZ0040-220X	NET RESISTOR	22Ω 1/16W J x4
R3521	NRZ0040-510X	NET RESISTOR	51Ω 1/16W J x4
R3522	NRZ0040-220X	NET RESISTOR	22Ω 1/16W J x4
R3523	NRZ0040-510X	NET RESISTOR	51Ω 1/16W J x4
R3524	NRZ0040-220X	NET RESISTOR	22Ω 1/16W J x4
R3525	NRZ0040-510X	NET RESISTOR	51Ω 1/16W J x4
R3527	NRSA63J-220X	MG RESISTOR	22Ω 1/16W J
R3528	NRSA63J-510X	MG RESISTOR	51Ω 1/16W J
R3529	NRSA63J-220X	MG RESISTOR	22Ω 1/16W J
R3530	NRSA63J-510X	MG RESISTOR	51Ω 1/16W J
R3531	NRSA63J-220X	MG RESISTOR	22Ω 1/16W J
R3532	NRSA63J-510X	MG RESISTOR	51Ω 1/16W J
R3534	NRSA63J-220X	MG RESISTOR	22Ω 1/16W J
R3535	NRSA63J-510X	MG RESISTOR	51Ω 1/16W J
R3536	NRSA63J-220X	MG RESISTOR	22Ω 1/16W J
R3538	NRSA63J-101X	MG RESISTOR	100Ω 1/16W J
R3539	NRSA63J-220X	MG RESISTOR	22Ω 1/16W J
R3541	NRSA63J-0R0X	MG RESISTOR	0Ω 1/16W J
R3542	NRSA63J-220X	MG RESISTOR	22Ω 1/16W J
R3543	NRSA63J-220X	MG RESISTOR	22Ω 1/16W J
R3546	NRSA63J-472X	MG RESISTOR	4.7kΩ 1/16W J
R3547	NRSA63J-220X	MG RESISTOR	22Ω 1/16W J
R3548	NRSA63J-220X	MG RESISTOR	22Ω 1/16W J
R3550	NRSA63J-472X	MG RESISTOR	4.7kΩ 1/16W J
R3551	NRSA63J-472X	MG RESISTOR	4.7kΩ 1/16W J
R3552	NRSA63J-0R0X	MG RESISTOR	0Ω 1/16W J
R3553	NRSA63J-220X	MG RESISTOR	22Ω 1/16W J
R3554	NRSA63J-220X	MG RESISTOR	22Ω 1/16W J
R3555	NRSA63J-472X	MG RESISTOR	4.7kΩ 1/16W J
R3556	NRSA63J-0R0X	MG RESISTOR	0Ω 1/16W J
R3557	NRZ0040-510X	NET RESISTOR	51Ω 1/16W J x4
R3558	NRZ0040-510X	NET RESISTOR	51Ω 1/16W J x4
R3559	NRZ0040-510X	NET RESISTOR	51Ω 1/16W J x4
R3560	NRZ0040-510X	NET RESISTOR	51Ω 1/16W J x4
R3561	NRZ0040-510X	NET RESISTOR	51Ω 1/16W J x4
R3562	NRZ0040-510X	NET RESISTOR	51Ω 1/16W J x4
R3563	NRZ0040-510X	NET RESISTOR	51Ω 1/16W J x4
R3564	NRZ0040-510X	NET RESISTOR	51Ω 1/16W J x4
R3565	NRZ0040-510X	NET RESISTOR	51Ω 1/16W J x4
R3566	NRZ0040-510X	NET RESISTOR	51Ω 1/16W J x4
R3567	NRZ0040-510X	NET RESISTOR	51Ω 1/16W J x4
R3568	NRZ0040-510X	NET RESISTOR	51Ω 1/16W J x4
R3569	NRZ0040-510X	NET RESISTOR	51Ω 1/16W J x4
R3570	NRZ0040-510X	NET RESISTOR	51Ω 1/16W J x4
R3571	NRZ0040-510X	NET RESISTOR	51Ω 1/16W J x4
R3572	NRZ0040-510X	NET RESISTOR	51Ω 1/16W J x4
R3573	NRSA63J-0R0X	MG RESISTOR	0Ω 1/16W J
R3576	NRZ0040-220X	NET RESISTOR	22Ω 1/16W J x4
R3577	NRZ0040-510X	NET RESISTOR	51Ω 1/16W J x4
R3578	NRZ0040-220X	NET RESISTOR	22Ω 1/16W J x4
R3579	NRZ0040-510X	NET RESISTOR	51Ω 1/16W J x4
R3580	NRZ0040-220X	NET RESISTOR	22Ω 1/16W J x4
R3581	NRZ0040-510X	NET RESISTOR	51Ω 1/16W J x4
R3582	NRZ0040-220X	NET RESISTOR	22Ω 1/16W J x4
R3583	NRZ0040-510X	NET RESISTOR	51Ω 1/16W J x4
R3584	NRZ0040-220X	NET RESISTOR	22Ω 1/16W J x4
R3585	NRZ0040-510X	NET RESISTOR	51Ω 1/16W J x4
R3586	NRZ0040-220X	NET RESISTOR	22Ω 1/16W J x4
R3587	NRZ0040-510X	NET RESISTOR	51Ω 1/16W J x4
R3588	NRZ0040-220X	NET RESISTOR	22Ω 1/16W J x4
R3589	NRZ0040-510X	NET RESISTOR	51Ω 1/16W J x4
R3590	NRZ0040-220X	NET RESISTOR	22Ω 1/16W J x4
R3591	NRZ0040-510X	NET RESISTOR	51Ω 1/16W J x4
R3592	NRZ0040-220X	NET RESISTOR	22Ω 1/16W J x4
R3593	NRZ0040-510X	NET RESISTOR	51Ω 1/16W J x4
R3594	NRZ0040-220X	NET RESISTOR	22Ω 1/16W J x4
R3595	NRZ0040-510X	NET RESISTOR	51Ω 1/16W J x4
R3596	NRZ0040-220X	NET RESISTOR	22Ω 1/16W J x4
R3597	NRZ0040-510X	NET RESISTOR	51Ω 1/16W J x4
R3599	NRSA63J-220X	MG RESISTOR	22Ω 1/16W J
R3600	NRSA63J-510X	MG RESISTOR	51Ω 1/16W J
R3601	NRSA63J-220X	MG RESISTOR	22Ω 1/16W J
R3602	NRSA63J-510X	MG RESISTOR	51Ω 1/16W J
R3603	NRSA63J-220X	MG RESISTOR	22Ω 1/16W J
R3604	NRSA63J-510X	MG RESISTOR	51Ω 1/16W J
R3605	NRSA63J-150X	MG RESISTOR	15Ω 1/16W J
R3606	NRSA63J-220X	MG RESISTOR	22Ω 1/16W J
R3607	NRSA63J-510X	MG RESISTOR	51Ω 1/16W J

⚠Ref No.	Part No.	Part Name	Description Local
R3608	NRSA63J-220X	MG RESISTOR	22Ω 1/16W J
R3610	NRSA63J-101X	MG RESISTOR	100Ω 1/16W J
R3611	NRSA63J-220X	MG RESISTOR	22Ω 1/16W J
R3615	NRSA63J-472X	MG RESISTOR	4.7kΩ 1/16W J
R3617	NRSA63J-472X	MG RESISTOR	4.7kΩ 1/16W J
R3619	NRSA63J-472X	MG RESISTOR	4.7kΩ 1/16W J
R3621	NRSA63J-472X	MG RESISTOR	4.7kΩ 1/16W J
R3622	NQR0499-001X	FERRITE BEADS	
R3623	NQR0499-001X	FERRITE BEADS	
R3627	NRSA63J-220X	MG RESISTOR	22Ω 1/16W J
R3629	NRSA63J-0R0X	MG RESISTOR	0Ω 1/16W J
R3632	NRSA02J-0R0X	MG RESISTOR	0Ω 1/10W J
R3633	NRSA02J-0R0X	MG RESISTOR	0Ω 1/10W J
R3634	NRSA02J-0R0X	MG RESISTOR	0Ω 1/10W J
R3635	NRSA02J-0R0X	MG RESISTOR	0Ω 1/10W J
R3636	NRSA63J-0R0X	MG RESISTOR	0Ω 1/16W J
R3637	NRSA63J-0R0X	MG RESISTOR	0Ω 1/16W J
R3638	NRSA63J-0R0X	MG RESISTOR	0Ω 1/16W J
R3639	NRSA63J-0R0X	MG RESISTOR	0Ω 1/16W J
R3641	NRSA63J-0R0X	MG RESISTOR	0Ω 1/16W J
R3642	NRSA63J-0R0X	MG RESISTOR	0Ω 1/16W J
R3643	NRVA63D-302X	CMF RESISTOR	3kΩ 1/16W D
R3646	NRVA63D-102X	CMF RESISTOR	1kΩ 1/16W D
R3647	NRVA63D-202X	CMF RESISTOR	2kΩ 1/16W D
R3648	NRVA63D-102X	CMF RESISTOR	1kΩ 1/16W D
R3649	NRVA63D-202X	CMF RESISTOR	2kΩ 1/16W D
R3653	NRVA63D-102X	CMF RESISTOR	1kΩ 1/16W D
R3654	NRVA63D-202X	CMF RESISTOR	2kΩ 1/16W D
R3655	NRVA63D-102X	CMF RESISTOR	1kΩ 1/16W D
R3656	NRVA63D-102X	CMF RESISTOR	1kΩ 1/16W D
R3657	NRVA63D-202X	CMF RESISTOR	2kΩ 1/16W D
R3658	NRSA63J-330X	MG RESISTOR	33Ω 1/16W J
R3659	NRVA63D-102X	CMF RESISTOR	1kΩ 1/16W D
R3660	NRVA63D-102X	CMF RESISTOR	1kΩ 1/16W D
R3661	NRSA63J-0R0X	MG RESISTOR	0Ω 1/16W J
R3674	NRSA63J-510X	MG RESISTOR	51Ω 1/16W J
R3675	NRSA63J-510X	MG RESISTOR	51Ω 1/16W J
R3676	NRSA63J-510X	MG RESISTOR	51Ω 1/16W J
R3677	NRSA63J-510X	MG RESISTOR	51Ω 1/16W J
R3678	NRSA63J-510X	MG RESISTOR	51Ω 1/16W J
R3679	NRSA63J-510X	MG RESISTOR	51Ω 1/16W J
R3680	NRSA63J-510X	MG RESISTOR	51Ω 1/16W J
R3683	NRSA63J-0R0X	MG RESISTOR	0Ω 1/16W J
R3684	NRSA63J-0R0X	MG RESISTOR	0Ω 1/16W J
R3685	NRSA63J-0R0X	MG RESISTOR	0Ω 1/16W J
R3686	NRSA63J-0R0X	MG RESISTOR	0Ω 1/16W J
R3689	NRSA63J-0R0X	MG RESISTOR	0Ω 1/16W J
R3690	NRSA63J-0R0X	MG RESISTOR	0Ω 1/16W J
R3691	NRSA63J-0R0X	MG RESISTOR	0Ω 1/16W J
R3692	NRSA63J-0R0X	MG RESISTOR	0Ω 1/16W J
R3695	NRSA63J-0R0X	MG RESISTOR	0Ω 1/16W J
R3696	NRSA63J-0R0X	MG RESISTOR	0Ω 1/16W J
R3697	NRSA63J-0R0X	MG RESISTOR	0Ω 1/16W J
R3698	NRSA63J-0R0X	MG RESISTOR	0Ω 1/16W J
R3699	NRSA63J-0R0X	MG RESISTOR	0Ω 1/16W J
R3701	NRSA63J-102X	MG RESISTOR	1kΩ 1/16W J
R3702	NRZ0040-101X	NET RESISTOR	100Ω 1/16W J x4
R3703	NRZ0040-472X	NET RESISTOR	4.7kΩ 1/16W J x4
R3704	NRZ0040-101X	NET RESISTOR	100Ω 1/16W J x4
R3705	NRSA63J-472X	MG RESISTOR	4.7kΩ 1/16W J
R3706	NRSA63J-103X	MG RESISTOR	10kΩ 1/16W J
R3707	NRSA63J-101X	MG RESISTOR	100Ω 1/16W J
R3708	NRSA63J-103X	MG RESISTOR	10kΩ 1/16W J
R3709	NRSA63J-101X	MG RESISTOR	100Ω 1/16W J
R3710	NRSA63J-105X	MG RESISTOR	1MΩ 1/16W J
R3711	NRSA63J-0R0X	MG RESISTOR	0Ω 1/16W J
R3712	NRSA63J-103X	MG RESISTOR	10kΩ 1/16W J
R3713	NRSA63J-101X	MG RESISTOR	100Ω 1/16W J
R3714	NRSA63J-103X	MG RESISTOR	10kΩ 1/16W J
R3715	NRSA63J-101X	MG RESISTOR	100Ω 1/16W J
R3716	NRSA63J-472X	MG RESISTOR	4.7kΩ 1/16W J
R3717	NRSA63J-103X	MG RESISTOR	10kΩ 1/16W J
R3718	NRSA63J-0R0X	MG RESISTOR	0Ω 1/16W J
R3719	NRSA63J-101X	MG RESISTOR	100Ω 1/16W J
R3720	NRSA63J-101X	MG RESISTOR	100Ω 1/16W J
R3722	NRSA63J-821X	MG RESISTOR	820Ω 1/16W J
R3723	NRSA63J-821X	MG RESISTOR	820Ω 1/16W J
R3724	NRSA63J-0R0X	MG RESISTOR	0Ω 1/16W J
R3725	NRSA63J-0R0X	MG RESISTOR	0Ω 1/16W J
R3726	NRSA63J-0R0X	MG RESISTOR	0Ω 1/16W J
R3727	NRSA63J-0R0X	MG RESISTOR	0Ω 1/16W J
R3728	NRZ0040-103X	NET RESISTOR	10kΩ 1/16W J x4
R3729	NRZ0040-101X	NET RESISTOR	100Ω 1/16W J x4
R3730	NRSA63J-101X	MG RESISTOR	100Ω 1/16W J
R3731	NRSA63J-472X	MG RESISTOR	4.7kΩ 1/16W J
R3732	NRZ0040-103X	NET RESISTOR	10kΩ 1/16W J x4
R3733	NRZ0040-101X	NET RESISTOR	100Ω 1/16W J x4
R3734	NRZ0040-101X	NET RESISTOR	100Ω 1/16W J x4
R3735	NRZ0040-472X	NET RESISTOR	4.7kΩ 1/16W J x4
R3736	NRSA63J-101X	MG RESISTOR	100Ω 1/16W J

⚠Ref No.	Part No.	Part Name	Description	Local
R3737	NRSA63J-101X	MG RESISTOR	100Ω 1/16W J	
R3738	NRSA63J-0R0X	MG RESISTOR	0Ω 1/16W J	
R3739	NRSA63J-0R0X	MG RESISTOR	0Ω 1/16W J	
R3740	NRSA63J-0R0X	MG RESISTOR	0Ω 1/16W J	
R3741	NRSA63J-103X	MG RESISTOR	10kΩ 1/16W J	
R3742	NRSA63J-0R0X	MG RESISTOR	0Ω 1/16W J	
R3743	NRSA63J-0R0X	MG RESISTOR	0Ω 1/16W J	
R3752	NRSA63J-332X	MG RESISTOR	3.3kΩ 1/16W J	
R3753	NRSA63J-470X	MG RESISTOR	47Ω 1/16W J	
R3755	NRSA63J-472X	MG RESISTOR	4.7kΩ 1/16W J	
R3756	NRSA63J-472X	MG RESISTOR	4.7kΩ 1/16W J	
R3757	NRSA63J-0R0X	MG RESISTOR	0Ω 1/16W J	
R3758	NRSA63J-472X	MG RESISTOR	4.7kΩ 1/16W J	
R3759	NRSA63J-472X	MG RESISTOR	4.7kΩ 1/16W J	
R3760	NRSA63J-472X	MG RESISTOR	4.7kΩ 1/16W J	
R3761	NRSA63J-103X	MG RESISTOR	10kΩ 1/16W J	
R3763	NRSA63J-101X	MG RESISTOR	100Ω 1/16W J	
R3765	NRSA63J-0R0X	MG RESISTOR	0Ω 1/16W J	
R3766	NRSA63J-103X	MG RESISTOR	10kΩ 1/16W J	
R3767	NRSA63J-0R0X	MG RESISTOR	0Ω 1/16W J	
R3770	NRSA63J-0R0X	MG RESISTOR	0Ω 1/16W J	
R3771	NRSA63J-101X	MG RESISTOR	100Ω 1/16W J	
R3772	NRSA63J-103X	MG RESISTOR	10kΩ 1/16W J	
R3773	NRSA63J-0R0X	MG RESISTOR	0Ω 1/16W J	
R3776	NRSA63J-0R0X	MG RESISTOR	0Ω 1/16W J	
R3777	NRSA63J-561X	MG RESISTOR	560Ω 1/16W J	
R3778	NRSA63J-121X	MG RESISTOR	120Ω 1/16W J	
R3779	NRSA63J-121X	MG RESISTOR	120Ω 1/16W J	
R3801	NRSA63J-0R0X	MG RESISTOR	0Ω 1/16W J	
R3802	NRSA63J-0R0X	MG RESISTOR	0Ω 1/16W J	
R3803	NRSA63J-0R0X	MG RESISTOR	0Ω 1/16W J	
R3804	NRSA63J-0R0X	MG RESISTOR	0Ω 1/16W J	
R3805	NRSA63J-0R0X	MG RESISTOR	0Ω 1/16W J	
R3806	NRSA63J-0R0X	MG RESISTOR	0Ω 1/16W J	
R3807	NRSA63J-0R0X	MG RESISTOR	0Ω 1/16W J	
R3808	NRSA63J-0R0X	MG RESISTOR	0Ω 1/16W J	
R3809	NRSA63J-0R0X	MG RESISTOR	0Ω 1/16W J	
R3810	NRSA63J-0R0X	MG RESISTOR	0Ω 1/16W J	
R3811	NRSA63J-0R0X	MG RESISTOR	0Ω 1/16W J	
R3812	NRSA63J-0R0X	MG RESISTOR	0Ω 1/16W J	
R3815	NRZ0040-220X	NET RESISTOR	22Ω 1/16W J x4	
R3816	NRZ0040-510X	NET RESISTOR	51Ω 1/16W J x4	
R3819	NRZ0040-220X	NET RESISTOR	22Ω 1/16W J x4	
R3820	NRZ0040-510X	NET RESISTOR	51Ω 1/16W J x4	
R3823	NRZ0040-220X	NET RESISTOR	22Ω 1/16W J x4	
R3824	NRZ0040-510X	NET RESISTOR	51Ω 1/16W J x4	
R3827	NRZ0040-220X	NET RESISTOR	22Ω 1/16W J x4	
R3828	NRZ0040-510X	NET RESISTOR	51Ω 1/16W J x4	
R3831	NRZ0040-220X	NET RESISTOR	22Ω 1/16W J x4	
R3832	NRZ0040-510X	NET RESISTOR	51Ω 1/16W J x4	
R3835	NRZ0040-220X	NET RESISTOR	22Ω 1/16W J x4	
R3836	NRZ0040-510X	NET RESISTOR	51Ω 1/16W J x4	
R3851	NRSA63J-220X	MG RESISTOR	22Ω 1/16W J	
R3852	NRSA63J-220X	MG RESISTOR	22Ω 1/16W J	
R3853	NRSA63J-220X	MG RESISTOR	22Ω 1/16W J	
R3854	NRSA63J-220X	MG RESISTOR	22Ω 1/16W J	
R3855	NRSA63J-510X	MG RESISTOR	51Ω 1/16W J	
R3856	NRSA63J-510X	MG RESISTOR	51Ω 1/16W J	
R3857	NRSA63J-510X	MG RESISTOR	51Ω 1/16W J	
R3858	NRSA63J-510X	MG RESISTOR	51Ω 1/16W J	
R3859	NRSA63J-220X	MG RESISTOR	22Ω 1/16W J	
R3860	NRSA63J-220X	MG RESISTOR	22Ω 1/16W J	
R3861	NRSA63J-220X	MG RESISTOR	22Ω 1/16W J	
R3862	NRSA63J-220X	MG RESISTOR	22Ω 1/16W J	
R3863	NRSA63J-510X	MG RESISTOR	51Ω 1/16W J	
R3864	NRSA63J-510X	MG RESISTOR	51Ω 1/16W J	
R3865	NRSA63J-510X	MG RESISTOR	51Ω 1/16W J	
R3866	NRSA63J-510X	MG RESISTOR	51Ω 1/16W J	
R3867	NRSA63J-510X	MG RESISTOR	51Ω 1/16W J	
R3868	NRSA63J-510X	MG RESISTOR	51Ω 1/16W J	
R3869	NRSA63J-220X	MG RESISTOR	22Ω 1/16W J	
R3870	NRSA63J-220X	MG RESISTOR	22Ω 1/16W J	
R3871	NRSA63J-220X	MG RESISTOR	22Ω 1/16W J	
R3872	NRSA63J-220X	MG RESISTOR	22Ω 1/16W J	
R3873	NRSA63J-510X	MG RESISTOR	51Ω 1/16W J	
R3874	NRSA63J-510X	MG RESISTOR	51Ω 1/16W J	
R3875	NRSA63J-510X	MG RESISTOR	51Ω 1/16W J	
R3876	NRSA63J-510X	MG RESISTOR	51Ω 1/16W J	
R3877	NRSA63J-220X	MG RESISTOR	22Ω 1/16W J	
R3878	NRSA63J-220X	MG RESISTOR	22Ω 1/16W J	
R3879	NRSA63J-220X	MG RESISTOR	22Ω 1/16W J	
R3880	NRSA63J-220X	MG RESISTOR	22Ω 1/16W J	
R3881	NRSA63J-510X	MG RESISTOR	51Ω 1/16W J	
R3882	NRSA63J-510X	MG RESISTOR	51Ω 1/16W J	
R3883	NRSA63J-510X	MG RESISTOR	51Ω 1/16W J	
R3884	NRSA63J-510X	MG RESISTOR	51Ω 1/16W J	
R3885	NRSA63J-220X	MG RESISTOR	22Ω 1/16W J	
R3886	NRSA63J-220X	MG RESISTOR	22Ω 1/16W J	
R3887	NRSA63J-220X	MG RESISTOR	22Ω 1/16W J	
R3888	NRSA63J-220X	MG RESISTOR	22Ω 1/16W J	
R3889	NRSA63J-510X	MG RESISTOR	51Ω 1/16W J	
R3890	NRSA63J-510X	MG RESISTOR	51Ω 1/16W J	
R3891	NRSA63J-510X	MG RESISTOR	51Ω 1/16W J	
R3892	NRSA63J-510X	MG RESISTOR	51Ω 1/16W J	
R3893	NRSA63J-220X	MG RESISTOR	22Ω 1/16W J	
R3894	NRSA63J-220X	MG RESISTOR	22Ω 1/16W J	
R3895	NRSA63J-220X	MG RESISTOR	22Ω 1/16W J	
R3896	NRSA63J-220X	MG RESISTOR	22Ω 1/16W J	
R3897	NRSA63J-510X	MG RESISTOR	51Ω 1/16W J	
R3898	NRSA63J-510X	MG RESISTOR	51Ω 1/16W J	
R3901	NRSA63J-1R0X	MG RESISTOR	1Ω 1/16W J	
R3902	NRSA63J-751X	MG RESISTOR	750Ω 1/16W J	
R3903	NRSA63D-272X	MG RESISTOR	2.7kΩ 1/16W D	
R3904	NRSA63D-202X	MG RESISTOR	2kΩ 1/16W D	
R3905	NRSA63J-473X	MG RESISTOR	47kΩ 1/16W J	
R3906	NRSA63D-222X	MG RESISTOR	2.2kΩ 1/16W D	
R3908	NRSA63J-104X	MG RESISTOR	100kΩ 1/16W J	
R3909	NRSA63J-102X	MG RESISTOR	1kΩ 1/16W J	
R3910	NRSA63J-473X	MG RESISTOR	47kΩ 1/16W J	
R3911	NRSA63J-180X	MG RESISTOR	18Ω 1/16W J	
R3912	NRSA63J-1R0X	MG RESISTOR	1Ω 1/16W J	
R3913	NRZ0093-R010X	MP RESISTOR	0.01Ω	
R3914	NRSA02J-0R0X	MG RESISTOR	0Ω 1/10W J	
R3915	NRSA02J-0R0X	MG RESISTOR	0Ω 1/10W J	
R3916	NRSA02J-0R0X	MG RESISTOR	0Ω 1/10W J	
R3917	NRSA63J-471X	MG RESISTOR	470Ω 1/16W J	
R3918	NRSA63J-0R0X	MG RESISTOR	0Ω 1/16W J	
R3919	NRSA63J-3R9X	MG RESISTOR	3.9Ω 1/16W J	
R3920	NRSA63J-560X	MG RESISTOR	56Ω 1/16W J	
R3921	NRSA02J-0R0X	MG RESISTOR	0Ω 1/10W J	
R3922	NRSA63J-0R0X	MG RESISTOR	0Ω 1/16W J	
R3923	NRSA63J-100X	MG RESISTOR	10Ω 1/16W J	
R3924	NRSA63J-100X	MG RESISTOR	10Ω 1/16W J	
R3931	NRSA63J-102X	MG RESISTOR	1kΩ 1/16W J	
R3932	NRSA63J-332X	MG RESISTOR	3.3kΩ 1/16W J	
R3933	NRSA63D-122X	MG RESISTOR	1.2kΩ 1/16W D	
R3934	NRSA63D-822X	MG RESISTOR	8.2kΩ 1/16W D	
R3935	NRSA63D-332X	MG RESISTOR	3.3kΩ 1/16W D	
R3936	NRSA02J-0R0X	MG RESISTOR	0Ω 1/10W J	
R3937	NRSA02J-0R0X	MG RESISTOR	0Ω 1/10W J	
R3938	NRSA02J-0R0X	MG RESISTOR	0Ω 1/10W J	
R3939	NRSA63J-102X	MG RESISTOR	1kΩ 1/16W J	
R3940	NRSA63J-103X	MG RESISTOR	10kΩ 1/16W J	
R3941	NRSA63J-103X	MG RESISTOR	10kΩ 1/16W J	
R3942	NRSA63J-103X	MG RESISTOR	10kΩ 1/16W J	
R3943	NRSA63J-103X	MG RESISTOR	10kΩ 1/16W J	
R3944	NRSA63J-103X	MG RESISTOR	10kΩ 1/16W J	
R3945	NRSA63J-103X	MG RESISTOR	10kΩ 1/16W J	
R3946	NRSA63J-103X	MG RESISTOR	10kΩ 1/16W J	
R3947	NRSA63J-103X	MG RESISTOR	10kΩ 1/16W J	
R3948	NRSA63J-103X	MG RESISTOR	10kΩ 1/16W J	
R3949	NRSA63J-103X	MG RESISTOR	10kΩ 1/16W J	
R3950	NRSA63J-103X	MG RESISTOR	10kΩ 1/16W J	
R3951	NRSA63J-103X	MG RESISTOR	10kΩ 1/16W J	
R3953	NRSA63D-472X	MG RESISTOR	4.7kΩ 1/16W D	
R3954	NRSA63J-102X	MG RESISTOR	1kΩ 1/16W J	
R3971	NRSA63J-103X	MG RESISTOR	10kΩ 1/16W J	
R3981	NRS12BJ-102W	MG RESISTOR	1kΩ 1/2W J	
R3982	NRS12BJ-102W	MG RESISTOR	1kΩ 1/2W J	
R3983	NRS12BJ-471W	MG RESISTOR	470Ω 1/2W J	
R3985	NRSA63J-103X	MG RESISTOR	10kΩ 1/16W J	
R3987	NRSA63J-103X	MG RESISTOR	10kΩ 1/16W J	
R3990	NRSA02J-0R0X	MG RESISTOR	0Ω 1/10W J	
R3991	NRSA63J-102X	MG RESISTOR	1kΩ 1/16W J	
R3995	NRSA63J-102X	MG RESISTOR	1kΩ 1/16W J	
R3996	NRSA63J-332X	MG RESISTOR	3.3kΩ 1/16W J	
R3997	NRSA63J-103X	MG RESISTOR	10kΩ 1/16W J	
R8001	NRSA63J-103X	MG RESISTOR	10kΩ 1/16W J	
R8002	NRSA63J-473X	MG RESISTOR	47kΩ 1/16W J	
R8003	NRSA63D-222X	MG RESISTOR	2.2kΩ 1/16W D	
R8004	NRSA63D-681X	MG RESISTOR	680Ω 1/16W D	
R8005	NRSA63D-472X	MG RESISTOR	4.7kΩ 1/16W D	
R8006	NRSA63D-102X	MG RESISTOR	1kΩ 1/16W D	
R8014	NRSA63D-472X	MG RESISTOR	4.7kΩ 1/16W D	
R8015	NRSA63D-681X	MG RESISTOR	680Ω 1/16W D	
R8016	NRSA63D-222X	MG RESISTOR	2.2kΩ 1/16W D	
R8024	NRSA63D-222X	MG RESISTOR	2.2kΩ 1/16W D	
R8025	NRSA63D-681X	MG RESISTOR	680Ω 1/16W D	
R8026	NRSA63D-202X	MG RESISTOR	2kΩ 1/16W D	
R8031	NRSA63J-103X	MG RESISTOR	10kΩ 1/16W J	
R8032	NRSA63J-223X	MG RESISTOR	22kΩ 1/16W J	
R8033	NRSA63J-472X	MG RESISTOR	4.7kΩ 1/16W J	
R8034	NRSA63J-103X	MG RESISTOR	10kΩ 1/16W J	
R8035	NRSA63J-223X	MG RESISTOR	22kΩ 1/16W J	
R8036	NRSA63J-472X	MG RESISTOR	4.7kΩ 1/16W J	
R8041	NRZ0040-103X	NET RESISTOR	10kΩ 1/16W J x4	
R8042	NRZ0040-101X	NET RESISTOR	100Ω 1/16W J x4	
RB3001	NRSA63J-0R0X	MG RESISTOR	0Ω 1/16W J	
RB3002	NRSA63J-0R0X	MG RESISTOR	0Ω 1/16W J	

⚠Ref No.	Part No.	Part Name	Description	Local
L	WJW0031-002A-E	E-TWISTED ASSY		
L3901	NQLD4EM-3R3X	COIL	3.3uH M	
L3931	NQL63EM-101X	COIL	100uH M	
CNB1	QGF0401F1-80W	CONNECTOR	FFC/FPC (1-80)	
CNBG1	QGF0508F5-10X	CONNECTOR	FFC/FPC (1-10)	
CNG1	QGF0401F1-80W	CONNECTOR	FFC/FPC (1-80)	
CNGG1	QGF0508F5-10X	CONNECTOR	FFC/FPC (1-10)	
CNR1	QGF0401F1-80W	CONNECTOR	FFC/FPC (1-80)	
CNRG1	QGF0508F5-10X	CONNECTOR	FFC/FPC (1-10)	
EF3001	NQR0416-002X	EMI FILTER	84pF 16V M	
EF3002	NQR0416-002X	EMI FILTER	84pF 16V M	
EF3003	NQR0470-001X	EMI FILTER	22pF 50V	
EF3701	NQR0470-001X	EMI FILTER	22pF 50V	
EF3702	NQR0416-002X	EMI FILTER	84pF 16V M	
EF3703	NQR0416-002X	EMI FILTER	84pF 16V M	
EF3704	NQR0416-002X	EMI FILTER	84pF 16V M	
EF3705	NQR0470-001X	EMI FILTER	22pF 50V	
EF3706	NQR0470-001X	EMI FILTER	22pF 50V	
EF3707	NQR0483-005X	EMI FILTER	100uF 25V Z	
EF3708	NQR0470-001X	EMI FILTER	22pF 50V	
EF3709	NQR0470-001X	EMI FILTER	22pF 50V	
EF3710	NQR0416-002X	EMI FILTER	84pF 16V M	
EF3711	NQR0470-001X	EMI FILTER	22pF 50V	
EF3713	NQR0483-005X	EMI FILTER	100uF 25V Z	
EF3714	NQR0470-001X	EMI FILTER	22pF 50V	
EF3715	NQR0416-002X	EMI FILTER	84pF 16V M	
EF3901	NQR0483-005X	EMI FILTER	100uF 25V Z	
EF3903	NQR0483-005X	EMI FILTER	100uF 25V Z	
EF3904	NQR0483-005X	EMI FILTER	100uF 25V Z	
EF3905	NQR0483-005X	EMI FILTER	100uF 25V Z	
EF3906	NQR0483-005X	EMI FILTER	100uF 25V Z	
EF3907	NQR0483-005X	EMI FILTER	100uF 25V Z	
EF3909	NQR0470-007X	EMI FILTER	2200pF 50V	
EF3910	NQR0470-007X	EMI FILTER	2200pF 50V	
EF3911	NQR0470-007X	EMI FILTER	2200pF 50V	
EF3912	NQR0470-007X	EMI FILTER	2200pF 50V	
EF3913	NQR0483-005X	EMI FILTER	100uF 25V Z	
EF3914	NQR0470-007X	EMI FILTER	2200pF 50V	
EF3915	NQR0483-005X	EMI FILTER	100uF 25V Z	
EF3916	NQR0470-007X	EMI FILTER	2200pF 50V	
EF3917	NQR0483-005X	EMI FILTER	100uF 25V Z	
K3001	NQR0504-001X	EMI FILTER		
K3002	NQR0504-001X	EMI FILTER		
K3003	NQR0504-001X	EMI FILTER		
K3004	NQR0504-001X	EMI FILTER		
K3005	NQR0504-001X	EMI FILTER		
K3006	NQR0504-001X	EMI FILTER		
K3012	NQR0499-001X	FERRITE BEADS		
K3013	NQR0499-001X	FERRITE BEADS		
K3014	NQR0499-001X	FERRITE BEADS		
K3015	NQR0499-001X	FERRITE BEADS		
K3016	NQR0499-001X	FERRITE BEADS		
K3021	NQR0504-001X	EMI FILTER		
K3022	NQR0504-001X	EMI FILTER		
K3023	NQR0504-001X	EMI FILTER		
K3024	NQR0504-001X	EMI FILTER		
K3025	NQR0504-001X	EMI FILTER		
K3026	NQR0504-001X	EMI FILTER		
K3105	NQR0499-001X	FERRITE BEADS		
K3107	NQR0499-001X	FERRITE BEADS		
K3291	NQR0499-001X	FERRITE BEADS		
K3292	NQR0499-001X	FERRITE BEADS		
K3305	NQR0499-001X	FERRITE BEADS		
K3306	NQR0499-001X	FERRITE BEADS		
K3307	NQR0499-001X	FERRITE BEADS		
K3491	NQR0499-001X	FERRITE BEADS		
K3492	NQR0499-001X	FERRITE BEADS		
K3505	NQR0499-001X	FERRITE BEADS		
K3507	NQR0499-001X	FERRITE BEADS		
K3691	NQR0499-001X	FERRITE BEADS		
K3692	NQR0499-001X	FERRITE BEADS		
K3701	NQR0499-001X	FERRITE BEADS		
K3702	NQR0499-001X	FERRITE BEADS		
K3703	NQR0499-001X	FERRITE BEADS		
K3704	NQR0499-001X	FERRITE BEADS		
K3705	NQR0499-001X	FERRITE BEADS		
K3706	NQR0499-001X	FERRITE BEADS		
K3708	NQR0499-001X	FERRITE BEADS		
K3711	NQR0499-001X	FERRITE BEADS		
K3712	NQR0499-001X	FERRITE BEADS		
K3713	NQR0499-001X	FERRITE BEADS		
K3717	NQR0499-001X	FERRITE BEADS		
K3901	NQR0499-001X	FERRITE BEADS		
K3902	NQR0499-001X	FERRITE BEADS		
K3903	NQR0499-001X	FERRITE BEADS		
K3904	NQR0499-001X	FERRITE BEADS		
K3905	NQR0499-001X	FERRITE BEADS		
K3906	NQR0499-001X	FERRITE BEADS		
K3907	NQR0499-001X	FERRITE BEADS		
K3908	NQR0499-001X	FERRITE BEADS		
K3909	NQR0499-001X	FERRITE BEADS		
K3910	NQR0499-001X	FERRITE BEADS		
K3911	NQR0499-001X	FERRITE BEADS		
K3912	NQR0499-001X	FERRITE BEADS		
K3913	NQR0499-001X	FERRITE BEADS		
K3914	NQR0499-001X	FERRITE BEADS		
K3915	NQR0499-001X	FERRITE BEADS		
K3916	NQR0499-001X	FERRITE BEADS		
K3917	NQR0499-001X	FERRITE BEADS		
K3918	NQR0499-001X	FERRITE BEADS		
K3919	NQR0499-001X	FERRITE BEADS		
K3920	NQR0499-001X	FERRITE BEADS		
K3921	NQR0499-001X	FERRITE BEADS		
K3922	NQR0499-001X	FERRITE BEADS		
K3950	NQR0499-001X	FERRITE BEADS		
K3951	NQR0499-001X	FERRITE BEADS		
K3952	NQR0499-001X	FERRITE BEADS		
X3001	NAX0587-001X	CXO	54.0000MHz	
X3301	NAX0673-001X	CRYSTAL	14.31818MHz	
X3701	NAX0713-001X	CRYSTAL	24.000MHz	

REMOCON P.W. BOARD ASS'Y (SRA-8011A-M2)

⚠Ref No.	Part No.	Part Name	Description	Local
IC0821	KSM-2013SY22EL	IR DETECT UNIT		
D0821	UDZW6.8B-X	Z DIODE		
C0821	NCB31CK-104X	C CAPACITOR	0.1uF 16V K	
C0822	QETN1EM-476Z	E CAPACITOR	47uF 25V M	
R0821	NRSA63J-102X	MG RESISTOR	1kΩ 1/16W J	
R0822	NRSA63J-101X	MG RESISTOR	100Ω 1/16W J	
R0823	NRSA63J-101X	MG RESISTOR	100Ω 1/16W J	

TEMP P.W. BOARD ASS'Y (SRA-8203A-M2)

⚠Ref No.	Part No.	Part Name	Description	Local
IC2001	LM75BIM-5-X	IC		
D2001	STZ6.8N-X	Z DIODE		
C2002	NCB21CK-105X	C CAPACITOR	1uF 16V K	
R2001	NRSA63J-103X	MG RESISTOR	10kΩ 1/16W J	
R2002	NRSA63J-101X	MG RESISTOR	100Ω 1/16W J	
R2003	NRSA63J-101X	MG RESISTOR	100Ω 1/16W J	
K2001	NRSA02J-0R0X	MG RESISTOR	0Ω 1/10W J	

IRIS P.W. BOARD ASS'Y (SRA-8303A-M2)

⚠Ref No.	Part No.	Part Name	Description	Local
IC5001	NJM4556AM-XE	IC		
IC5002	NJM2904M-W	IC		
IC5003	BA80BC0WFP-X	IC		
IC5005	PCF8591T/2-X	IC(DIGITAL)		
IC5007	NJM2904M-W	IC		
Q5001	2SC3928A/QR/-X	TRANSISTOR		
D5001	STZ6.8N-X	Z DIODE		
C5001	NCB31HK-103X	C CAPACITOR	0.01uF 50V K	
C5002	NCB31HK-103X	C CAPACITOR	0.01uF 50V K	
C5003	NCB31HK-103X	C CAPACITOR	0.01uF 50V K	
C5005	NEZ0032-106X	E CAPACITOR	10uF	
C5006	NCB31CK-104X	C CAPACITOR	0.1uF 16V K	
C5007	NDC31HJ-101X	C CAPACITOR	100pF 50V J	
C5008	NEZ0032-476X	E CAPACITOR	47uF	
C5009	NCB31CK-104X	C CAPACITOR	0.1uF 16V K	
C5010	NCB31CK-104X	C CAPACITOR	0.1uF 16V K	
C5014	NCF31CZ-104X	C CAPACITOR	0.1uF 16V Z	
C5015	NCF31CZ-104X	C CAPACITOR	0.1uF 16V Z	
C5016	NEZ0032-106X	E CAPACITOR	10uF	
C5017	NCF31CZ-104X	C CAPACITOR	0.1uF 16V Z	
C5019	NCB31HK-103X	C CAPACITOR	0.01uF 50V K	

⚠Ref No.	Part No.	Part Name	Description	Local
R5001	NRSA63J-474X	MG RESISTOR	470kΩ 1/16W J	
R5002	NRSA63J-474X	MG RESISTOR	470kΩ 1/16W J	
R5003	NRSA63J-471X	MG RESISTOR	470Ω 1/16W J	
R5004	NRSA63J-151X	MG RESISTOR	150Ω 1/16W J	
R5005	NRSA63J-151X	MG RESISTOR	150Ω 1/16W J	
R5006	NRSA63J-152X	MG RESISTOR	1.5kΩ 1/16W J	
R5007	NRSA63J-0R0X	MG RESISTOR	0Ω 1/16W J	
R5008	NRSA63J-102X	MG RESISTOR	1kΩ 1/16W J	
R5009	NRSA63J-152X	MG RESISTOR	1.5kΩ 1/16W J	
R5010	NRSA63J-152X	MG RESISTOR	1.5kΩ 1/16W J	
R5011	NRSA63J-104X	MG RESISTOR	100kΩ 1/16W J	
R5012	NRSA63J-302X	MG RESISTOR	3kΩ 1/16W J	
R5013	NRSA63J-302X	MG RESISTOR	3kΩ 1/16W J	
R5014	NRSA63J-103X	MG RESISTOR	10kΩ 1/16W J	
R5015	NRSA63J-0R0X	MG RESISTOR	0Ω 1/16W J	
R5016	NRSA63J-222X	MG RESISTOR	2.2kΩ 1/16W J	
R5024	NRSA63J-181X	MG RESISTOR	180Ω 1/16W J	
R5025	NRSA63J-181X	MG RESISTOR	180Ω 1/16W J	
R5027	NRSA63J-0R0X	MG RESISTOR	0Ω 1/16W J	
R5031	NRSA63J-0R0X	MG RESISTOR	0Ω 1/16W J	
R5034	NRSA63J-0R0X	MG RESISTOR	0Ω 1/16W J	
R5035	NRSA63J-0R0X	MG RESISTOR	0Ω 1/16W J	
R5036	NRSA63J-0R0X	MG RESISTOR	0Ω 1/16W J	
R5038	NRSA63J-0R0X	MG RESISTOR	0Ω 1/16W J	
R5039	NRSA63J-0R0X	MG RESISTOR	0Ω 1/16W J	
R5043	NRSA63J-0R0X	MG RESISTOR	0Ω 1/16W J	
R5045	NRSA63J-0R0X	MG RESISTOR	0Ω 1/16W J	
R5046	NRSA63J-101X	MG RESISTOR	100Ω 1/16W J	
R5047	NRSA63J-101X	MG RESISTOR	100Ω 1/16W J	
R5048	NRSA63J-0R0X	MG RESISTOR	0Ω 1/16W J	
R5060	NRSA63J-0R0X	MG RESISTOR	0Ω 1/16W J	
R5067	NRSA63J-301X	MG RESISTOR	300Ω 1/16W J	
R5068	NRSA63J-222X	MG RESISTOR	2.2kΩ 1/16W J	
R5070	NRSA63J-103X	MG RESISTOR	10kΩ 1/16W J	
R5071	NRSA63J-204X	MG RESISTOR	200kΩ 1/16W J	
R5072	NRSA63J-272X	MG RESISTOR	2.7kΩ 1/16W J	
R5073	NRSA63J-302X	MG RESISTOR	3kΩ 1/16W J	
R5074	NRSA63J-182X	MG RESISTOR	1.8kΩ 1/16W J	
R5076	NRSA63J-0R0X	MG RESISTOR	0Ω 1/16W J	
R5078	NRSA63J-0R0X	MG RESISTOR	0Ω 1/16W J	
R5080	NRSA63J-103X	MG RESISTOR	10kΩ 1/16W J	
R5082	NRSA63J-0R0X	MG RESISTOR	0Ω 1/16W J	
R5083	NRSA63J-0R0X	MG RESISTOR	0Ω 1/16W J	
R5085	NRSA63J-101X	MG RESISTOR	100Ω 1/16W J	
R5087	NRSA63J-0R0X	MG RESISTOR	0Ω 1/16W J	
R5089	NRSA63J-204X	MG RESISTOR	200kΩ 1/16W J	
R5090	NRSA63J-473X	MG RESISTOR	47kΩ 1/16W J	
R5091	NRSA63J-474X	MG RESISTOR	470kΩ 1/16W J	
R5092	NRSA63J-154X	MG RESISTOR	150kΩ 1/16W J	
R5093	NRSA63J-104X	MG RESISTOR	100kΩ 1/16W J	
R5094	NRSA63J-302X	MG RESISTOR	3kΩ 1/16W J	
R5095	NRSA63J-302X	MG RESISTOR	3kΩ 1/16W J	
R5097	NRSA63J-563X	MG RESISTOR	56kΩ 1/16W J	
R5099	NRSA63J-0R0X	MG RESISTOR	0Ω 1/16W J	

SD CARD P.W. BOARD ASS'Y (SRA-8505A-M2)

⚠Ref No.	Part No.	Part Name	Description	Local
IC1001	AU9331C23-MAS-X	IC		
Q1001	2SA1576A/QRS/-X	TRANSISTOR		
C1001	NEHL1CM-106X	E CAPACITOR	10uF 16V M	
C1002	NDC31HJ-270X	C CAPACITOR	27pF 50V J	
C1003	NDC31HJ-270X	C CAPACITOR	27pF 50V J	
C1004	NDC31HJ-150X	C CAPACITOR	15pF 50V J	
C1005	NDC31HJ-150X	C CAPACITOR	15pF 50V J	
C1006	NDC31HJ-120X	C CAPACITOR	12pF 50V J	
C1007	NDC31HJ-120X	C CAPACITOR	12pF 50V J	
C1008	NCB31CK-104X	C CAPACITOR	0.1uF 16V K	
C1009	NCB31CK-104X	C CAPACITOR	0.1uF 16V K	
C1010	NCB31CK-104X	C CAPACITOR	0.1uF 16V K	
C1011	NEHL1CM-106X	E CAPACITOR	10uF 16V M	
C1012	NCB31HK-103X	C CAPACITOR	0.01uF 50V K	
C1013	NCB31CK-104X	C CAPACITOR	0.1uF 16V K	
C1014	NCB31CK-104X	C CAPACITOR	0.1uF 16V K	
C1015	NEHL0GM-227X	E CAPACITOR	220uF 4V M	
C1016	NCB31CK-104X	C CAPACITOR	0.1uF 16V K	
R1001	NRSA63J-152X	MG RESISTOR	1.5kΩ 1/16W J	
R1003	NRSA63J-330X	MG RESISTOR	33Ω 1/16W J	
R1004	NRSA63J-330X	MG RESISTOR	33Ω 1/16W J	
R1005	NRSA63J-0R0X	MG RESISTOR	0Ω 1/16W J	
R1006	NRSA63J-105X	MG RESISTOR	1MΩ 1/16W J	
R1007	NRSA63J-471X	MG RESISTOR	470Ω 1/16W J	
R1008	NRSA63J-473X	MG RESISTOR	47kΩ 1/16W J	
R1009	NRSA63J-222X	MG RESISTOR	2.2kΩ 1/16W J	
R1010	NRSA63J-102X	MG RESISTOR	1kΩ 1/16W J	
R1014	NRSA63J-473X	MG RESISTOR	47kΩ 1/16W J	
R1015	NRSA63J-103X	MG RESISTOR	10kΩ 1/16W J	
RA1001	NRZ0040-103X	NET RESISTOR	10kΩ 1/16W J x4	
RA1002	NRZ0040-473X	NET RESISTOR	47kΩ 1/16W J x4	
L1001	NQR0603-002X	EMI FILTER		
JK1001	NNZ0058-001X	SD CARD CONNE		
K1001	NQR0499-002X	FERRITE BEADS		
K1002	NQR0499-002X	FERRITE BEADS		
LC1001	NQR0483-007X	EMI FILTER		
X1001	NAX0812-001X	CRYSTAL	12.000MHz	

POWER P.W. BOARD ASS'Y (SRA-9014A-M2)

⚠Ref No.	Part No.	Part Name	Description	Local
IC9101	BA50BC0FP-X	IC		
IC9301	BAJ5CC0FP-X	IC		
IC9501	STR-W6754-F5	SW IC		
IC9701	PQ120RDA1SZ	IC		
IC9721	PQ15RW11	IC		
IC9741	PQ1CG2032FZ	IC		
Q9021	2SC3928A/QR/-X	TRANSISTOR		
Q9281	2SC3928A/QR/-X	TRANSISTOR		
Q9282	2SC3928A/QR/-X	TRANSISTOR		
Q9283	2SC3928A/QR/-X	TRANSISTOR		
Q9284	2SC3928A/QR/-X	TRANSISTOR		
Q9821	2SC3928A/QR/-X	TRANSISTOR		
Q9831	2SC3928A/QR/-X	TRANSISTOR		
Q9851	2SA1530A/QR/-X	TRANSISTOR		
Q9852	UN2213-X	DIGI TRANSISTOR		
Q9853	UN2213-X	DIGI TRANSISTOR		
Q9861	2SC3928A/QR/-X	TRANSISTOR		
D9021	1SS355-X	SI DIODE		
D9101	1N4003SG-T2	SI DIODE		
D9102	1N4003SG-T2	SI DIODE		
D9103	1N4003SG-T2	SI DIODE		
D9104	1N4003SG-T2	SI DIODE		
D9106	1N4003SG-T2	SI DIODE		
⚠D9201	GBJ6JU	BRIDGE DIODE		
D9281	MA111-X	SI DIODE		
D9282	UDZS4.7B-X	Z DIODE		
D9283	UDZS2.4B-X	Z DIODE		
D9301	SK14-GA-X	SB DIODE		
D9501	SARS01-T2	FR DIODE		
D9502	SARS01-T2	FR DIODE		
D9503	FR105SGT-T2	SI DIODE		
D9504	FR105SGT-T2	SI DIODE		
D9505	MTZJ33B-T2	Z DIODE		
D9506	FR105SGT-T2	SI DIODE		
D9507	1SS355-X	SI DIODE		
D9510	1SS355-X	SI DIODE		
D9512	FR105SGT-T2	SI DIODE		
D9514	MTZJ13B-T2	Z DIODE		
D9551	HER202G-FL	SI DIODE		
D9552	HER202G-FL	SI DIODE		
D9553	FCH20A10	SB DIODE		
D9554	FR105SGT-T2	SI DIODE		
D9555	MTZJ15B-T2	Z DIODE		
D9556	MTZJ16C-T2	Z DIODE		
D9557	FR105SGT-T2	SI DIODE		
D9601	UTCTL431-T	IC		
D9701	SK14-GA-X	SB DIODE		
D9702	1SS355-X	SI DIODE		
D9721	SK14-GA-X	SB DIODE		
D9741	FSQ05A04	SB DIODE		
D9743	MTZJ6.8B-T2	Z DIODE		
D9821	1SS355-X	SI DIODE		
D9831	1SS355-X	SI DIODE		
D9832	UDZS3.3B-X	Z DIODE		
D9851	UDZS5.1B-X	Z DIODE		
D9852	1SS355-X	SI DIODE		
D9861	1SS355-X	SI DIODE		
D9862	1SS355-X	SI DIODE		
⚠C9001	QFZ9072-105	MM CAPACITOR	1uF AC250V K	
⚠C9002	QFZ9072-224	MM CAPACITOR	0.22uF AC250V K	
⚠C9011	QCZ9079-102	C CAPACITOR	1000pF AC250V M	
⚠C9013	QCZ9079-102	C CAPACITOR	1000pF AC250V M	
C9101	QEHR1CM-108Z	E CAPACITOR	1000uF 16V M	
C9103	QEHR1CM-108Z	E CAPACITOR	1000uF 16V M	

⚠Ref No.	Part No.	Part Name	Description	Local
C9104	QEHR1CM-107Z	E CAPACITOR	100uF 16V M	
⚠C9192	QCZ9079-102	C CAPACITOR	1000pF AC250V M	
⚠C9193	QCZ9079-222	C CAPACITOR	2200pF AC250V M	
⚠C9201	QCZ9078-222	C CAPACITOR	2200pF AC250V M	
⚠C9202	QCZ9078-222	C CAPACITOR	2200pF AC250V M	
⚠C9203	QCZ9078-222	C CAPACITOR	2200pF AC250V M	
⚠C9204	QCZ9078-222	C CAPACITOR	2200pF AC250V M	
C9205	QEZ0802-108	E CAPACITOR	1000uF	
C9206	QEZ0802-108	E CAPACITOR	1000uF	
C9219	QCZ0122-471	C CAPACITOR	470pF 2kV K	
C9281	QEHR1HM-226Z	E CAPACITOR	22uF 50V M	
C9282	NCB31HK-102X	C CAPACITOR	1000pF 50V K	
C9301	QEHR1EM-107Z	E CAPACITOR	100uF 25V M	
C9302	NCB31HK-104X	C CAPACITOR	0.1uF 50V K	
C9303	NCF11EZ-105X	C CAPACITOR	1uF 25V Z	
C9501	QFP32JK-332	PP CAPACITOR	3300pF 630V K	
C9503	NCB31HK-332X	C CAPACITOR	3300pF 50V K	
C9504	QEHR1VM-476Z	E CAPACITOR	47uF 35V M	
C9505	NCB31HK-152X	C CAPACITOR	1500pF 50V K	
C9506	QEHR1HM-105Z	E CAPACITOR	1uF 50V M	
C9507	NCB31EK-104X	C CAPACITOR	0.1uF 25V K	
C9508	QCZ0340-471	C CAPACITOR	470pF 2kV K	
C9511	QEHR1HM-107Z	E CAPACITOR	100uF 50V M	
C9512	NCB31HK-102X	C CAPACITOR	1000pF 50V K	
C9555	QECQ1EM-188	E CAPACITOR	1800uF 25V M	
C9556	QECQ1EM-188	E CAPACITOR	1800uF 25V M	
C9557	QECQ1EM-188	E CAPACITOR	1800uF 25V M	
C9559	QEHR2AM-106Z	E CAPACITOR	10uF 100V M	
C9560	QEHR1HM-105Z	E CAPACITOR	1uF 50V M	
C9562	QEHR1EM-477Z	E CAPACITOR	470uF 25V M	
C9563	QEHQ1VM-108	E CAPACITOR	1000uF 35V M	
C9564	QEHQ1VM-108	E CAPACITOR	1000uF 35V M	
C9568	NCB31HK-102X	C CAPACITOR	1000pF 50V K	
C9569	NCB31HK-102X	C CAPACITOR	1000pF 50V K	
C9570	NCB31HK-102X	C CAPACITOR	1000pF 50V K	
C9571	NCB31HK-102X	C CAPACITOR	1000pF 50V K	
C9572	NCB31HK-102X	C CAPACITOR	1000pF 50V K	
C9573	NCB31HK-102X	C CAPACITOR	1000pF 50V K	
C9603	NCB31EK-104X	C CAPACITOR	0.1uF 25V K	
C9701	QEHR1HM-106Z	E CAPACITOR	10uF 50V M	
C9702	QEHR1CM-107Z	E CAPACITOR	100uF 16V M	
C9721	QEHR1EM-107Z	E CAPACITOR	100uF 25V M	
C9723	QEHR1CM-107Z	E CAPACITOR	100uF 16V M	
C9741	QEHR1EM-108Z	E CAPACITOR	1000uF 25V M	
C9742	NCB31EK-104X	C CAPACITOR	0.1uF 25V K	
C9743	QECR1AM-128Z	E CAPACITOR	1200uF 10V M	
C9831	NCB31CK-105X	C CAPACITOR	1uF 16V K	
C9851	QEHR1CM-107Z	E CAPACITOR	100uF 16V M	
C9852	NCB31EK-104X	C CAPACITOR	0.1uF 25V K	
C9876	NCB31HK-102X	C CAPACITOR	1000pF 50V K	
C9877	NCB31HK-102X	C CAPACITOR	1000pF 50V K	
C9878	NCB31HK-102X	C CAPACITOR	1000pF 50V K	
C9879	NCB31HK-102X	C CAPACITOR	1000pF 50V K	
C9880	NCB31HK-102X	C CAPACITOR	1000pF 50V K	
C9881	NCB31HK-102X	C CAPACITOR	1000pF 50V K	
C9882	NCB31HK-102X	C CAPACITOR	1000pF 50V K	
C9883	NCB31HK-102X	C CAPACITOR	1000pF 50V K	
C9884	NCB31HK-102X	C CAPACITOR	1000pF 50V K	
C9885	NDC31HJ-470X	C CAPACITOR	47pF 50V J	
C9895	NCB31HK-102X	C CAPACITOR	1000pF 50V K	
C9897	QEHR1CM-107Z	E CAPACITOR	100uF 16V M	
⚠R9001	QRZ9046-105Z	C RESISTOR	1MΩ 1/2W K	
R9021	NRSA63J-472X	MG RESISTOR	4.7kΩ 1/16W J	
R9022	NRSA63J-473X	MG RESISTOR	47kΩ 1/16W J	
R9112	QRE121J-330Y	C RESISTOR	33Ω 1/2W J	
R9113	QRE121J-330Y	C RESISTOR	33Ω 1/2W J	
⚠R9191	QRZ9046-685Z	C RESISTOR	6.8MΩ 1/2W K	
⚠R9201	QRF154K-2R2	UNF WW RESISTOR	2.2Ω 15W K	
⚠R9202	QRF154K-2R2	UNF WW RESISTOR	2.2Ω 15W K	
R9204	QRE121J-124Y	C RESISTOR	120kΩ 1/2W J	
R9205	QRE121J-124Y	C RESISTOR	120kΩ 1/2W J	
R9282	NRSA63J-103X	MG RESISTOR	10kΩ 1/16W J	
R9283	NRSA63J-472X	MG RESISTOR	4.7kΩ 1/16W J	
R9284	NRSA63J-473X	MG RESISTOR	47kΩ 1/16W J	
R9285	NRSA63J-682X	MG RESISTOR	6.8kΩ 1/16W J	
R9286	NRSA63J-470X	MG RESISTOR	47Ω 1/16W J	
R9287	NRSA63J-392X	MG RESISTOR	3.9kΩ 1/16W J	
R9288	NRSA63J-183X	MG RESISTOR	18kΩ 1/16W J	
R9289	NRSA63J-473X	MG RESISTOR	47kΩ 1/16W J	
R9290	NRSA63J-0R0X	MG RESISTOR	0Ω 1/16W J	
R9291	NRSA63J-472X	MG RESISTOR	4.7kΩ 1/16W J	
R9292	NRSA63J-0R0X	MG RESISTOR	0Ω 1/16W J	
R9293	NDC31HJ-101X	C CAPACITOR	100pF 50V J	
R9301	NRS12BJ-122W	MG RESISTOR	1.2kΩ 1/2W J	
R9501	QRL039J-104	OMF RESISTOR	100kΩ 3W J	
R9502	QRL039J-333	OMF RESISTOR	33kΩ 3W J	
R9503	QRE121J-394Y	C RESISTOR	390kΩ 1/2W J	
R9504	QRE121J-394Y	C RESISTOR	390kΩ 1/2W J	
R9505	QRL039J-220	OMF RESISTOR	22Ω 3W J	

⚠Ref No.	Part No.	Part Name	Description	Local
⚠R9506	QRZ9017-470	FUSI RESISTOR	47Ω 1/4W J	
R9507	NRS12BJ-100W	MG RESISTOR	10Ω 1/2W J	
R9508	NRS12BJ-122W	MG RESISTOR	1.2kΩ 1/2W J	
R9510	NRSA63J-102X	MG RESISTOR	1kΩ 1/16W J	
R9511	QRK126J-101X	UNF C RESISTOR	100Ω 1/2W J	
R9512	QRX01GJ-R33	MF RESISTOR	0.33Ω 1W J	
R9513	QRX01GJ-5R6	MF RESISTOR	5.6Ω 1W J	
R9514	NRSA63J-332X	MG RESISTOR	3.3kΩ 1/16W J	
⚠R9515	QRZ9009-4R7	FUSI RESISTOR	4.7Ω 1/2W J	
R9516	NRSA63J-104X	MG RESISTOR	100kΩ 1/16W J	
R9556	QRG01GJ-152	OMF RESISTOR	1.5kΩ 1W J	
R9557	NRSA63J-334X	MG RESISTOR	330kΩ 1/16W J	
R9562	QRL029J-220	OMF RESISTOR	22Ω 2W J	
R9563	QRT039J-R47	MF RESISTOR	0.47Ω 3W J	
R9566	QRT039J-R47	MF RESISTOR	0.47Ω 3W J	
R9567	NRSA63J-0R0X	MG RESISTOR	0Ω 1/16W J	
R9601	NRSA63J-102X	MG RESISTOR	1kΩ 1/16W J	
R9602	NRSA63J-102X	MG RESISTOR	1kΩ 1/16W J	
R9605	NRSA63J-123X	MG RESISTOR	12kΩ 1/16W J	
R9606	NRSA63D-103X	MG RESISTOR	10kΩ 1/16W D	
R9607	NRSA63D-272X	MG RESISTOR	2.7kΩ 1/16W D	
R9608	NRSA63D-183X	MG RESISTOR	18kΩ 1/16W D	
R9701	NRSA63J-473X	MG RESISTOR	47kΩ 1/16W J	
R9721	NRSA63J-104X	MG RESISTOR	100kΩ 1/16W J	
R9722	NRSA63D-222X	MG RESISTOR	2.2kΩ 1/16W D	
R9723	NRSA63D-562X	MG RESISTOR	5.6kΩ 1/16W D	
R9741	NRSA63D-333X	MG RESISTOR	33kΩ 1/16W D	
R9742	NRSA63D-302X	MG RESISTOR	3kΩ 1/16W D	
R9743	NRSA63D-103X	MG RESISTOR	10kΩ 1/16W D	
R9744	NRSA63D-153X	MG RESISTOR	15kΩ 1/16W D	
R9821	NRSA63J-822X	MG RESISTOR	8.2kΩ 1/16W J	
R9822	NRSA63J-122X	MG RESISTOR	1.2kΩ 1/16W J	
R9823	NRSA63J-103X	MG RESISTOR	10kΩ 1/16W J	
R9831	NRSA63J-472X	MG RESISTOR	4.7kΩ 1/16W J	
R9832	NRSA63J-122X	MG RESISTOR	1.2kΩ 1/16W J	
R9833	NRSA63J-103X	MG RESISTOR	10kΩ 1/16W J	
R9834	NRSA63J-332X	MG RESISTOR	3.3kΩ 1/16W J	
R9851	NRSA63J-103X	MG RESISTOR	10kΩ 1/16W J	
R9852	NRSA63J-472X	MG RESISTOR	4.7kΩ 1/16W J	
R9853	NRSA63J-104X	MG RESISTOR	100kΩ 1/16W J	
R9854	NRSA63J-101X	MG RESISTOR	100Ω 1/16W J	
R9855	NRSA63J-473X	MG RESISTOR	47kΩ 1/16W J	
R9861	NRSA63J-102X	MG RESISTOR	1kΩ 1/16W J	
R9862	NRSA63J-0R0X	MG RESISTOR	0Ω 1/16W J	
R9863	NRSA63J-123X	MG RESISTOR	12kΩ 1/16W J	
R9864	NRSA63J-122X	MG RESISTOR	1.2kΩ 1/16W J	
R9865	NRSA63J-472X	MG RESISTOR	4.7kΩ 1/16W J	
R9866	NRSA63J-103X	MG RESISTOR	10kΩ 1/16W J	
R9873	NRSA63J-0R0X	MG RESISTOR	0Ω 1/16W J	
R9877	NRSA63J-0R0X	MG RESISTOR	0Ω 1/16W J	
R9878	NRSA63J-0R0X	MG RESISTOR	0Ω 1/16W J	
R9898	NRSA63J-0R0X	MG RESISTOR	0Ω 1/16W J	
R9899	NRSA63J-0R0X	MG RESISTOR	0Ω 1/16W J	
L9551	QQL26AM-3R3Z	CHOKE COIL	3.3uH M	
L9552	QQL26AM-3R3Z	CHOKE COIL	3.3uH M	
L9553	QQL26AM-3R3Z	CHOKE COIL	3.3uH M	
L9741	QQR1401-001	CHOKE COIL		
L9876	QQL26AM-3R3Z	CHOKE COIL	3.3uH M	
⚠T9101	QQT0520-001	POWER TRANSF		
⚠T9501	QQS0365-001	SW TRANSF		
⚠CP9211	QMFZ043-5R0Z-J1	FUSE	5A AC250V	
⚠CP9554	ICP-N50-T	IC PROTECTOR	2.0A	
⚠CP9555	ICP-N50-T	IC PROTECTOR	2.0A	
⚠CP9556	ICP-N70-T	IC PROTECTOR	2.5A	
⚠CP9557	ICP-N70-T	IC PROTECTOR	2.5A	
⚠F9001	QMF5AD2-6R3-J1	FUSE	6.3A AC250V	
K9501	QQR1139-001	FERRITE BEADS		
K9502	QQR0621-002Z	FERRITE BEADS		
K9551	QQR0621-002Z	FERRITE BEADS		
K9552	QQR0621-002Z	FERRITE BEADS		
⚠LF9001	QQR1542-001	LINE FILTER		
⚠LF9002	QQR1466-001	LINE FILTER		
⚠LF9003	QQR1467-001	LINE FILTER		
⚠PC9501	PS2581AL1/QW/	PHOTO COUPLER		
⚠RY9021	QSK0162-001	RELAY		
⚠VA9001	QAF0060-621	VARISTOR	620V	

DIGITAL P.W. BOARD ASS'Y (SRA0D124A-M2)

⚠Ref No.	Part No.	Part Name	Description	Local
IC6001	JCC5068	IC		
IC6002	SN74LVC1G08V-X	IC		
IC6003	MK2302S-01LF-X	IC		
IC6004	ICS574MLF-X	IC		

⚠Ref No.	Part No.	Part Name	Description	Local
IC6011	SN74CBQ16211G-X	IC		
IC6012	SN74CBQ3306AU-X	IC		
IC6013	SN74CBQ3306AU-X	IC		
IC6101	EDD1232AAFA-6B	IC		
IC6102	LP2996MR-X	IC		
IC6250	UPC5702GS-027-X	IC		
IC6251	R1170H331B-X	IC		
IC6501	THC63LVD1023	IC		
IC6724	S-80928CLNB-G-W	IC		
IC6901	R1141Q331B-X	IC		
IC7033	CD74HC4094PW-X	IC		
IC7036	ADC081S021CIS-X	IC		
IC7201	39VF800A7IEKD56	IC(MICRO C ROM)		
IC7203	HY57V161610ETP7	IC		
IC7204	S-80928CLNB-G-W	IC		
IC7206	74LVC1G17GW-X	IC		
IC7601	M306V7MG-154FP	IC(MCU)		
IC7602	ATF16-56FH97	IC	(SERVICE)	
IC7603	SN74AHCT1G08V-X	IC		
IC7604	SN74LVC1G04V-X	IC		
IC7605	MM1673XN-X	IC		
IC7606	MM1673XN-X	IC		
IC7607	ICL3221CAZ-X	IC		
IC9001	MP2263DN-C053-X	IC		
IC9101	MM1662FT-X	IC		
IC9201	MP2263DN-C053-X	IC		
IC9301	MM1701CH-X	IC		
Q6201	2SA1530A/QR/-X	TRANSISTOR		
Q6202	2SA1530A/QR/-X	TRANSISTOR		
Q6203	2SA1022/BC/-X	TRANSISTOR		
Q6204	2SA1022/BC/-X	TRANSISTOR		
Q6205	2SA1022/BC/-X	TRANSISTOR		
Q6206	2SA1022/BC/-X	TRANSISTOR		
Q6207	2SC3837K/NP/-X	TRANSISTOR		
Q6208	2SC3837K/NP/-X	TRANSISTOR		
Q6209	2SC3837K/NP/-X	TRANSISTOR		
Q6210	2SC3837K/NP/-X	TRANSISTOR		
Q6211	2SC3837K/NP/-X	TRANSISTOR		
Q6212	2SC3837K/NP/-X	TRANSISTOR		
Q6213	2SC3837K/NP/-X	TRANSISTOR		
Q6214	2SC3837K/NP/-X	TRANSISTOR		
Q6250	2SC3928A/QR/-X	TRANSISTOR		
Q6251	2SC3928A/QR/-X	TRANSISTOR		
Q7030	RT1N441C-X	TRANSISTOR		
Q7032	RT1P441C-X	DIGI TRANSISTOR		
Q7033	RT1P441C-X	DIGI TRANSISTOR		
Q7501	RT1N441C-X	TRANSISTOR		
D6052	1SS355W-X	DIODE		
D7201	RB501V-40-X	SB DIODE		
D7502	1SS355W-X	DIODE		
D7604	MA8120-X	Z DIODE		
D7605	MA8120-X	Z DIODE		
D7606	MA8120-X	Z DIODE		
D7607	MA8120-X	Z DIODE		
D7608	RB521S-30-X	SB DIODE		
D9001	EC30HA03L-X	SB DIODE		
D9002	EC30HA03L-X	SB DIODE		
D9003	PTZ3.9B-X	Z DIODE		
D9201	EC30HA03L-X	SB DIODE		
D9202	EC30HA03L-X	SB DIODE		
D9203	PTZ3.9B-X	Z DIODE		
D9204	1SS355W-X	DIODE		
C6002	NCB31CK-104X	C CAPACITOR	0.1uF 16V K	
C6003	NCB31CK-104X	C CAPACITOR	0.1uF 16V K	
C6004	NCB31CK-104X	C CAPACITOR	0.1uF 16V K	
C6031	NCB31CK-104X	C CAPACITOR	0.1uF 16V K	
C6051	NCB21HK-104X	C CAPACITOR	0.1uF 50V K	
C6052	NCJ41CK-226X-U	C CAPACITOR	22mF 16V K	
C6053	NDC31HJ-100X	C CAPACITOR	10pF 50V J	
C6054	NCB31CK-104X	C CAPACITOR	0.1uF 16V K	
C6055	NCB31CK-104X	C CAPACITOR	0.1uF 16V K	
C6101	NCB30JK-225X	C CAPACITOR	2.2uF 6.3V K	
C6103	NCB31AK-474X	C CAPACITOR	0.47uF 10V K	
C6107	NCB31AK-474X	C CAPACITOR	0.47uF 10V K	
C6109	NCB31CK-104X	C CAPACITOR	0.1uF 16V K	
C6111	NCB31CK-104X	C CAPACITOR	0.1uF 16V K	
C6112	NCB31CK-104X	C CAPACITOR	0.1uF 16V K	
C6113	NCB31AK-474X	C CAPACITOR	0.47uF 10V K	
C6114	NCB31CK-104X	C CAPACITOR	0.1uF 16V K	
C6116	NCB31AK-474X	C CAPACITOR	0.47uF 10V K	
C6117	NCB30JK-225X	C CAPACITOR	2.2uF 6.3V K	
C6118	NCB31AK-474X	C CAPACITOR	0.47uF 10V K	
C6119	NCB31AK-474X	C CAPACITOR	0.47uF 10V K	
C6121	NCB31AK-474X	C CAPACITOR	0.47uF 10V K	
C6122	NEHL0JM-107X	E CAPACITOR	100uF 6.3V M	
C6123	NCB31CK-104X	C CAPACITOR	0.1uF 16V K	
C6124	NEHL0JM-107X	E CAPACITOR	100uF 6.3V M	

⚠Ref No.	Part No.	Part Name	Description	Local
C6125	NCB31CK-104X	C CAPACITOR	0.1uF 16V K	
C6126	NCB30JK-225X	C CAPACITOR	2.2uF 6.3V K	
C6128	NCB30JK-225X	C CAPACITOR	2.2uF 6.3V K	
C6130	NCB30JK-225X	C CAPACITOR	2.2uF 6.3V K	
C6132	NEHL1EM-226X	E CAPACITOR	22uF 25V M	
C6133	NCB31CK-154X	C CAPACITOR	0.15uF 16V K	
C6134	NCB11AK-106X	C CAPACITOR	10uF 10V K	
C6135	NCB31CK-104X	C CAPACITOR	0.1uF 16V K	
C6139	NCB31CK-104X	C CAPACITOR	0.1uF 16V K	
C6205	NCB31CK-104X	C CAPACITOR	0.1uF 16V K	
C6211	NCB31CK-104X	C CAPACITOR	0.1uF 16V K	
C6217	NCB31CK-104X	C CAPACITOR	0.1uF 16V K	
C6218	NCB31CK-104X	C CAPACITOR	0.1uF 16V K	
C6219	NCB31CK-104X	C CAPACITOR	0.1uF 16V K	
C6220	NCB31CK-104X	C CAPACITOR	0.1uF 16V K	
C6227	NCB31CK-104X	C CAPACITOR	0.1uF 16V K	
C6228	NCB31CK-104X	C CAPACITOR	0.1uF 16V K	
C6229	NCB31CK-104X	C CAPACITOR	0.1uF 16V K	
C6236	NCB31CK-104X	C CAPACITOR	0.1uF 16V K	
C6237	NCB31CK-104X	C CAPACITOR	0.1uF 16V K	
C6238	NCB31CK-104X	C CAPACITOR	0.1uF 16V K	
C6239	NCB31CK-104X	C CAPACITOR	0.1uF 16V K	
C6240	NCB31CK-104X	C CAPACITOR	0.1uF 16V K	
C6241	NCB11AK-106X	C CAPACITOR	10uF 10V K	
C6242	NCB31AK-105X	C CAPACITOR	1uF 10V K	
C6243	NCB11AK-106X	C CAPACITOR	10uF 10V K	
C6244	NCB31AK-105X	C CAPACITOR	1uF 10V K	
C6245	NCB11AK-106X	C CAPACITOR	10uF 10V K	
C6246	NCB31AK-105X	C CAPACITOR	1uF 10V K	
C6247	NCB11AK-106X	C CAPACITOR	10uF 10V K	
C6248	NCB31AK-105X	C CAPACITOR	1uF 10V K	
C6249	NCB31AK-105X	C CAPACITOR	1uF 10V K	
C6250	NCB11AK-106X	C CAPACITOR	10uF 10V K	
C6251	NCB31CK-104X	C CAPACITOR	0.1uF 16V K	
C6252	NCB11AK-106X	C CAPACITOR	10uF 10V K	
C6253	NCB11AK-106X	C CAPACITOR	10uF 10V K	
C6254	NCB11AK-106X	C CAPACITOR	10uF 10V K	
C6255	NCB11AK-106X	C CAPACITOR	10uF 10V K	
C6260	NCB21AK-225X	C CAPACITOR	2.2uF 10V K	
C6261	NCB21AK-225X	C CAPACITOR	2.2uF 10V K	
C6262	NCB21AK-225X	C CAPACITOR	2.2uF 10V K	
C6263	NCB21AK-225X	C CAPACITOR	2.2uF 10V K	
C6268	NCB31CK-104X	C CAPACITOR	0.1uF 16V K	
C6270	NCB31CK-104X	C CAPACITOR	0.1uF 16V K	
C6271	NCB31CK-104X	C CAPACITOR	0.1uF 16V K	
C6272	NCB31CK-104X	C CAPACITOR	0.1uF 16V K	
C6273	NCB31CK-104X	C CAPACITOR	0.1uF 16V K	
C6274	NCB31CK-104X	C CAPACITOR	0.1uF 16V K	
C6276	NCB31CK-104X	C CAPACITOR	0.1uF 16V K	
C6277	NCB31CK-104X	C CAPACITOR	0.1uF 16V K	
C6278	NCB31CK-104X	C CAPACITOR	0.1uF 16V K	
C6279	NCB31CK-104X	C CAPACITOR	0.1uF 16V K	
C6280	NCB31CK-104X	C CAPACITOR	0.1uF 16V K	
C6282	NCB31CK-104X	C CAPACITOR	0.1uF 16V K	
C6283	NCB31CK-104X	C CAPACITOR	0.1uF 16V K	
C6284	NCB31CK-104X	C CAPACITOR	0.1uF 16V K	
C6285	NCB31CK-104X	C CAPACITOR	0.1uF 16V K	
C6286	NCB31CK-104X	C CAPACITOR	0.1uF 16V K	
C6288	NCB31CK-104X	C CAPACITOR	0.1uF 16V K	
C6289	NCB31CK-104X	C CAPACITOR	0.1uF 16V K	
C6291	NCB31CK-104X	C CAPACITOR	0.1uF 16V K	
C6293	NCB31CK-104X	C CAPACITOR	0.1uF 16V K	
C6294	NBZ0007-107X	SP E CAPACITOR	100uF 4V M	
C6295	NBZ0007-107X	SP E CAPACITOR	100uF 4V M	
C6296	NCB11AK-106X	C CAPACITOR	10uF 10V K	
C6297	NCB11AK-106X	C CAPACITOR	10uF 10V K	
C6299	NCB31CK-104X	C CAPACITOR	0.1uF 16V K	
C6300	NCB31CK-104X	C CAPACITOR	0.1uF 16V K	
C6301	NCB31CK-104X	C CAPACITOR	0.1uF 16V K	
C6501	NCB31CK-104X	C CAPACITOR	0.1uF 16V K	
C6502	NCB31CK-104X	C CAPACITOR	0.1uF 16V K	
C6503	NCB31CK-104X	C CAPACITOR	0.1uF 16V K	
C6504	NCB31CK-104X	C CAPACITOR	0.1uF 16V K	
C6505	NCB31CK-104X	C CAPACITOR	0.1uF 16V K	
C6506	NCB31CK-104X	C CAPACITOR	0.1uF 16V K	
C6507	NCB31CK-104X	C CAPACITOR	0.1uF 16V K	
C6508	NCB31CK-104X	C CAPACITOR	0.1uF 16V K	
C6509	NCB31CK-104X	C CAPACITOR	0.1uF 16V K	
C6510	NCB31CK-104X	C CAPACITOR	0.1uF 16V K	
C6511	NCB31CK-104X	C CAPACITOR	0.1uF 16V K	
C6512	NCB31CK-104X	C CAPACITOR	0.1uF 16V K	
C6513	NCB31CK-104X	C CAPACITOR	0.1uF 16V K	
C6514	NCB31CK-104X	C CAPACITOR	0.1uF 16V K	
C6515	NCB31CK-104X	C CAPACITOR	0.1uF 16V K	
C6520	NCB11AK-106X	C CAPACITOR	10uF 10V K	
C6571	NDC31HJ-101X	C CAPACITOR	100pF 50V J	
C6572	NCB21CK-104X	C CAPACITOR	0.1uF 16V K	
C6601	NCB31CK-104X	C CAPACITOR	0.1uF 16V K	
C6602	NCB31CK-104X	C CAPACITOR	0.1uF 16V K	
C6603	NCB31CK-104X	C CAPACITOR	0.1uF 16V K	

⚠Ref No.	Part No.	Part Name	Description Local
C6610	NCB31CK-104X	C CAPACITOR	0.1uF 16V K
C6611	NCB31CK-104X	C CAPACITOR	0.1uF 16V K
C6612	NCB31CK-104X	C CAPACITOR	0.1uF 16V K
C6613	NCB31CK-104X	C CAPACITOR	0.1uF 16V K
C6614	NCB31CK-104X	C CAPACITOR	0.1uF 16V K
C6615	NCB31CK-104X	C CAPACITOR	0.1uF 16V K
C6616	NCB31CK-104X	C CAPACITOR	0.1uF 16V K
C6617	NCB31CK-104X	C CAPACITOR	0.1uF 16V K
C6618	NCB31CK-104X	C CAPACITOR	0.1uF 16V K
C6619	NCB31CK-104X	C CAPACITOR	0.1uF 16V K
C6620	NCB31CK-104X	C CAPACITOR	0.1uF 16V K
C6621	NCB31CK-104X	C CAPACITOR	0.1uF 16V K
C6622	NCB31CK-104X	C CAPACITOR	0.1uF 16V K
C6623	NCB31CK-104X	C CAPACITOR	0.1uF 16V K
C6624	NCB31CK-104X	C CAPACITOR	0.1uF 16V K
C6625	NCB31CK-104X	C CAPACITOR	0.1uF 16V K
C6626	NCB31CK-104X	C CAPACITOR	0.1uF 16V K
C6627	NCB31CK-104X	C CAPACITOR	0.1uF 16V K
C6628	NCB31CK-104X	C CAPACITOR	0.1uF 16V K
C6629	NCB31CK-104X	C CAPACITOR	0.1uF 16V K
C6630	NCB31CK-104X	C CAPACITOR	0.1uF 16V K
C6631	NCB31CK-104X	C CAPACITOR	0.1uF 16V K
C6632	NCB31CK-104X	C CAPACITOR	0.1uF 16V K
C6633	NCB31CK-104X	C CAPACITOR	0.1uF 16V K
C6634	NCB31CK-104X	C CAPACITOR	0.1uF 16V K
C6635	NCB31CK-104X	C CAPACITOR	0.1uF 16V K
C6636	NCB31CK-104X	C CAPACITOR	0.1uF 16V K
C6637	NCB31CK-104X	C CAPACITOR	0.1uF 16V K
C6638	NCB31CK-104X	C CAPACITOR	0.1uF 16V K
C6639	NCB31CK-104X	C CAPACITOR	0.1uF 16V K
C6640	NCB31CK-104X	C CAPACITOR	0.1uF 16V K
C6641	NCB31CK-104X	C CAPACITOR	0.1uF 16V K
C6642	NCB31CK-104X	C CAPACITOR	0.1uF 16V K
C6643	NCB31CK-104X	C CAPACITOR	0.1uF 16V K
C6644	NCB31CK-104X	C CAPACITOR	0.1uF 16V K
C6645	NCB31CK-104X	C CAPACITOR	0.1uF 16V K
C6654	NCB31CK-104X	C CAPACITOR	0.1uF 16V K
C6656	NCB31CK-104X	C CAPACITOR	0.1uF 16V K
C6657	NCB31CK-104X	C CAPACITOR	0.1uF 16V K
C6658	NCB31CK-104X	C CAPACITOR	0.1uF 16V K
C6659	NCB31CK-104X	C CAPACITOR	0.1uF 16V K
C6660	NCB31CK-104X	C CAPACITOR	0.1uF 16V K
C6661	NCB31CK-104X	C CAPACITOR	0.1uF 16V K
C6669	NCB31CK-104X	C CAPACITOR	0.1uF 16V K
C6670	NCB31CK-104X	C CAPACITOR	0.1uF 16V K
C6677	NCB31CK-104X	C CAPACITOR	0.1uF 16V K
C6678	NCB31CK-104X	C CAPACITOR	0.1uF 16V K
C6679	NCB31CK-104X	C CAPACITOR	0.1uF 16V K
C6680	NCB31CK-104X	C CAPACITOR	0.1uF 16V K
C6681	NCB31CK-104X	C CAPACITOR	0.1uF 16V K
C6682	NCB31CK-104X	C CAPACITOR	0.1uF 16V K
C6683	NCB31CK-104X	C CAPACITOR	0.1uF 16V K
C6684	NCB31CK-104X	C CAPACITOR	0.1uF 16V K
C6685	NCB31CK-104X	C CAPACITOR	0.1uF 16V K
C6686	NCB31CK-104X	C CAPACITOR	0.1uF 16V K
C6687	NCB31CK-104X	C CAPACITOR	0.1uF 16V K
C6688	NCB31CK-104X	C CAPACITOR	0.1uF 16V K
C6689	NCB31CK-104X	C CAPACITOR	0.1uF 16V K
C6690	NCB31CK-104X	C CAPACITOR	0.1uF 16V K
C6691	NCB31CK-104X	C CAPACITOR	0.1uF 16V K
C6692	NCB31CK-104X	C CAPACITOR	0.1uF 16V K
C6693	NCB31CK-104X	C CAPACITOR	0.1uF 16V K
C6694	NCB31CK-104X	C CAPACITOR	0.1uF 16V K
C6695	NCB31CK-104X	C CAPACITOR	0.1uF 16V K
C6696	NCB31CK-104X	C CAPACITOR	0.1uF 16V K
C6697	NCB31CK-104X	C CAPACITOR	0.1uF 16V K
C6698	NCB31CK-104X	C CAPACITOR	0.1uF 16V K
C6699	NCB31CK-104X	C CAPACITOR	0.1uF 16V K
C6701	NCF11CZ-475X	C CAPACITOR	4.7uF 16V Z
C6723	NCB31HK-222X	C CAPACITOR	2200pF 50V K
C6724	NCB31CK-103X	C CAPACITOR	0.01uF 16V K
C6901	NBZ0007-107X	SP E CAPACITOR	100uF 4V M
C6902	NCB31CK-104X	C CAPACITOR	0.1uF 16V K
C6903	NCB31CK-104X	C CAPACITOR	0.1uF 16V K
C6904	NCB31CK-104X	C CAPACITOR	0.1uF 16V K
C6905	NCB31CK-104X	C CAPACITOR	0.1uF 16V K
C6906	NCB31CK-104X	C CAPACITOR	0.1uF 16V K
C6907	NCB31CK-104X	C CAPACITOR	0.1uF 16V K
C6908	NCB31CK-104X	C CAPACITOR	0.1uF 16V K
C6909	NCB31CK-104X	C CAPACITOR	0.1uF 16V K
C6910	NCB31CK-104X	C CAPACITOR	0.1uF 16V K
C6911	NCB31CK-104X	C CAPACITOR	0.1uF 16V K
C6912	NCB11AK-106X	C CAPACITOR	10uF 10V K
C6913	NCB31CK-104X	C CAPACITOR	0.1uF 16V K
C6914	NCB31CK-104X	C CAPACITOR	0.1uF 16V K
C6915	NCB31CK-104X	C CAPACITOR	0.1uF 16V K
C6916	NCB31CK-104X	C CAPACITOR	0.1uF 16V K
C6917	NCB31CK-104X	C CAPACITOR	0.1uF 16V K
C6918	NCB31CK-104X	C CAPACITOR	0.1uF 16V K
C6919	NCB31CK-104X	C CAPACITOR	0.1uF 16V K

⚠Ref No.	Part No.	Part Name	Description Local
C6921	NCB11AK-106X	C CAPACITOR	10uF 10V K
C6922	NCB31CK-104X	C CAPACITOR	0.1uF 16V K
C6923	NCB11AK-106X	C CAPACITOR	10uF 10V K
C6924	NCB31CK-104X	C CAPACITOR	0.1uF 16V K
C6925	NCB11AK-106X	C CAPACITOR	10uF 10V K
C6926	NCB31CK-104X	C CAPACITOR	0.1uF 16V K
C6927	NCB11AK-106X	C CAPACITOR	10uF 10V K
C6928	NCB31CK-104X	C CAPACITOR	0.1uF 16V K
C6929	NCB31AK-105X	C CAPACITOR	1uF 10V K
C7039	NCB31HK-102X	C CAPACITOR	1000pF 50V K
C7040	NCB11AK-106X	C CAPACITOR	10uF 10V K
C7044	NCB31CK-104X	C CAPACITOR	0.1uF 16V K
C7051	NCB31CK-104X	C CAPACITOR	0.1uF 16V K
C7052	NCB31CK-104X	C CAPACITOR	0.1uF 16V K
C7053	NCB31CK-104X	C CAPACITOR	0.1uF 16V K
C7054	NCB31CK-104X	C CAPACITOR	0.1uF 16V K
C7055	NCB31CK-104X	C CAPACITOR	0.1uF 16V K
C7056	NCB31CK-104X	C CAPACITOR	0.1uF 16V K
C7057	NCB31CK-104X	C CAPACITOR	0.1uF 16V K
C7058	NCB31CK-104X	C CAPACITOR	0.1uF 16V K
C7059	NCB31CK-104X	C CAPACITOR	0.1uF 16V K
C7060	NCB31CK-104X	C CAPACITOR	0.1uF 16V K
C7061	NCB31CK-104X	C CAPACITOR	0.1uF 16V K
C7062	NCB31CK-104X	C CAPACITOR	0.1uF 16V K
C7063	NCB31CK-104X	C CAPACITOR	0.1uF 16V K
C7064	NCB31CK-104X	C CAPACITOR	0.1uF 16V K
C7065	NCB31CK-104X	C CAPACITOR	0.1uF 16V K
C7066	NCB31CK-104X	C CAPACITOR	0.1uF 16V K
C7067	NCB31CK-104X	C CAPACITOR	0.1uF 16V K
C7068	NCB31CK-104X	C CAPACITOR	0.1uF 16V K
C7073	NCB31CK-104X	C CAPACITOR	0.1uF 16V K
C7202	NCB31CK-104X	C CAPACITOR	0.1uF 16V K
C7203	NCB31CK-104X	C CAPACITOR	0.1uF 16V K
C7204	NCB31CK-104X	C CAPACITOR	0.1uF 16V K
C7205	NCB31CK-104X	C CAPACITOR	0.1uF 16V K
C7206	NCB31CK-104X	C CAPACITOR	0.1uF 16V K
C7207	NCB31CK-104X	C CAPACITOR	0.1uF 16V K
C7208	NCB31CK-104X	C CAPACITOR	0.1uF 16V K
C7209	NCB31CK-104X	C CAPACITOR	0.1uF 16V K
C7211	NCB31HK-102X	C CAPACITOR	1000pF 50V K
C7215	NDC31HJ-330X	C CAPACITOR	33pF 50V J
C7216	NCB31CK-104X	C CAPACITOR	0.1uF 16V K
C7501	NCB31CK-104X	C CAPACITOR	0.1uF 16V K
C7504	NDC31HJ-100X	C CAPACITOR	10pF 50V J
C7505	NDC31HJ-101X	C CAPACITOR	100pF 50V J
C7506	NCB31CK-103X	C CAPACITOR	0.01uF 16V K
C7507	NDC31HJ-100X	C CAPACITOR	10pF 50V J
C7508	NDC31HJ-100X	C CAPACITOR	10pF 50V J
C7510	NDC31HJ-100X	C CAPACITOR	10pF 50V J
C7514	NDC31HJ-100X	C CAPACITOR	10pF 50V J
C7515	NDC31HJ-100X	C CAPACITOR	10pF 50V J
C7516	NDC31HJ-100X	C CAPACITOR	10pF 50V J
C7517	NDC31HJ-100X	C CAPACITOR	10pF 50V J
C7601	NCB11CK-105X	C CAPACITOR	1uF 16V K
C7602	NCB31CK-104X	C CAPACITOR	0.1uF 16V K
C7603	NCB31CK-104X	C CAPACITOR	0.1uF 16V K
C7604	NCB31HK-102X	C CAPACITOR	1000pF 50V K
C7605	NCB31HK-221X	C CAPACITOR	220pF 50V K
C7606	NCB21AK-225X	C CAPACITOR	2.2uF 10V K
C7607	NCB31HK-681X	C CAPACITOR	680pF 50V K
C7608	NCB31CK-104X	C CAPACITOR	0.1uF 16V K
C7609	NCB31HK-681X	C CAPACITOR	680pF 50V K
C7610	NDC31HJ-102X	C CAPACITOR	1000pF 50V J
C7611	NDC31HJ-221X	C CAPACITOR	220pF 50V J
C7612	NCB21AK-225X	C CAPACITOR	2.2uF 10V K
C7615	NCB31CK-104X	C CAPACITOR	0.1uF 16V K
C7616	NCB31CK-104X	C CAPACITOR	0.1uF 16V K
C7617	NCB31CK-104X	C CAPACITOR	0.1uF 16V K
C7618	NCF11CZ-475X	C CAPACITOR	4.7uF 16V Z
C7619	NCB11AK-106X	C CAPACITOR	10uF 10V K
C7620	NCF11CZ-475X	C CAPACITOR	4.7uF 16V Z
C7621	NCB11AK-106X	C CAPACITOR	10uF 10V K
C7622	NCB31CK-104X	C CAPACITOR	0.1uF 16V K
C7623	NCB31CK-104X	C CAPACITOR	0.1uF 16V K
C7624	NCB31CK-104X	C CAPACITOR	0.1uF 16V K
C7625	NCB31CK-104X	C CAPACITOR	0.1uF 16V K
C7626	NCB31CK-104X	C CAPACITOR	0.1uF 16V K
C7629	NCB11AK-106X	C CAPACITOR	10uF 10V K
C7631	NCB31AK-224X	C CAPACITOR	0.22uF 10V K
C7632	NCB31AK-224X	C CAPACITOR	0.22uF 10V K
C7633	NDC31HJ-151X	C CAPACITOR	150pF 50V J
C9001	NDC31HJ-102X	C CAPACITOR	1000pF 50V J
C9002	NCJ41EK-106X-U	C CAPACITOR	10mF 25V K
C9003	NCB31EK-104X	C CAPACITOR	0.1uF 25V K
C9004	NCB31HK-103X	C CAPACITOR	0.01uF 50V K
C9005	NCJ41CK-226X-U	C CAPACITOR	22mF 16V K
C9006	NDC31HJ-120X	C CAPACITOR	12pF 50V J
C9007	NCB31HK-103X	C CAPACITOR	0.01uF 50V K
C9010	NCJ41CK-226X-U	C CAPACITOR	22mF 16V K
C9101	NCB11CK-475X	C CAPACITOR	4.7uF 16V K

⚠Ref No.	Part No.	Part Name	Description Local
C9103	NCB11CK-225X	C CAPACITOR	2.2uF 16V K
C9201	NDC31HJ-102X	C CAPACITOR	1000pF 50V J
C9202	NCJ41EK-106X-U	C CAPACITOR	10mF 25V K
C9204	NCB31HK-103X	C CAPACITOR	0.01uF 50V K
C9205	NCJ41CK-226X-U	C CAPACITOR	22mF 16V K
C9206	NDC31HJ-120X	C CAPACITOR	12pF 50V J
C9207	NCB31HK-153X	C CAPACITOR	0.015uF 50V K
C9208	NCJ41CK-226X-U	C CAPACITOR	22mF 16V K
C9209	NCB31HK-102X	C CAPACITOR	1000pF 50V K
C9211	NCB31CK-473X	C CAPACITOR	0.047uF 16V K
C9301	NDC31HJ-101X	C CAPACITOR	100pF 50V J
C9302	NCB11CK-475X	C CAPACITOR	4.7uF 16V K
C9303	NCB31HK-103X	C CAPACITOR	0.01uF 50V K
C9304	NCB11CK-475X	C CAPACITOR	4.7uF 16V K
C9306	NRSA63J-0R0X	MG RESISTOR	0Ω 1/16W J
C9313	NCB31HK-102X	C CAPACITOR	1000pF 50V K
C9314	NCB31HK-102X	C CAPACITOR	1000pF 50V K
R6002	NRSA63J-0R0X	MG RESISTOR	0Ω 1/16W J
R6003	NRSA63J-0R0X	MG RESISTOR	0Ω 1/16W J
R6006	NRSA63J-0R0X	MG RESISTOR	0Ω 1/16W J
R6008	NRSA63J-0R0X	MG RESISTOR	0Ω 1/16W J
R6009	NRSA63J-220X	MG RESISTOR	22Ω 1/16W J
R6014	NRSA63J-0R0X	MG RESISTOR	0Ω 1/16W J
R6017	NRSA63J-0R0X	MG RESISTOR	0Ω 1/16W J
R6018	NRSA63J-0R0X	MG RESISTOR	0Ω 1/16W J
R6019	NRSA63J-0R0X	MG RESISTOR	0Ω 1/16W J
R6020	NRSA63J-0R0X	MG RESISTOR	0Ω 1/16W J
R6026	NRSA63J-0R0X	MG RESISTOR	0Ω 1/16W J
R6028	NRSA63J-0R0X	MG RESISTOR	0Ω 1/16W J
R6031	NRSA63J-0R0X	MG RESISTOR	0Ω 1/16W J
R6032	NRSA63D-470X	MG RESISTOR	47Ω 1/16W D
R6033	NRSA63J-0R0X	MG RESISTOR	0Ω 1/16W J
R6034	NRSA63J-0R0X	MG RESISTOR	0Ω 1/16W J
R6037	NRSA63D-330X	MG RESISTOR	33Ω 1/16W D
R6055	NRS181J-0R0X	MG RESISTOR	0Ω 1/8W J
R6057	NRSA63J-220X	MG RESISTOR	22Ω 1/16W J
R6058	NRSA63J-220X	MG RESISTOR	22Ω 1/16W J
R6059	NRSA63J-101X	MG RESISTOR	100Ω 1/16W J
R6060	NRSA63J-0R0X	MG RESISTOR	0Ω 1/16W J
R6061	NRSA63J-0R0X	MG RESISTOR	0Ω 1/16W J
R6064	NRSA63J-220X	MG RESISTOR	22Ω 1/16W J
R6065	NRSA63J-220X	MG RESISTOR	22Ω 1/16W J
R6066	NRSA63J-220X	MG RESISTOR	22Ω 1/16W J
R6068	NRZ0080-0R0X	NET RESISTOR	0Ω 1/16W J
R6072	NRSA63J-0R0X	MG RESISTOR	0Ω 1/16W J
R6073	NRSA63J-0R0X	MG RESISTOR	0Ω 1/16W J
R6074	NRSA63J-0R0X	MG RESISTOR	0Ω 1/16W J
R6075	NRSA63J-0R0X	MG RESISTOR	0Ω 1/16W J
R6080	NRSA63J-0R0X	MG RESISTOR	0Ω 1/16W J
R6101	NRSA63J-220X	MG RESISTOR	22Ω 1/16W J
R6102	NRSA63J-220X	MG RESISTOR	22Ω 1/16W J
R6103	NRSA63J-220X	MG RESISTOR	22Ω 1/16W J
R6104	NRSA63J-220X	MG RESISTOR	22Ω 1/16W J
R6105	NRSA63J-220X	MG RESISTOR	22Ω 1/16W J
R6106	NRSA63J-220X	MG RESISTOR	22Ω 1/16W J
R6107	NRSA63J-100X	MG RESISTOR	10Ω 1/16W J
R6108	NRSA63J-100X	MG RESISTOR	10Ω 1/16W J
R6109	NRSA63J-220X	MG RESISTOR	22Ω 1/16W J
R6110	NRSA63J-220X	MG RESISTOR	22Ω 1/16W J
R6111	NRSA63J-220X	MG RESISTOR	22Ω 1/16W J
R6112	NRSA63J-470X	MG RESISTOR	47Ω 1/16W J
R6113	NRSA63J-470X	MG RESISTOR	47Ω 1/16W J
R6114	NRSA63J-470X	MG RESISTOR	47Ω 1/16W J
R6115	NRSA63J-470X	MG RESISTOR	47Ω 1/16W J
R6116	NRSA63J-470X	MG RESISTOR	47Ω 1/16W J
R6117	NRSA63J-470X	MG RESISTOR	47Ω 1/16W J
R6118	NRSA63J-470X	MG RESISTOR	47Ω 1/16W J
R6119	NRSA63J-470X	MG RESISTOR	47Ω 1/16W J
R6120	NRSA63J-470X	MG RESISTOR	47Ω 1/16W J
R6121	NRSA63J-470X	MG RESISTOR	47Ω 1/16W J
R6122	NRSA63J-470X	MG RESISTOR	47Ω 1/16W J
R6127	NRSA63J-1R5X	MG RESISTOR	1.5Ω 1/16W J
R6141	NRSA63J-0R0X	MG RESISTOR	0Ω 1/16W J
R6142	NRSA63J-0R0X	MG RESISTOR	0Ω 1/16W J
R6201	NRSA63J-0R0X	MG RESISTOR	0Ω 1/16W J
R6202	NRSA63J-0R0X	MG RESISTOR	0Ω 1/16W J
R6203	NRSA63J-0R0X	MG RESISTOR	0Ω 1/16W J
R6204	NRSA63J-0R0X	MG RESISTOR	0Ω 1/16W J
R6205	NRSA63J-332X	MG RESISTOR	3.3kΩ 1/16W J
R6207	NRSA63J-0R0X	MG RESISTOR	0Ω 1/16W J
R6209	NRSA63J-0R0X	MG RESISTOR	0Ω 1/16W J
R6214	NRSA63J-0R0X	MG RESISTOR	0Ω 1/16W J
R6215	NRSA63J-0R0X	MG RESISTOR	0Ω 1/16W J
R6216	NRSA63J-0R0X	MG RESISTOR	0Ω 1/16W J
R6217	NRSA63J-0R0X	MG RESISTOR	0Ω 1/16W J
R6220	NRSA63J-682X	MG RESISTOR	6.8kΩ 1/16W J
R6223	NRSA63J-0R0X	MG RESISTOR	0Ω 1/16W J
R6224	NRSA63J-0R0X	MG RESISTOR	0Ω 1/16W J
R6225	NRSA63J-0R0X	MG RESISTOR	0Ω 1/16W J

⚠Ref No.	Part No.	Part Name	Description Local
R6226	NRSA63J-0R0X	MG RESISTOR	0Ω 1/16W J
R6227	NRSA63J-391X	MG RESISTOR	390Ω 1/16W J
R6228	NRSA63J-332X	MG RESISTOR	3.3kΩ 1/16W J
R6229	NRSA63J-682X	MG RESISTOR	6.8kΩ 1/16W J
R6230	NRSA63J-0R0X	MG RESISTOR	0Ω 1/16W J
R6231	NRSA63J-0R0X	MG RESISTOR	0Ω 1/16W J
R6232	NRSA63J-0R0X	MG RESISTOR	0Ω 1/16W J
R6233	NRSA63J-0R0X	MG RESISTOR	0Ω 1/16W J
R6234	NRSA63J-391X	MG RESISTOR	390Ω 1/16W J
R6235	NRSA63J-101X	MG RESISTOR	100Ω 1/16W J
R6236	NRSA63J-331X	MG RESISTOR	330Ω 1/16W J
R6237	NRSA63J-332X	MG RESISTOR	3.3kΩ 1/16W J
R6238	NRSA63J-101X	MG RESISTOR	100Ω 1/16W J
R6239	NRSA63J-331X	MG RESISTOR	330Ω 1/16W J
R6240	NRSA63J-682X	MG RESISTOR	6.8kΩ 1/16W J
R6241	NRSA63J-101X	MG RESISTOR	100Ω 1/16W J
R6242	NRSA63J-331X	MG RESISTOR	330Ω 1/16W J
R6243	NRSA63J-102X	MG RESISTOR	1kΩ 1/16W J
R6244	NRSA63J-101X	MG RESISTOR	100Ω 1/16W J
R6245	NRSA63J-331X	MG RESISTOR	330Ω 1/16W J
R6246	NRSA63J-332X	MG RESISTOR	3.3kΩ 1/16W J
R6247	NRSA63J-682X	MG RESISTOR	6.8kΩ 1/16W J
R6248	NRSA63J-473X	MG RESISTOR	47kΩ 1/16W J
R6249	NRSA63J-333X	MG RESISTOR	33kΩ 1/16W J
R6251	NRSA63J-0R0X	MG RESISTOR	0Ω 1/16W J
R6252	NRSA63J-0R0X	MG RESISTOR	0Ω 1/16W J
R6253	NRSA63J-222X	MG RESISTOR	2.2kΩ 1/16W J
R6254	NRSA63J-151X	MG RESISTOR	150Ω 1/16W J
R6255	NRSA63J-472X	MG RESISTOR	4.7kΩ 1/16W J
R6256	NRSA63J-0R0X	MG RESISTOR	0Ω 1/16W J
R6257	NRSA63J-222X	MG RESISTOR	2.2kΩ 1/16W J
R6258	NRSA63J-151X	MG RESISTOR	150Ω 1/16W J
R6259	NRSA63J-472X	MG RESISTOR	4.7kΩ 1/16W J
R6260	NRSA63J-0R0X	MG RESISTOR	0Ω 1/16W J
R6261	NRSA63J-222X	MG RESISTOR	2.2kΩ 1/16W J
R6262	NRSA63J-151X	MG RESISTOR	150Ω 1/16W J
R6263	NRSA63J-472X	MG RESISTOR	4.7kΩ 1/16W J
R6264	NRSA63J-0R0X	MG RESISTOR	0Ω 1/16W J
R6265	NRSA63J-103X	MG RESISTOR	10kΩ 1/16W J
R6266	NRSA63J-221X	MG RESISTOR	220Ω 1/16W J
R6267	NRSA63J-472X	MG RESISTOR	4.7kΩ 1/16W J
R6268	NRSA63D-242X	MG RESISTOR	2.4kΩ 1/16W D
R6269	NRSA63D-242X	MG RESISTOR	2.4kΩ 1/16W D
R6270	NRSA63D-242X	MG RESISTOR	2.4kΩ 1/16W D
R6271	NRSA63D-242X	MG RESISTOR	2.4kΩ 1/16W D
R6273	NRSA63J-0R0X	MG RESISTOR	0Ω 1/16W J
R6274	NRSA63J-220X	MG RESISTOR	22Ω 1/16W J
R6275	NRSA63J-0R0X	MG RESISTOR	0Ω 1/16W J
R6276	NRSA63J-0R0X	MG RESISTOR	0Ω 1/16W J
R6277	NRSA63J-391X	MG RESISTOR	390Ω 1/16W J
R6279	NRSA63J-0R0X	MG RESISTOR	0Ω 1/16W J
R6280	NRSA63J-331X	MG RESISTOR	330Ω 1/16W J
R6281	NRSA63J-101X	MG RESISTOR	100Ω 1/16W J
R6282	NRSA63J-331X	MG RESISTOR	330Ω 1/16W J
R6283	NRSA63J-101X	MG RESISTOR	100Ω 1/16W J
R6284	NRSA63J-0R0X	MG RESISTOR	0Ω 1/16W J
R6285	NRSA63J-0R0X	MG RESISTOR	0Ω 1/16W J
R6286	NRSA63J-391X	MG RESISTOR	390Ω 1/16W J
R6287	NRSA63J-391X	MG RESISTOR	390Ω 1/16W J
R6288	NRSA63J-391X	MG RESISTOR	390Ω 1/16W J
R6289	NRSA63J-102X	MG RESISTOR	1kΩ 1/16W J
R6290	NRSA63J-0R0X	MG RESISTOR	0Ω 1/16W J
R6291	NRSA63J-473X	MG RESISTOR	47kΩ 1/16W J
R6292	NRSA63J-473X	MG RESISTOR	47kΩ 1/16W J
R6300	NRSA63J-0R0X	MG RESISTOR	0Ω 1/16W J
R6302	NRSA63J-0R0X	MG RESISTOR	0Ω 1/16W J
R6305	NRSA63J-0R0X	MG RESISTOR	0Ω 1/16W J
R6332	NRSA63J-0R0X	MG RESISTOR	0Ω 1/16W J
R6333	NRSA63J-0R0X	MG RESISTOR	0Ω 1/16W J
R6338	NRSA63J-0R0X	MG RESISTOR	0Ω 1/16W J
R6339	NRSA63J-0R0X	MG RESISTOR	0Ω 1/16W J
R6501	NRSA63J-101X	MG RESISTOR	100Ω 1/16W J
R6502	NRSA63J-101X	MG RESISTOR	100Ω 1/16W J
R6503	NRSA63J-0R0X	MG RESISTOR	0Ω 1/16W J
R6505	NRSA63J-102X	MG RESISTOR	1kΩ 1/16W J
R6508	NRSA63J-0R0X	MG RESISTOR	0Ω 1/16W J
R6509	NRSA63J-102X	MG RESISTOR	1kΩ 1/16W J
R6511	NRSA63J-102X	MG RESISTOR	1kΩ 1/16W J
R6514	NRSA63J-0R0X	MG RESISTOR	0Ω 1/16W J
R6534	NRSA63J-0R0X	MG RESISTOR	0Ω 1/16W J
R6568	NRSA63J-0R0X	MG RESISTOR	0Ω 1/16W J
R6571	NRSA63J-0R0X	MG RESISTOR	0Ω 1/16W J
R6572	NRSA63J-0R0X	MG RESISTOR	0Ω 1/16W J
R6573	NRSA63J-0R0X	MG RESISTOR	0Ω 1/16W J
R6574	NRSA63J-0R0X	MG RESISTOR	0Ω 1/16W J
R6575	NRSA63J-0R0X	MG RESISTOR	0Ω 1/16W J
R6576	NRSA63J-0R0X	MG RESISTOR	0Ω 1/16W J
R6598	NRSA63J-104X	MG RESISTOR	100kΩ 1/16W J
R6607	NRSA63J-101X	MG RESISTOR	100Ω 1/16W J
R6609	NRSA63J-101X	MG RESISTOR	100Ω 1/16W J

⚠Ref No.	Part No.	Part Name	Description Local
R6611	NRSA63J-102X	MG RESISTOR	1kΩ 1/16W J
R6707	NRSA63J-0R0X	MG RESISTOR	0Ω 1/16W J
R6712	NRSA63J-0R0X	MG RESISTOR	0Ω 1/16W J
R6713	NRSA63J-0R0X	MG RESISTOR	0Ω 1/16W J
R6730	NRSA63J-0R0X	MG RESISTOR	0Ω 1/16W J
R6731	NRSA63J-0R0X	MG RESISTOR	0Ω 1/16W J
R6732	NRSA63J-0R0X	MG RESISTOR	0Ω 1/16W J
R6921	NRSA63J-0R0X	MG RESISTOR	0Ω 1/16W J
R6923	NRSA63J-0R0X	MG RESISTOR	0Ω 1/16W J
R6924	NRSA63J-0R0X	MG RESISTOR	0Ω 1/16W J
R6943	NRSA63J-150X	MG RESISTOR	15Ω 1/16W J
R6946	NRSA63D-220X	MG RESISTOR	22Ω 1/16W D
R6953	NRSA63J-0R0X	MG RESISTOR	0Ω 1/16W J
R7030	NRSA63J-0R0X	MG RESISTOR	0Ω 1/16W J
R7031	NRSA63J-0R0X	MG RESISTOR	0Ω 1/16W J
R7032	NRSA63J-151X	MG RESISTOR	150Ω 1/16W J
R7033	NRSA63J-0R0X	MG RESISTOR	0Ω 1/16W J
R7034	NRSA63J-0R0X	MG RESISTOR	0Ω 1/16W J
R7040	NRSA63J-0R0X	MG RESISTOR	0Ω 1/16W J
R7041	NRSA63J-223X	MG RESISTOR	22kΩ 1/16W J
R7047	NRSA63J-0R0X	MG RESISTOR	0Ω 1/16W J
R7049	NRSA63J-0R0X	MG RESISTOR	0Ω 1/16W J
R7051	NRSA63J-0R0X	MG RESISTOR	0Ω 1/16W J
R7052	NRSA63J-473X	MG RESISTOR	47kΩ 1/16W J
R7054	NRSA63J-0R0X	MG RESISTOR	0Ω 1/16W J
R7055	NRSA63J-0R0X	MG RESISTOR	0Ω 1/16W J
R7056	NRSA63J-0R0X	MG RESISTOR	0Ω 1/16W J
R7057	NRSA63J-0R0X	MG RESISTOR	0Ω 1/16W J
R7058	NRSA63J-0R0X	MG RESISTOR	0Ω 1/16W J
R7059	NRSA63J-0R0X	MG RESISTOR	0Ω 1/16W J
R7061	NRSA63J-0R0X	MG RESISTOR	0Ω 1/16W J
R7062	NRSA63J-0R0X	MG RESISTOR	0Ω 1/16W J
R7063	NRSA63J-0R0X	MG RESISTOR	0Ω 1/16W J
R7064	NRSA63J-103X	MG RESISTOR	10kΩ 1/16W J
R7065	NRSA63J-103X	MG RESISTOR	10kΩ 1/16W J
R7066	NRSA63J-562X	MG RESISTOR	5.6kΩ 1/16W J
R7067	NRSA63J-562X	MG RESISTOR	5.6kΩ 1/16W J
R7068	NRSA63J-0R0X	MG RESISTOR	0Ω 1/16W J
R7069	NRSA63J-0R0X	MG RESISTOR	0Ω 1/16W J
R7070	NRSA63J-0R0X	MG RESISTOR	0Ω 1/16W J
R7071	NRSA63J-0R0X	MG RESISTOR	0Ω 1/16W J
R7077	NRSA63J-331X	MG RESISTOR	330Ω 1/16W J
R7078	NRSA63J-331X	MG RESISTOR	330Ω 1/16W J
R7081	NRSA63J-473X	MG RESISTOR	47kΩ 1/16W J
R7084	NRSA63J-221X	MG RESISTOR	220Ω 1/16W J
R7085	NRSA63J-221X	MG RESISTOR	220Ω 1/16W J
R7086	NRSA63J-0R0X	MG RESISTOR	0Ω 1/16W J
R7087	NRSA63J-0R0X	MG RESISTOR	0Ω 1/16W J
R7088	NRSA63J-0R0X	MG RESISTOR	0Ω 1/16W J
R7089	NRSA63J-0R0X	MG RESISTOR	0Ω 1/16W J
R7090	NRSA63J-0R0X	MG RESISTOR	0Ω 1/16W J
R7091	NRSA63J-0R0X	MG RESISTOR	0Ω 1/16W J
R7092	NRSA63J-101X	MG RESISTOR	100Ω 1/16W J
R7093	NRSA63J-101X	MG RESISTOR	100Ω 1/16W J
R7094	NRSA63J-101X	MG RESISTOR	100Ω 1/16W J
R7095	NRSA63J-0R0X	MG RESISTOR	0Ω 1/16W J
R7097	NRSA63J-0R0X	MG RESISTOR	0Ω 1/16W J
R7098	NRSA63J-0R0X	MG RESISTOR	0Ω 1/16W J
R7099	NRSA63J-0R0X	MG RESISTOR	0Ω 1/16W J
R7100	NRSA63J-0R0X	MG RESISTOR	0Ω 1/16W J
R7103	NRSA63J-0R0X	MG RESISTOR	0Ω 1/16W J
R7106	NRSA63J-0R0X	MG RESISTOR	0Ω 1/16W J
R7110	NRSA63J-0R0X	MG RESISTOR	0Ω 1/16W J
R7113	NRSA63J-0R0X	MG RESISTOR	0Ω 1/16W J
R7123	NRSA63J-0R0X	MG RESISTOR	0Ω 1/16W J
R7124	NRSA63J-0R0X	MG RESISTOR	0Ω 1/16W J
R7128	NRSA63J-0R0X	MG RESISTOR	0Ω 1/16W J
R7170	NRSA63J-0R0X	MG RESISTOR	0Ω 1/16W J
R7171	NRSA63J-0R0X	MG RESISTOR	0Ω 1/16W J
R7172	NRSA63J-0R0X	MG RESISTOR	0Ω 1/16W J
R7173	NRSA63J-0R0X	MG RESISTOR	0Ω 1/16W J
R7174	NRSA63J-473X	MG RESISTOR	47kΩ 1/16W J
R7175	NRSA63J-0R0X	MG RESISTOR	0Ω 1/16W J
R7176	NRSA63J-0R0X	MG RESISTOR	0Ω 1/16W J
R7177	NRSA63J-0R0X	MG RESISTOR	0Ω 1/16W J
R7178	NRSA63J-0R0X	MG RESISTOR	0Ω 1/16W J
R7179	NRSA63J-0R0X	MG RESISTOR	0Ω 1/16W J
R7184	NRSA63J-0R0X	MG RESISTOR	0Ω 1/16W J
R7186	NCB31HK-103X	C CAPACITOR	0.01uF 50V K
R7187	NRSA63J-0R0X	MG RESISTOR	0Ω 1/16W J
R7192	NRSA63J-0R0X	MG RESISTOR	0Ω 1/16W J
R7201	NRSA63J-473X	MG RESISTOR	47kΩ 1/16W J
R7202	NRSA63J-473X	MG RESISTOR	47kΩ 1/16W J
R7203	NRSA63J-473X	MG RESISTOR	47kΩ 1/16W J
R7207	NRSA63J-101X	MG RESISTOR	100Ω 1/16W J
R7208	NRSA63J-0R0X	MG RESISTOR	0Ω 1/16W J
R7211	NRSA63J-0R0X	MG RESISTOR	0Ω 1/16W J
R7214	NRSA63J-0R0X	MG RESISTOR	0Ω 1/16W J
R7215	NRSA63J-473X	MG RESISTOR	47kΩ 1/16W J
R7216	NRSA63J-473X	MG RESISTOR	47kΩ 1/16W J
R7217	NRSA63J-473X	MG RESISTOR	47kΩ 1/16W J
R7221	NRSA63J-0R0X	MG RESISTOR	0Ω 1/16W J
R7223	NRSA63J-473X	MG RESISTOR	47kΩ 1/16W J
R7224	NRSA63J-473X	MG RESISTOR	47kΩ 1/16W J
R7225	NRSA63J-473X	MG RESISTOR	47kΩ 1/16W J
R7239	NRSA63J-103X	MG RESISTOR	10kΩ 1/16W J
R7240	NQR0599-003X	FERRITE BEADS	
R7349	NRSA63J-103X	MG RESISTOR	10kΩ 1/16W J
R7350	NRSA63J-103X	MG RESISTOR	10kΩ 1/16W J
R7351	NRSA63J-103X	MG RESISTOR	10kΩ 1/16W J
R7504	NRSA63J-104X	MG RESISTOR	100kΩ 1/16W J
R7505	NRSA63J-103X	MG RESISTOR	10kΩ 1/16W J
R7512	NRSA63J-0R0X	MG RESISTOR	0Ω 1/16W J
R7513	NRSA63J-0R0X	MG RESISTOR	0Ω 1/16W J
R7514	NRSA63J-0R0X	MG RESISTOR	0Ω 1/16W J
R7515	NRSA63J-102X	MG RESISTOR	1kΩ 1/16W J
R7601	NRSA63J-103X	MG RESISTOR	10kΩ 1/16W J
R7602	NRSA63J-103X	MG RESISTOR	10kΩ 1/16W J
R7603	NRSA63J-0R0X	MG RESISTOR	0Ω 1/16W J
R7604	NRSA63J-0R0X	MG RESISTOR	0Ω 1/16W J
R7605	NRSA63J-471X	MG RESISTOR	470Ω 1/16W J
R7606	NRSA63J-105X	MG RESISTOR	1MΩ 1/16W J
R7607	NRSA63J-682X	MG RESISTOR	6.8kΩ 1/16W J
R7608	NRSA63J-105X	MG RESISTOR	1MΩ 1/16W J
R7609	NRSA63J-0R0X	MG RESISTOR	0Ω 1/16W J
R7610	NRSA63J-0R0X	MG RESISTOR	0Ω 1/16W J
R7611	NRSA63J-102X	MG RESISTOR	1kΩ 1/16W J
R7612	NRSA63J-471X	MG RESISTOR	470Ω 1/16W J
R7613	NRSA63J-102X	MG RESISTOR	1kΩ 1/16W J
R7614	NRSA63J-0R0X	MG RESISTOR	0Ω 1/16W J
R7615	NRSA63J-0R0X	MG RESISTOR	0Ω 1/16W J
R7616	NRSA63J-0R0X	MG RESISTOR	0Ω 1/16W J
R7618	NRSA63J-0R0X	MG RESISTOR	0Ω 1/16W J
R7619	NRSA63J-0R0X	MG RESISTOR	0Ω 1/16W J
R7620	NRSA63J-102X	MG RESISTOR	1kΩ 1/16W J
R7622	NRSA63J-0R0X	MG RESISTOR	0Ω 1/16W J
R7623	NRSA63J-0R0X	MG RESISTOR	0Ω 1/16W J
R7624	NRSA63J-0R0X	MG RESISTOR	0Ω 1/16W J
R7625	NRSA63J-0R0X	MG RESISTOR	0Ω 1/16W J
R7626	NRSA63J-0R0X	MG RESISTOR	0Ω 1/16W J
R7627	NRSA63J-0R0X	MG RESISTOR	0Ω 1/16W J
R7628	NRSA63J-333X	MG RESISTOR	33kΩ 1/16W J
R7631	NRSA63J-821X	MG RESISTOR	820Ω 1/16W J
R7632	NRSA63J-222X	MG RESISTOR	2.2kΩ 1/16W J
R7634	NRSA63J-821X	MG RESISTOR	820Ω 1/16W J
R7635	NRSA63J-222X	MG RESISTOR	2.2kΩ 1/16W J
R7636	NRSA63J-102X	MG RESISTOR	1kΩ 1/16W J
R7637	NRSA63J-102X	MG RESISTOR	1kΩ 1/16W J
R7639	NRSA63J-103X	MG RESISTOR	10kΩ 1/16W J
R7640	NRSA63J-103X	MG RESISTOR	10kΩ 1/16W J
R7643	NRSA63J-0R0X	MG RESISTOR	0Ω 1/16W J
R7644	NRSA63J-0R0X	MG RESISTOR	0Ω 1/16W J
R7646	NRSA63J-0R0X	MG RESISTOR	0Ω 1/16W J
R7649	NRSA63J-103X	MG RESISTOR	10kΩ 1/16W J
R7652	NRSA63J-0R0X	MG RESISTOR	0Ω 1/16W J
R7653	NRSA63J-0R0X	MG RESISTOR	0Ω 1/16W J
R7658	NRSA63J-103X	MG RESISTOR	10kΩ 1/16W J
R7659	NRSA63J-560X	MG RESISTOR	56Ω 1/16W J
R8796	NRSA63J-0R0X	MG RESISTOR	0Ω 1/16W J
R8797	NRSA63J-0R0X	MG RESISTOR	0Ω 1/16W J
R8798	NRSA63J-0R0X	MG RESISTOR	0Ω 1/16W J
R8799	NRSA63J-0R0X	MG RESISTOR	0Ω 1/16W J
R9001	NRSA63J-473X	MG RESISTOR	47kΩ 1/16W J
R9002	NRSA02J-0R0X	MG RESISTOR	0Ω 1/10W J
R9003	NRSA63D-273X	MG RESISTOR	27kΩ 1/16W D
R9004	NRSA63J-684X	MG RESISTOR	680kΩ 1/16W J
R9005	NRSA63D-103X	MG RESISTOR	10kΩ 1/16W D
R9006	NRSA63J-512X	MG RESISTOR	5.1kΩ 1/16W J
R9007	NRSA02J-0R0X	MG RESISTOR	0Ω 1/10W J
R9008	NRSA63J-0R0X	MG RESISTOR	0Ω 1/16W J
R9201	NRSA63J-473X	MG RESISTOR	47kΩ 1/16W J
R9202	NRSA02J-0R0X	MG RESISTOR	0Ω 1/10W J
R9203	NRSA63D-302X	MG RESISTOR	3kΩ 1/16W D
R9205	NRSA63D-103X	MG RESISTOR	10kΩ 1/16W D
R9206	NRSA63J-332X	MG RESISTOR	3.3kΩ 1/16W J
R9207	NRSA02J-0R0X	MG RESISTOR	0Ω 1/10W J
R9209	NRSA63J-0R0X	MG RESISTOR	0Ω 1/16W J
R9302	NRSA02J-0R0X	MG RESISTOR	0Ω 1/10W J
R9306	NRSA02J-0R0X	MG RESISTOR	0Ω 1/10W J
R9308	NRSA63J-0R0X	MG RESISTOR	0Ω 1/16W J
R9510	NRSA63J-104X	MG RESISTOR	100kΩ 1/16W J
RA6001	NRZ0080-0R0X	NET RESISTOR	0Ω 1/16W J
RA6002	NRZ0034-0R0W	NET RESISTOR	0Ω 1/32W J x4
RA6007	NRZ0080-0R0X	NET RESISTOR	0Ω 1/16W J
RA6008	NRZ0080-0R0X	NET RESISTOR	0Ω 1/16W J
RA6009	NRZ0034-0R0W	NET RESISTOR	0Ω 1/32W J x4
RA6010	NRZ0034-0R0W	NET RESISTOR	0Ω 1/32W J x4
RA6011	NRZ0080-0R0X	NET RESISTOR	0Ω 1/16W J
RA6101	NRZ0040-220X	NET RESISTOR	22Ω 1/16W J x4
RA6102	NRZ0080-220X	NET RESISTOR	22Ω 1/16W J

⚠Ref No.	Part No.	Part Name	Description	Local
RA6103	NRZ0040-220X	NET RESISTOR	22Ω 1/16W J x4	
RA6104	NRZ0040-220X	NET RESISTOR	22Ω 1/16W J x4	
RA6105	NRZ0080-220X	NET RESISTOR	22Ω 1/16W J	
RA6106	NRZ0040-220X	NET RESISTOR	22Ω 1/16W J x4	
RA6107	NRZ0080-220X	NET RESISTOR	22Ω 1/16W J	
RA6108	NRZ0080-220X	NET RESISTOR	22Ω 1/16W J	
RA6109	NRZ0040-470X	NET RESISTOR	47Ω 1/16W J x4	
RA6110	NRZ0080-470X	NET RESISTOR	47Ω 1/16W J	
RA6111	NRZ0040-470X	NET RESISTOR	47Ω 1/16W J x4	
RA6112	NRZ0040-470X	NET RESISTOR	47Ω 1/16W J x4	
RA6113	NRZ0080-470X	NET RESISTOR	47Ω 1/16W J	
RA6114	NRZ0040-470X	NET RESISTOR	47Ω 1/16W J x4	
RA6115	NRZ0080-470X	NET RESISTOR	47Ω 1/16W J	
RA6116	NRZ0080-470X	NET RESISTOR	47Ω 1/16W J	
RA6501	NRZ0034-0R0W	NET RESISTOR	0Ω 1/32W J x4	
RA6502	NRZ0034-0R0W	NET RESISTOR	0Ω 1/32W J x4	
RA6503	NRZ0034-0R0W	NET RESISTOR	0Ω 1/32W J x4	
RA6504	NRZ0080-0R0X	NET RESISTOR	0Ω 1/16W J	
RA6505	NRZ0080-0R0X	NET RESISTOR	0Ω 1/16W J	
RA6506	NRZ0080-0R0X	NET RESISTOR	0Ω 1/16W J	
RA6541	NRZ0033-0R0W	NET RESISTOR	0Ω	
RA6542	NRZ0080-0R0X	NET RESISTOR	0Ω 1/16W J	
RA6543	NRZ0033-0R0W	NET RESISTOR	0Ω	
RA6544	NRZ0080-0R0X	NET RESISTOR	0Ω 1/16W J	
RA6545	NRZ0033-0R0W	NET RESISTOR	0Ω	
RA6546	NRZ0080-0R0X	NET RESISTOR	0Ω 1/16W J	
RA7202	NRZ0080-473X	NET RESISTOR	47kΩ	
RA7203	NRZ0080-473X	NET RESISTOR	47kΩ	
RA7204	NRZ0080-473X	NET RESISTOR	47kΩ	
RA7205	NRZ0080-473X	NET RESISTOR	47kΩ	
RA7503	NQR0271-004X	EMI FILTER		
RA7601	NRZ0034-0R0W	NET RESISTOR	0Ω 1/32W J x4	
RA7602	NRZ0034-0R0W	NET RESISTOR	0Ω 1/32W J x4	
RA7603	NRZ0034-0R0W	NET RESISTOR	0Ω 1/32W J x4	
RA7605	NRZ0034-0R0W	NET RESISTOR	0Ω 1/32W J x4	
RA7606	NRZ0034-101W	NET RESISTOR	100Ω 1/32W J x4	
L6051	NRSA02J-0R0X	MG RESISTOR	0Ω 1/10W J	
L6101	NRSA02J-0R0X	MG RESISTOR	0Ω 1/10W J	
L6102	NQLE3GK-220X	COIL	22uH K	
L6103	NQLE3GK-220X	COIL	22uH K	
L6115	NQR0499-001X	FERRITE BEADS		
L6254	NRSA02J-0R0X	MG RESISTOR	0Ω 1/10W J	
L6265	NQR0499-001X	FERRITE BEADS		
L6266	NQR0499-001X	FERRITE BEADS		
L6511	NRZ0034-0R0W	NET RESISTOR	0Ω 1/32W J x4	
L6512	NRZ0034-0R0W	NET RESISTOR	0Ω 1/32W J x4	
L6513	NRZ0034-0R0W	NET RESISTOR	0Ω 1/32W J x4	
L6514	NRZ0034-0R0W	NET RESISTOR	0Ω 1/32W J x4	
L6515	NRZ0034-0R0W	NET RESISTOR	0Ω 1/32W J x4	
L6516	NRZ0034-0R0W	NET RESISTOR	0Ω 1/32W J x4	
L6531	NQR0199-007X	FERRITE BEADS		
L6701	NQR0413-003X	FERRITE BEADS		
L6911	NQR0499-001X	FERRITE BEADS		
L6912	NQR0499-001X	FERRITE BEADS		
L6922	NQLE3GK-220X	COIL	22uH K	
L6924	NQLE3GK-220X	COIL	22uH K	
L6925	NQLE3GK-220X	COIL	22uH K	
L6931	NQR0499-001X	FERRITE BEADS		
L7501	NRSA63J-0R0X	MG RESISTOR	0Ω 1/16W J	
L7502	NRSA63J-0R0X	MG RESISTOR	0Ω 1/16W J	
L9001	NQLC8CM-150X	COIL	15uH M	
L9201	NQLC8CM-150X	COIL	15uH M	
L9204	NQR0562-014X	CHOKE COIL		
L9306	NRSA02J-0R0X	MG RESISTOR	0Ω 1/10W J	
232C	WJJ0654-001A-E	E-SI C WIRE C-C		
CN011	QGF0508F4-50X	CONNECTOR	FFC/FPC (1-50)	
CN012	QGF0508F4-40X	CONNECTOR	FFC/FPC (1-40)	
CN110	QGB0603L1-B0	CONNECTOR	B-B (1-110)	
J7601	QNZ0587-001	D CONNECTOR	RS-232C	
J8501	NNZ0117-001	CONNECTOR	DIGITAL IN-2	
J8502	NNZ0117-001	CONNECTOR	DIGITAL IN-1	
K6052	NQR0489-002X	FERRITE BEADS		
K6250	NRSA02J-0R0X	MG RESISTOR	0Ω 1/10W J	
K6268	NRSA02J-0R0X	MG RESISTOR	0Ω 1/10W J	
K6271	NQR0499-001X	FERRITE BEADS		
K6272	NQR0499-001X	FERRITE BEADS		
K6274	NQR0499-001X	FERRITE BEADS		
K6921	NRSA02J-0R0X	MG RESISTOR	0Ω 1/10W J	
K7032	NRSA02J-0R0X	MG RESISTOR	0Ω 1/10W J	
K7033	NRSA02J-0R0X	MG RESISTOR	0Ω 1/10W J	
K7034	NRSA02J-0R0X	MG RESISTOR	0Ω 1/10W J	
K7202	NRSA63J-0R0X	MG RESISTOR	0Ω 1/16W J	
K7211	NQR0499-002X	FERRITE BEADS		
K7501	NQR0413-002X	FERRITE BEADS		
K7504	NRSA63J-0R0X	MG RESISTOR	0Ω 1/16W J	
K7601	NRSA02J-0R0X	MG RESISTOR	0Ω 1/10W J	
LC7505	NQR0483-005X	EMI FILTER	100uF 25V Z	
LC9301	NQR0470-003X	EMI FILTER	100pF 50V	
LC9303	NQR0483-005X	EMI FILTER	100uF 25V Z	
LC9305	NQR0483-005X	EMI FILTER	100uF 25V Z	
LC9307	NQR0483-005X	EMI FILTER	100uF 25V Z	
X6250	NAX0580-001X	CXO	27.0000MHz	
X6250	NAX0824-001X	CXO	27.000000MHz	
X7001	NAX0669-001X	C RESONATOR	6.000MHz	
X7601	NAX0613-001X	C RESONATOR	16.000MHz	

SIDE CONTROL P.W. BOARD ASS'Y (SRA0L012A-M2)

⚠Ref No.	Part No.	Part Name	Description	Local
D0843	UDZW10B-X	Z DIODE		
D0844	UDZW10B-X	Z DIODE		
D0845	UDZW10B-X	Z DIODE		
C0843	QETN1HM-106Z	E CAPACITOR	10uF 50V M	
C0844	NCB21CK-105X	C CAPACITOR	1uF 16V K	
C0845	NCB21CK-105X	C CAPACITOR	1uF 16V K	
R0844	NRSA63J-750X	MG RESISTOR	75Ω 1/16W J	
R0845	NRSA63J-224X	MG RESISTOR	220kΩ 1/16W J	
R0846	NRSA63J-224X	MG RESISTOR	220kΩ 1/16W J	
R0849	NRSA63J-0R0X	MG RESISTOR	0Ω 1/16W J	
R0851	NRSA63J-562X	MG RESISTOR	5.6kΩ 1/16W J	
R0852	NRSA63J-153X	MG RESISTOR	15kΩ 1/16W J	
R0853	NRSA63J-562X	MG RESISTOR	5.6kΩ 1/16W J	
R0854	NRSA63J-153X	MG RESISTOR	15kΩ 1/16W J	
J0841	QNN0787-002	PIN JACK	INPUT-4(S/V/L/R)	
S0851	QSW0619-003Z	PUSH SWITCH	MENU	
S0852	QSW0619-003Z	PUSH SWITCH	CH+	
S0853	QSW0619-003Z	PUSH SWITCH	CH-	
S0854	QSW0619-003Z	PUSH SWITCH	VOL-	
S0855	QSW0619-003Z	PUSH SWITCH	VOL+	
S0856	QSW0619-003Z	PUSH SWITCH	INPUT	

FRONT LED P.W. BOARD ASS'Y (SRA0L113A-M2)

⚠Ref No.	Part No.	Part Name	Description	Local
Q0901	2SC3928A/QR/-X	TRANSISTOR		
Q0902	2SC3928A/QR/-X	TRANSISTOR		
Q0904	2SC3928A/QR/-X	TRANSISTOR		
Q0905	2SC3928A/QR/-X	TRANSISTOR		
Q0906	2SC3928A/QR/-X	TRANSISTOR		
Q0907	2SC3928A/QR/-X	TRANSISTOR		
D0901	SELU5E20C/EF/-T	LED	POWER	
D0903	MA8068-X	Z DIODE		
D0904	MA8068-X	Z DIODE		
D0905	SLR-343DC	LED	LAMP	
D0906	MA8068-X	Z DIODE		
D0907	MA8068-X	Z DIODE		
C0901	NCB31HK-102X	C CAPACITOR	1000pF 50V K	
C0902	NCB31HK-102X	C CAPACITOR	1000pF 50V K	
C0903	NDC31HJ-100X	C CAPACITOR	10pF 50V J	
C0904	NDC31HJ-100X	C CAPACITOR	10pF 50V J	
C0905	NDC31HJ-100X	C CAPACITOR	10pF 50V J	
C0906	NDC31HJ-100X	C CAPACITOR	10pF 50V J	
R0906	NRSA63J-472X	MG RESISTOR	4.7kΩ 1/16W J	
R0907	NRSA63J-103X	MG RESISTOR	10kΩ 1/16W J	
R0908	NRSA63J-333X	MG RESISTOR	33kΩ 1/16W J	
R0909	NRSA63J-333X	MG RESISTOR	33kΩ 1/16W J	
R0910	NRSA63J-182X	MG RESISTOR	1.8kΩ 1/16W J	
R0911	NRSA63J-153X	MG RESISTOR	15kΩ 1/16W J	
R0912	NRSA63J-333X	MG RESISTOR	33kΩ 1/16W J	
R0913	NRSA63J-333X	MG RESISTOR	33kΩ 1/16W J	
R0914	NRSA63J-333X	MG RESISTOR	33kΩ 1/16W J	
R0915	NRSA63J-333X	MG RESISTOR	33kΩ 1/16W J	
R0916	NRSA63J-152X	MG RESISTOR	1.5kΩ 1/16W J	
S0901	QSW0619-003Z	PUSH SWITCH	POWER	

LAMP COVER P.W. BOARD ASS'Y (SRA0L211A-M2)

⚠Ref No.	Part No.	Part Name	Description	Local
C0861	NCB31EK-104X	C CAPACITOR	0.1uF 25V K	
CN08G3	QUB130-32EMZ4-E	SIN TWIST WIRE		
S0861	QSW1064-001	DETECT SWITCH	LAMP COVER SW	

TUNER P.W. BOARD ASS'Y (SRA0R013A-M2)

⚠Ref No.	Part No.	Part Name	Description	Local
IC061	CXA2205Q-X	IC		
Q004	2SA1530A/QR/-X	TRANSISTOR		
Q005	2SC3928A/QR/-X	TRANSISTOR		
C004	NCB31HK-103X	C CAPACITOR	0.01uF 50V K	
C005	QETN0JM-477Z	E CAPACITOR	470uF 6.3V M	
C006	NCB31HK-103X	C CAPACITOR	0.01uF 50V K	
C007	QETN1HM-106Z	E CAPACITOR	10uF 50V M	
C008	NCB31HK-222X	C CAPACITOR	2200pF 50V K	
C009	QETN1HM-106Z	E CAPACITOR	10uF 50V M	
C010	NCB31CK-104X	C CAPACITOR	0.1uF 16V K	
C013	QETN0JM-477Z	E CAPACITOR	470uF 6.3V M	
C061	NCB31CK-104X	C CAPACITOR	0.1uF 16V K	
C062	QENC1HM-475Z	BP E CAPACITOR	4.7uF 50V M	
C063	NCB31HK-562X	C CAPACITOR	5600pF 50V K	
C064	NCB31HK-123X	C CAPACITOR	0.012uF 50V K	
C065	NCB31CK-105X	C CAPACITOR	1uF 16V K	
C066	QENC1HM-475Z	BP E CAPACITOR	4.7uF 50V M	
C067	NCB11AK-106X	C CAPACITOR	10uF 10V K	
C068	QENC1HM-475Z	BP E CAPACITOR	4.7uF 50V M	
C069	QETN1CM-476Z	E CAPACITOR	47uF 16V M	
C070	QENC1HM-475Z	BP E CAPACITOR	4.7uF 50V M	
C071	QENC1HM-475Z	BP E CAPACITOR	4.7uF 50V M	
C072	QENC1HM-475Z	BP E CAPACITOR	4.7uF 50V M	
C073	NCB31HK-272X	C CAPACITOR	2700pF 50V K	
C074	NCB31HK-473X	C CAPACITOR	0.047uF 50V K	
C075	NCB11AK-335X	C CAPACITOR	3.3uF 10V K	
C076	QENC1HM-475Z	BP E CAPACITOR	4.7uF 50V M	
C077	NCB11AK-106X	C CAPACITOR	10uF 10V K	
C078	NCB31CK-105X	C CAPACITOR	1uF 16V K	
C079	NCB31CK-104X	C CAPACITOR	0.1uF 16V K	
C080	NCB31CK-104X	C CAPACITOR	0.1uF 16V K	
C081	NCB31CK-104X	C CAPACITOR	0.1uF 16V K	
C082	NCB31CK-104X	C CAPACITOR	0.1uF 16V K	
C083	NCB31CK-104X	C CAPACITOR	0.1uF 16V K	
C084	NCB31CK-104X	C CAPACITOR	0.1uF 16V K	
C085	NCB11AK-106X	C CAPACITOR	10uF 10V K	
C086	NCB31HK-223X	C CAPACITOR	0.022uF 50V K	
C087	NCB31HK-472X	C CAPACITOR	4700pF 50V K	
C088	NCB31CK-104X	C CAPACITOR	0.1uF 16V K	
C089	NCB31CK-104X	C CAPACITOR	0.1uF 16V K	
C090	NCB31HK-472X	C CAPACITOR	4700pF 50V K	
C091	NCB31CK-104X	C CAPACITOR	0.1uF 16V K	
C092	NCB11CK-225X	C CAPACITOR	2.2uF 16V K	
C093	NCB11CK-225X	C CAPACITOR	2.2uF 16V K	
C094	NCB31CK-104X	C CAPACITOR	0.1uF 16V K	
R002	NRSA63J-0R0X	MG RESISTOR	0Ω 1/16W J	
R004	NRSA63J-101X	MG RESISTOR	100Ω 1/16W J	
R005	NRSA63J-101X	MG RESISTOR	100Ω 1/16W J	
R013	NRSA63J-0R0X	MG RESISTOR	0Ω 1/16W J	
R014	NRSA63J-0R0X	MG RESISTOR	0Ω 1/16W J	
R016	NRSA63J-0R0X	MG RESISTOR	0Ω 1/16W J	
R028	NRSA63J-103X	MG RESISTOR	10kΩ 1/16W J	
R029	NRSA63J-273X	MG RESISTOR	27kΩ 1/16W J	
R030	NRSA63J-103X	MG RESISTOR	10kΩ 1/16W J	
R047	NRSA63J-0R0X	MG RESISTOR	0Ω 1/16W J	
R061	NRSA63J-221X	MG RESISTOR	220Ω 1/16W J	
R062	NRSA63J-221X	MG RESISTOR	220Ω 1/16W J	
R063	NRSA63J-105X	MG RESISTOR	1MΩ 1/16W J	
R064	NRSA63J-104X	MG RESISTOR	100kΩ 1/16W J	
R065	NRSA63J-123X	MG RESISTOR	12kΩ 1/16W J	
R066	NRSA63J-102X	MG RESISTOR	1kΩ 1/16W J	
R067	NRSA63D-683X	MG RESISTOR	68kΩ 1/16W D	
R068	NRSA63J-332X	MG RESISTOR	3.3kΩ 1/16W J	
R069	NRSA63J-302X	MG RESISTOR	3kΩ 1/16W J	
R070	NRSA63J-392X	MG RESISTOR	3.9kΩ 1/16W J	
R071	NRSA63J-225X	MG RESISTOR	2.2MΩ 1/16W J	
R072	NRSA63J-0R0X	MG RESISTOR	0Ω 1/16W J	
R074	NRSA63J-0R0X	MG RESISTOR	0Ω 1/16W J	
R076	NRSA63J-0R0X	MG RESISTOR	0Ω 1/16W J	
R077	NRSA63J-0R0X	MG RESISTOR	0Ω 1/16W J	
L001	NQLE3GK-220X	COIL	22uH K	
L002	NQLE3GK-100X	COIL	10uH K	
L003	NQLE3GK-220X	COIL	22uH K	
CNT1	QGF1201C2-25	CONNECTOR	FFC/FPC (1-25)	
TU001	QAU0430-002	TUNER		

ATSC TUNER MODULE P.W. BOARD ASS'Y (SSD-2111A-M2)

⚠Ref No.	Part No.	Part Name	Description	Local
⚠MD001	SSD-2111A-M2	ATSC TUNER MODULE PWB		

PRINTED WIRING BOARD PARTS LIST [HD-56FN97]

ANALOG P.W. BOARD ASS'Y (SRA-1016A-M2)

⚠Ref No.	Part No.	Part Name	Description	Local
IC101	R2S11004FT	IC		
IC102	R2S11003FT	IC		
IC103	MM1510XN-X	IC		
IC104	MM1510XN-X	IC		
IC105	MM1510XN-X	IC		
IC281	BD3869AF-X	IC		
IC282	RC4558D-X	IC		
IC301	CD4052BNS-X	IC		
IC501	HA17558AF-X	IC		
IC502	AK4554VT-X	IC		
IC551	JCC5067	IC		
IC552	PQ2L3152MS-X	IC		
IC601	NJW1182FP1	IC		
IC602	PQ20WZ11-X	IC		
IC604	MX3000CS-X	IC		
IC605	TDA8928ST/N1	IC		
IC606	M62320FP-X	IC		
IC607	LM393DR-X	IC		
IC608	MM3143DN-X	IC		
IC610	RC4558D-X	IC		
IC902	MM1663DT-X	IC		
Q106	SSM3K17FU-X	MOS FET		
Q107	SSM3K17FU-X	MOS FET		
Q108	2SC3928A/QR/-X	TRANSISTOR		
Q109	2SA1022/BC/-X	TRANSISTOR		
Q110	2SA1022/BC/-X	TRANSISTOR		
Q111	2SA1022/BC/-X	TRANSISTOR		
Q112	2SA1022/BC/-X	TRANSISTOR		
Q113	2SC3928A/QR/-X	TRANSISTOR		
Q302	UN2213-X	DIGI TRANSISTOR		
Q431	UN2226-X	DIGI TRANSISTOR		
Q432	UN2226-X	DIGI TRANSISTOR		
Q433	UN2110-X	DIGI TRANSISTOR		
Q451	UN2226-X	DIGI TRANSISTOR		
Q452	UN2226-X	DIGI TRANSISTOR		
Q453	UN2110-X	DIGI TRANSISTOR		
Q501	2SC3928A/QR/-X	TRANSISTOR		
Q502	2SC3928A/QR/-X	TRANSISTOR		
Q503	2SC3928A/QR/-X	TRANSISTOR		
Q553	2SC3928A/QR/-X	TRANSISTOR		
Q605	UN2212-X	DIGI TRANSISTOR		
Q606	UN2112-X	DIGI TRANSISTOR		
Q607	2SC3928A/QR/-X	TRANSISTOR		
Q614	2SA1530A/QR/-X	TRANSISTOR		
Q615	2SA1530A/QR/-X	TRANSISTOR		
Q616	2SC3928A/QR/-X	TRANSISTOR		
Q617	2SC3928A/QR/-X	TRANSISTOR		
Q901	2SC5881/QR/-X	POW TRANSISTOR		
Q902	2SC5881/QR/-X	POW TRANSISTOR		
D105	1SS355W-X	DIODE		
D110	1SS355W-X	DIODE		
D121	MA8056/M/-X	Z DIODE		
D122	MA8056/M/-X	Z DIODE		
D123	MA8056/M/-X	Z DIODE		
D124	MA8056/M/-X	Z DIODE		
D125	MA8056/M/-X	Z DIODE		
D126	MA8056/M/-X	Z DIODE		
D133	MA8100/M/-X	Z DIODE		
D134	MA8100/M/-X	Z DIODE		
D135	MA8100/M/-X	Z DIODE		
D401	UDZW10B-X	Z DIODE		
D402	UDZW10B-X	Z DIODE		
D403	UDZW10B-X	Z DIODE		
D404	UDZW10B-X	Z DIODE		
D405	UDZW10B-X	Z DIODE		
D406	UDZW10B-X	Z DIODE		
D407	UDZW10B-X	Z DIODE		
D408	UDZW10B-X	Z DIODE		
D409	UDZW10B-X	Z DIODE		
D410	UDZW10B-X	Z DIODE		
D411	UDZW10B-X	Z DIODE		
D412	UDZW10B-X	Z DIODE		
D413	UDZW10B-X	Z DIODE		
D414	UDZW10B-X	Z DIODE		
D415	UDZW10B-X	Z DIODE		
D416	UDZW10B-X	Z DIODE		
D417	UDZW10B-X	Z DIODE		
D418	UDZW10B-X	Z DIODE		
D419	UDZW10B-X	Z DIODE		
D420	UDZW10B-X	Z DIODE		
D421	UDZW10B-X	Z DIODE		
D422	UDZW10B-X	Z DIODE		
D423	UDZW10B-X	Z DIODE		
D424	UDZW10B-X	Z DIODE		
D431	UDZW10B-X	Z DIODE		
D432	UDZW10B-X	Z DIODE		
D451	UDZW10B-X	Z DIODE		
D452	UDZW10B-X	Z DIODE		
D461	UDZW10B-X	Z DIODE		
D462	UDZW10B-X	Z DIODE		
D463	UDZW10B-X	Z DIODE		
D465	UDZW10B-X	Z DIODE		
D466	UDZW10B-X	Z DIODE		
D491	UDZW3.3B-X	Z DIODE		
D492	S9648	PHOTO CONDUCTOR		
D501	1SS355W-X	DIODE		
D502	1SS355W-X	DIODE		
D601	1SS355W-X	DIODE		
D605	1SS355W-X	DIODE		
D606	1SS355W-X	DIODE		
D607	1SS355W-X	DIODE		
D608	1SS355W-X	DIODE		
D610	UDZW20B-X	Z DIODE		
D611	UDZW20B-X	Z DIODE		
D612	UDZW20B-X	Z DIODE		
D613	UDZW20B-X	Z DIODE		
D615	1SS355W-X	DIODE		
D616	UDZW3.3B-X	Z DIODE		
D618	1SS355W-X	DIODE		
D619	UDZW6.2B-X	Z DIODE		
D903	PTZ11B-X	Z DIODE		
D904	PTZ6.8B-X	Z DIODE		
C102	NCB11CK-225X	C CAPACITOR	2.2uF 16V K	
C103	NCB11CK-225X	C CAPACITOR	2.2uF 16V K	
C106	NEHL1EM-475X	E CAPACITOR	4.7uF 25V M	
C107	NCB31CK-104X	C CAPACITOR	0.1uF 16V K	
C108	NEHL1CM-476X	E CAPACITOR	47uF 16V M	
C109	NCB31CK-104X	C CAPACITOR	0.1uF 16V K	
C110	NCB31CK-104X	C CAPACITOR	0.1uF 16V K	
C115	NCB31CK-104X	C CAPACITOR	0.1uF 16V K	
C116	NCB31CK-104X	C CAPACITOR	0.1uF 16V K	
C117	NCB31CK-104X	C CAPACITOR	0.1uF 16V K	
C118	NCB31CK-105X	C CAPACITOR	1uF 16V K	
C119	NCB31CK-105X	C CAPACITOR	1uF 16V K	
C120	NCB31CK-105X	C CAPACITOR	1uF 16V K	
C121	NCB31CK-105X	C CAPACITOR	1uF 16V K	
C122	NCB31CK-104X	C CAPACITOR	0.1uF 16V K	
C123	NCB31CK-104X	C CAPACITOR	0.1uF 16V K	
C124	NCB31CK-105X	C CAPACITOR	1uF 16V K	
C125	NCB31CK-105X	C CAPACITOR	1uF 16V K	
C126	NCB31CK-105X	C CAPACITOR	1uF 16V K	
C127	NCB31CK-105X	C CAPACITOR	1uF 16V K	
C128	NCB31CK-104X	C CAPACITOR	0.1uF 16V K	
C129	NCB31CK-104X	C CAPACITOR	0.1uF 16V K	
C130	NEHL1CM-476X	E CAPACITOR	47uF 16V M	
C131	NCB31CK-104X	C CAPACITOR	0.1uF 16V K	
C132	NCB31CK-105X	C CAPACITOR	1uF 16V K	
C133	NCB31CK-105X	C CAPACITOR	1uF 16V K	
C134	NCB31CK-105X	C CAPACITOR	1uF 16V K	
C136	NCB31CK-104X	C CAPACITOR	0.1uF 16V K	
C138	NCB31CK-103X	C CAPACITOR	0.01uF 16V K	
C139	NCB31CK-105X	C CAPACITOR	1uF 16V K	
C141	NEHL1CM-106X	E CAPACITOR	10uF 16V M	
C142	NCB31CK-104X	C CAPACITOR	0.1uF 16V K	
C143	NCB31CK-104X	C CAPACITOR	0.1uF 16V K	
C144	NCB31CK-105X	C CAPACITOR	1uF 16V K	
C145	NEHL1CM-106X	E CAPACITOR	10uF 16V M	
C146	NEHL1AM-107X	E CAPACITOR	100uF 10V M	
C147	NEHL1CM-106X	E CAPACITOR	10uF 16V M	
C148	NCB31CK-105X	C CAPACITOR	1uF 16V K	
C149	NEHL1CM-106X	E CAPACITOR	10uF 16V M	
C150	NEHL1AM-107X	E CAPACITOR	100uF 10V M	
C151	NEHL1CM-106X	E CAPACITOR	10uF 16V M	
C152	NCB31CK-105X	C CAPACITOR	1uF 16V K	
C153	NEHL1CM-106X	E CAPACITOR	10uF 16V M	
C154	NEHL1AM-107X	E CAPACITOR	100uF 10V M	
C155	NEHL1CM-106X	E CAPACITOR	10uF 16V M	
C156	NCB31CK-103X	C CAPACITOR	0.01uF 16V K	
C157	NCB31CK-103X	C CAPACITOR	0.01uF 16V K	
C158	NCB31CK-103X	C CAPACITOR	0.01uF 16V K	
C159	NCB31HK-104X	C CAPACITOR	0.1uF 50V K	
C160	NCB31HK-104X	C CAPACITOR	0.1uF 50V K	
C161	NCB31CK-103X	C CAPACITOR	0.01uF 16V K	
C162	NCB31HK-104X	C CAPACITOR	0.1uF 50V K	
C163	NCB31CK-104X	C CAPACITOR	0.1uF 16V K	
C164	NCB31CK-104X	C CAPACITOR	0.1uF 16V K	
C165	NCB31CK-104X	C CAPACITOR	0.1uF 16V K	
C166	NCB31HK-103X	C CAPACITOR	0.01uF 50V K	
C167	NCB31CK-104X	C CAPACITOR	0.1uF 16V K	

⚠Ref No.	Part No.	Part Name	Description Local
C168	NCB31CK-104X	C CAPACITOR	0.1uF 16V K
C169	NCB31CK-103X	C CAPACITOR	0.01uF 16V K
C170	NCB31CK-103X	C CAPACITOR	0.01uF 16V K
C171	NCB31CK-103X	C CAPACITOR	0.01uF 16V K
C172	NCB31CK-223X	C CAPACITOR	0.022uF 16V K
C173	NDC31HJ-680X	C CAPACITOR	68pF 50V J
C174	NDC31HJ-331X	C CAPACITOR	330pF 50V J
C175	NCB31CK-103X	C CAPACITOR	0.01uF 16V K
C176	NCB31CK-103X	C CAPACITOR	0.01uF 16V K
C177	NCB31CK-104X	C CAPACITOR	0.1uF 16V K
C178	NCB31CK-105X	C CAPACITOR	1uF 16V K
C179	NEHL1CM-476X	E CAPACITOR	47uF 16V M
C180	NCB31CK-104X	C CAPACITOR	0.1uF 16V K
C181	NCB31CK-103X	C CAPACITOR	0.01uF 16V K
C182	NCB31CK-103X	C CAPACITOR	0.01uF 16V K
C183	NCB31CK-103X	C CAPACITOR	0.01uF 16V K
C184	NCB31CK-104X	C CAPACITOR	0.1uF 16V K
C185	NCB31CK-104X	C CAPACITOR	0.1uF 16V K
C187	NCB31CK-104X	C CAPACITOR	0.1uF 16V K
C189	NEHL1CM-106X	E CAPACITOR	10uF 16V M
C191	NCB31CK-104X	C CAPACITOR	0.1uF 16V K
C192	NCB31CK-104X	C CAPACITOR	0.1uF 16V K
C193	NCB31CK-104X	C CAPACITOR	0.1uF 16V K
C199	NCB31CK-104X	C CAPACITOR	0.1uF 16V K
C200	NCB31CK-104X	C CAPACITOR	0.1uF 16V K
C201	NCB31CK-104X	C CAPACITOR	0.1uF 16V K
C202	NCB31CK-104X	C CAPACITOR	0.1uF 16V K
C203	NCB31CK-104X	C CAPACITOR	0.1uF 16V K
C207	NCB11CK-225X	C CAPACITOR	2.2uF 16V K
C208	NCB11CK-225X	C CAPACITOR	2.2uF 16V K
C211	NDC31HJ-221X	C CAPACITOR	220pF 50V J
C212	NDC31HJ-820X	C CAPACITOR	82pF 50V J
C215	NCB11AK-106X	C CAPACITOR	10uF 10V K
C221	NCB31HK-103X	C CAPACITOR	0.01uF 50V K
C222	NCB31HK-103X	C CAPACITOR	0.01uF 50V K
C223	NDC31HJ-101X	C CAPACITOR	100pF 50V J
C224	NDC31HJ-101X	C CAPACITOR	100pF 50V J
C225	NDC31HJ-100X	C CAPACITOR	10pF 50V J
C226	NDC31HJ-181X	C CAPACITOR	180pF 50V J
C227	NDC31HJ-101X	C CAPACITOR	100pF 50V J
C228	NDC31HJ-101X	C CAPACITOR	100pF 50V J
C229	NDC31HJ-100X	C CAPACITOR	10pF 50V J
C245	NCB31HK-104X	C CAPACITOR	0.1uF 50V K
C246	NCB31CK-104X	C CAPACITOR	0.1uF 16V K
C281	NENA1CM-475X	BP E CAPACITOR	4.7uF 16V M
C282	NENA1CM-475X	BP E CAPACITOR	4.7uF 16V M
C283	NEHL1EM-226X	E CAPACITOR	22uF 25V M
C284	NEHL1CM-107X	E CAPACITOR	100uF 16V M
C285	NEHL1CM-476X	E CAPACITOR	47uF 16V M
C286	NCB31CK-104X	C CAPACITOR	0.1uF 16V K
C287	NENA1CM-475X	BP E CAPACITOR	4.7uF 16V M
C288	NENA1CM-475X	BP E CAPACITOR	4.7uF 16V M
C291	NCB11AK-106X	C CAPACITOR	10uF 10V K
C301	NEHL1CM-476X	E CAPACITOR	47uF 16V M
C303	NENA1CM-475X	BP E CAPACITOR	4.7uF 16V M
C304	NENA1CM-475X	BP E CAPACITOR	4.7uF 16V M
C305	NEHL1CM-107X	E CAPACITOR	100uF 16V M
C306	NEHL1EM-475X	E CAPACITOR	4.7uF 25V M
C307	NEHL1EM-475X	E CAPACITOR	4.7uF 25V M
C401	NCB31HK-103X	C CAPACITOR	0.01uF 50V K
C402	NEHL1CM-106X	E CAPACITOR	10uF 16V M
C403	NEHL1CM-106X	E CAPACITOR	10uF 16V M
C404	NCB21AK-225X	C CAPACITOR	2.2uF 10V K
C405	NCB21AK-225X	C CAPACITOR	2.2uF 10V K
C406	NCB21AK-225X	C CAPACITOR	2.2uF 10V K
C407	NCB21AK-225X	C CAPACITOR	2.2uF 10V K
C408	NCB21AK-225X	C CAPACITOR	2.2uF 10V K
C409	NEHL1CM-106X	E CAPACITOR	10uF 16V M
C410	NCB21AK-225X	C CAPACITOR	2.2uF 10V K
C411	NCB21AK-225X	C CAPACITOR	2.2uF 10V K
C412	NCB21AK-225X	C CAPACITOR	2.2uF 10V K
C413	NCB21AK-225X	C CAPACITOR	2.2uF 10V K
C414	NCB21AK-225X	C CAPACITOR	2.2uF 10V K
C415	NCB31HK-103X	C CAPACITOR	0.01uF 50V K
C416	NEHL1CM-106X	E CAPACITOR	10uF 16V M
C417	NEHL1CM-106X	E CAPACITOR	10uF 16V M
C418	NCB21AK-225X	C CAPACITOR	2.2uF 10V K
C419	NCB21AK-225X	C CAPACITOR	2.2uF 10V K
C420	NCB31HK-102X	C CAPACITOR	1000pF 50V K
C421	NCB21AK-225X	C CAPACITOR	2.2uF 10V K
C422	NCB21AK-225X	C CAPACITOR	2.2uF 10V K
C423	NCB21AK-225X	C CAPACITOR	2.2uF 10V K
C431	NCB11CK-225X	C CAPACITOR	2.2uF 16V K
C432	NCB11CK-225X	C CAPACITOR	2.2uF 16V K
C433	NCB11CK-105X	C CAPACITOR	1uF 16V K
C451	NCB11CK-225X	C CAPACITOR	2.2uF 16V K
C452	NCB11CK-225X	C CAPACITOR	2.2uF 16V K
C453	NCB11CK-105X	C CAPACITOR	1uF 16V K
C461	NDC31HJ-101X	C CAPACITOR	100pF 50V J
C462	NDC31HJ-101X	C CAPACITOR	100pF 50V J
C463	NDC31HJ-101X	C CAPACITOR	100pF 50V J
C464	NCB21AK-225X	C CAPACITOR	2.2uF 10V K
C465	NCB21AK-225X	C CAPACITOR	2.2uF 10V K
C466	NCB21AK-225X	C CAPACITOR	2.2uF 10V K
C468	NDC31HJ-101X	C CAPACITOR	100pF 50V J
C469	NDC31HJ-101X	C CAPACITOR	100pF 50V J
C491	NEHL1CM-106X	E CAPACITOR	10uF 16V M
C492	NCB31CK-104X	C CAPACITOR	0.1uF 16V K
C493	NEHL1CM-107X	E CAPACITOR	100uF 16V M
C494	NCB31HK-102X	C CAPACITOR	1000pF 50V K
C501	NCB31CK-223X	C CAPACITOR	0.022uF 16V K
C502	NCB31CK-223X	C CAPACITOR	0.022uF 16V K
C503	NCB31HK-222X	C CAPACITOR	2200pF 50V K
C504	NCB31HK-222X	C CAPACITOR	2200pF 50V K
C505	NCB31HK-822X	C CAPACITOR	8200pF 50V K
C506	NCB31HK-822X	C CAPACITOR	8200pF 50V K
C507	NEHL1AM-107X	E CAPACITOR	100uF 10V M
C508	NENA1HM-105X	BP E CAPACITOR	1uF 50V M
C509	NENA1HM-105X	BP E CAPACITOR	1uF 50V M
C510	NEHL1CM-476X	E CAPACITOR	47uF 16V M
C511	NENA1CM-475X	BP E CAPACITOR	4.7uF 16V M
C512	NENA1CM-475X	BP E CAPACITOR	4.7uF 16V M
C513	NENA1CM-475X	BP E CAPACITOR	4.7uF 16V M
C514	NENA1CM-475X	BP E CAPACITOR	4.7uF 16V M
C515	NCB31HK-102X	C CAPACITOR	1000pF 50V K
C516	NCB31HK-102X	C CAPACITOR	1000pF 50V K
C517	NEHL1EM-475X	E CAPACITOR	4.7uF 25V M
C518	NCB31CK-104X	C CAPACITOR	0.1uF 16V K
C519	NCB31CK-104X	C CAPACITOR	0.1uF 16V K
C520	NEHL1CM-106X	E CAPACITOR	10uF 16V M
C531	NCB31HK-102X	C CAPACITOR	1000pF 50V K
C532	NCB31HK-102X	C CAPACITOR	1000pF 50V K
C551	NCB31HK-102X	C CAPACITOR	1000pF 50V K
C552	NCB31HK-102X	C CAPACITOR	1000pF 50V K
C555	NEHL1CM-106X	E CAPACITOR	10uF 16V M
C557	NCB31CK-104X	C CAPACITOR	0.1uF 16V K
C558	NCB30JK-225X	C CAPACITOR	2.2uF 6.3V K
C559	NEHL0JM-226X	E CAPACITOR	22uF 6.3V M
C560	NCB30JK-225X	C CAPACITOR	2.2uF 6.3V K
C561	NEHL0JM-226X	E CAPACITOR	22uF 6.3V M
C562	NEHL0JM-226X	E CAPACITOR	22uF 6.3V M
C563	NCB31HK-103X	C CAPACITOR	0.01uF 50V K
C564	NCB31HK-103X	C CAPACITOR	0.01uF 50V K
C565	NCB31HK-104X	C CAPACITOR	0.1uF 50V K
C566	NCB31HK-104X	C CAPACITOR	0.1uF 50V K
C567	NCB31HK-103X	C CAPACITOR	0.01uF 50V K
C568	NCB31HK-103X	C CAPACITOR	0.01uF 50V K
C569	NCB31HK-103X	C CAPACITOR	0.01uF 50V K
C571	NEHL0JM-226X	E CAPACITOR	22uF 6.3V M
C572	NCB31CK-105X	C CAPACITOR	1uF 16V K
C573	NEHL0JM-226X	E CAPACITOR	22uF 6.3V M
C574	NCB31HK-103X	C CAPACITOR	0.01uF 50V K
C575	NCB31HK-103X	C CAPACITOR	0.01uF 50V K
C601	NCB31HK-103X	C CAPACITOR	0.01uF 50V K
C602	NEHL1EM-336X	E CAPACITOR	33uF 25V M
C603	NEHL1EM-336X	E CAPACITOR	33uF 25V M
C604	NCB31EK-104X	C CAPACITOR	0.1uF 25V K
C605	NCB31HK-103X	C CAPACITOR	0.01uF 50V K
C606	NCB31HK-104X	C CAPACITOR	0.1uF 50V K
C607	QETM1EM-477	E CAPACITOR	470uF 25V M
C616	NEHL1EM-475X	E CAPACITOR	4.7uF 25V M
C617	NEHL1EM-475X	E CAPACITOR	4.7uF 25V M
C623	NCB21CK-184X	C CAPACITOR	0.18uF 16V K
C624	NCB31HK-222X	C CAPACITOR	2200pF 50V K
C625	NCB31HK-183X	C CAPACITOR	0.018uF 50V K
C628	NCB31HK-123X	C CAPACITOR	0.012uF 50V K
C629	NCB31HK-222X	C CAPACITOR	2200pF 50V K
C630	NCB21CK-184X	C CAPACITOR	0.18uF 16V K
C632	NCB31HK-104X	C CAPACITOR	0.1uF 50V K
C633	NCB31HK-822X	C CAPACITOR	8200pF 50V K
C634	NCB31HK-822X	C CAPACITOR	8200pF 50V K
C635	NCB31HK-681X	C CAPACITOR	680pF 50V K
C636	NCB31HK-681X	C CAPACITOR	680pF 50V K
C638	NCB31EK-223X	C CAPACITOR	0.022uF 25V K
C639	NCB31HK-104X	C CAPACITOR	0.1uF 50V K
C643	NCB31HK-104X	C CAPACITOR	0.1uF 50V K
C644	NEHL1EM-475X	E CAPACITOR	4.7uF 25V M
C647	NCB31CK-105X	C CAPACITOR	1uF 16V K
C648	NCB31CK-105X	C CAPACITOR	1uF 16V K
C649	NCB31CK-105X	C CAPACITOR	1uF 16V K
C650	NCB31CK-105X	C CAPACITOR	1uF 16V K
C651	NCB31CK-105X	C CAPACITOR	1uF 16V K
C653	NCB31EK-223X	C CAPACITOR	0.022uF 25V K
C654	NCB31CK-473X	C CAPACITOR	0.047uF 16V K
C655	NEHL1CM-106X	E CAPACITOR	10uF 16V M
C659	NEHL1CM-106X	E CAPACITOR	10uF 16V M
C660	NCB31CK-105X	C CAPACITOR	1uF 16V K
C661	NCB31CK-105X	C CAPACITOR	1uF 16V K
C662	NCB21AK-225X	C CAPACITOR	2.2uF 10V K
C663	NCB31CK-105X	C CAPACITOR	1uF 16V K

⚠Ref No.	Part No.	Part Name	Description Local
C664	NCB31CK-105X	C CAPACITOR	1uF 16V K
C665	NCB31CK-105X	C CAPACITOR	1uF 16V K
C666	NEHL1CM-106X	E CAPACITOR	10uF 16V M
C667	NCB31CK-105X	C CAPACITOR	1uF 16V K
C668	NCB31CK-105X	C CAPACITOR	1uF 16V K
C669	NCB31CK-105X	C CAPACITOR	1uF 16V K
C670	NCB31CK-105X	C CAPACITOR	1uF 16V K
C671	NCB31CK-105X	C CAPACITOR	1uF 16V K
C672	NCB31AK-474X	C CAPACITOR	0.47uF 10V K
C675	NCB30JK-225X	C CAPACITOR	2.2uF 6.3V K
C676	NCB30JK-225X	C CAPACITOR	2.2uF 6.3V K
C677	NDC31HJ-330X	C CAPACITOR	33pF 50V J
C678	NDC31HJ-330X	C CAPACITOR	33pF 50V J
C679	NDC31HJ-101X	C CAPACITOR	100pF 50V J
C680	NDC31HJ-101X	C CAPACITOR	100pF 50V J
C681	NCB31CK-104X	C CAPACITOR	0.1uF 16V K
C682	NCB31CK-104X	C CAPACITOR	0.1uF 16V K
C683	NCB31HK-332X	C CAPACITOR	3300pF 50V K
C684	NCB31HK-332X	C CAPACITOR	3300pF 50V K
C685	NCB31HK-222X	C CAPACITOR	2200pF 50V K
C686	NCB31HK-222X	C CAPACITOR	2200pF 50V K
C687	NCB31HK-472X	C CAPACITOR	4700pF 50V K
C688	NCB31HK-472X	C CAPACITOR	4700pF 50V K
C689	NCB31HK-104X	C CAPACITOR	0.1uF 50V K
C690	NCB31HK-104X	C CAPACITOR	0.1uF 50V K
C691	NEHL1EM-226X	E CAPACITOR	22uF 25V M
C692	NEHL1EM-226X	E CAPACITOR	22uF 25V M
C693	NCB11EK-105X	C CAPACITOR	1uF 25V K
C694	NCB11EK-105X	C CAPACITOR	1uF 25V K
C697	NCB31HK-104X	C CAPACITOR	0.1uF 50V K
C698	NCB31HK-104X	C CAPACITOR	0.1uF 50V K
C699	QETM1HM-226	E CAPACITOR	22uF 50V M
C700	QETM1HM-226	E CAPACITOR	22uF 50V M
C701	NCB31HK-104X	C CAPACITOR	0.1uF 50V K
C702	QETM1EM-477	E CAPACITOR	470uF 25V M
C704	NCB31HK-104X	C CAPACITOR	0.1uF 50V K
C705	QETM1EM-477	E CAPACITOR	470uF 25V M
C707	NCB31HK-104X	C CAPACITOR	0.1uF 50V K
C708	NCB31HK-561X	C CAPACITOR	560pF 50V K
C709	NCB31HK-561X	C CAPACITOR	560pF 50V K
C711	NCB31HK-561X	C CAPACITOR	560pF 50V K
C712	NCB31HK-561X	C CAPACITOR	560pF 50V K
C713	QFVF1HJ-224Z	MF CAPACITOR	0.22uF 50V J
C716	NEHL1CM-476X	E CAPACITOR	47uF 16V M
C717	NCB31CK-105X	C CAPACITOR	1uF 16V K
C719	QFVF1HJ-224Z	MF CAPACITOR	0.22uF 50V J
C720	QFVF1HJ-224Z	MF CAPACITOR	0.22uF 50V J
C721	QFVF1HJ-224Z	MF CAPACITOR	0.22uF 50V J
C722	NCB31HK-153X	C CAPACITOR	0.015uF 50V K
C723	NCB31HK-153X	C CAPACITOR	0.015uF 50V K
C724	NCB31HK-104X	C CAPACITOR	0.1uF 50V K
C727	NCB31HK-104X	C CAPACITOR	0.1uF 50V K
C728	QETM1EM-477	E CAPACITOR	470uF 25V M
C729	NEHL0JM-226X	E CAPACITOR	22uF 6.3V M
C730	NEHL1CM-106X	E CAPACITOR	10uF 16V M
C731	NCB31HK-104X	C CAPACITOR	0.1uF 50V K
C732	NCB31CK-105X	C CAPACITOR	1uF 16V K
C733	NCB31HK-153X	C CAPACITOR	0.015uF 50V K
C734	NENA1CM-475X	BP E CAPACITOR	4.7uF 16V M
C735	NDC31HJ-330X	C CAPACITOR	33pF 50V J
C736	NDC31HJ-330X	C CAPACITOR	33pF 50V J
C737	NEHL1CM-106X	E CAPACITOR	10uF 16V M
C738	NCB31HK-104X	C CAPACITOR	0.1uF 50V K
C739	NENA1CM-475X	BP E CAPACITOR	4.7uF 16V M
C740	NEHL1CM-476X	E CAPACITOR	47uF 16V M
C741	NEHL1CM-476X	E CAPACITOR	47uF 16V M
C742	NEHL1HM-105X	E CAPACITOR	1uF 50V M
C743	NEHL1HM-105X	E CAPACITOR	1uF 50V M
C744	NDC31HJ-100X	C CAPACITOR	10pF 50V J
C745	NDC31HJ-100X	C CAPACITOR	10pF 50V J
C904	NCB11AK-106X	C CAPACITOR	10uF 10V K
C905	NEHM1CM-476X	E CAPACITOR	47uF 16V M
C911	NEX51CM-335X	E CAPACITOR	3.3uF 16V M
C912	NEHL1CM-476X	E CAPACITOR	47uF 16V M
C913	NEX51CM-335X	E CAPACITOR	3.3uF 16V M
C914	NEX50JM-156X	E CAPACITOR	15uF 6.3V M
C915	NEHL1CM-476X	E CAPACITOR	47uF 16V M
C916	NEX50JM-156X	E CAPACITOR	15uF 6.3V M
C919	NEX51CM-335X	E CAPACITOR	3.3uF 16V M
C920	NEX50JM-156X	E CAPACITOR	15uF 6.3V M
R126	NRSA63J-0R0X	MG RESISTOR	0Ω 1/16W J
R127	NRSA63J-0R0X	MG RESISTOR	0Ω 1/16W J
R128	NRSA63J-0R0X	MG RESISTOR	0Ω 1/16W J
R136	NRSA63J-0R0X	MG RESISTOR	0Ω 1/16W J
R137	NRSA63J-0R0X	MG RESISTOR	0Ω 1/16W J
R140	NRSA63J-682X	MG RESISTOR	6.8kΩ 1/16W J
R141	NRSA63J-682X	MG RESISTOR	6.8kΩ 1/16W J
R142	NRSA63J-333X	MG RESISTOR	33kΩ 1/16W J
R143	NRSA63J-682X	MG RESISTOR	6.8kΩ 1/16W J

⚠Ref No.	Part No.	Part Name	Description Local
R144	NRSA63J-682X	MG RESISTOR	6.8kΩ 1/16W J
R145	NRSA63J-333X	MG RESISTOR	33kΩ 1/16W J
R146	NRSA63J-682X	MG RESISTOR	6.8kΩ 1/16W J
R147	NRSA63J-682X	MG RESISTOR	6.8kΩ 1/16W J
R148	NRSA63J-0R0X	MG RESISTOR	0Ω 1/16W J
R149	NRSA63J-0R0X	MG RESISTOR	0Ω 1/16W J
R150	NRSA63J-333X	MG RESISTOR	33kΩ 1/16W J
R151	NRSA63J-682X	MG RESISTOR	6.8kΩ 1/16W J
R152	NRSA63J-682X	MG RESISTOR	6.8kΩ 1/16W J
R153	NRSA63J-682X	MG RESISTOR	6.8kΩ 1/16W J
R154	NRSA63J-682X	MG RESISTOR	6.8kΩ 1/16W J
R157	NRSA63J-333X	MG RESISTOR	33kΩ 1/16W J
R158	NRSA63J-682X	MG RESISTOR	6.8kΩ 1/16W J
R159	NRSA63J-682X	MG RESISTOR	6.8kΩ 1/16W J
R160	NRSA63J-682X	MG RESISTOR	6.8kΩ 1/16W J
R161	NRSA63J-682X	MG RESISTOR	6.8kΩ 1/16W J
R164	NRSA63J-224X	MG RESISTOR	220kΩ 1/16W J
R165	NRSA63J-224X	MG RESISTOR	220kΩ 1/16W J
R166	NRSA63J-224X	MG RESISTOR	220kΩ 1/16W J
R167	NRSA63J-224X	MG RESISTOR	220kΩ 1/16W J
R168	NRSA63J-101X	MG RESISTOR	100Ω 1/16W J
R169	NRSA63J-101X	MG RESISTOR	100Ω 1/16W J
R170	NRSA63J-0R0X	MG RESISTOR	0Ω 1/16W J
R171	NRSA63J-0R0X	MG RESISTOR	0Ω 1/16W J
R172	NRSA63J-0R0X	MG RESISTOR	0Ω 1/16W J
R174	NRSA63J-0R0X	MG RESISTOR	0Ω 1/16W J
R175	NRSA63J-0R0X	MG RESISTOR	0Ω 1/16W J
R176	NRSA63J-0R0X	MG RESISTOR	0Ω 1/16W J
R178	NRSA63J-0R0X	MG RESISTOR	0Ω 1/16W J
R179	NRSA63J-0R0X	MG RESISTOR	0Ω 1/16W J
R180	NRSA63J-0R0X	MG RESISTOR	0Ω 1/16W J
R181	NRSA63J-224X	MG RESISTOR	220kΩ 1/16W J
R183	NRSA63J-0R0X	MG RESISTOR	0Ω 1/16W J
R184	NRSA63J-224X	MG RESISTOR	220kΩ 1/16W J
R185	NRSA63J-0R0X	MG RESISTOR	0Ω 1/16W J
R187	NRSA63J-0R0X	MG RESISTOR	0Ω 1/16W J
R188	NRSA63J-103X	MG RESISTOR	10kΩ 1/16W J
R189	NRSA63J-0R0X	MG RESISTOR	0Ω 1/16W J
R194	NRSA63J-0R0X	MG RESISTOR	0Ω 1/16W J
R204	NRSA63J-0R0X	MG RESISTOR	0Ω 1/16W J
R205	NRSA63J-0R0X	MG RESISTOR	0Ω 1/16W J
R206	NRSA63J-562X	MG RESISTOR	5.6kΩ 1/16W J
R207	NRSA63J-562X	MG RESISTOR	5.6kΩ 1/16W J
R208	NRSA63J-0R0X	MG RESISTOR	0Ω 1/16W J
R209	NRSA63J-0R0X	MG RESISTOR	0Ω 1/16W J
R210	NRSA63J-0R0X	MG RESISTOR	0Ω 1/16W J
R219	NRSA63J-101X	MG RESISTOR	100Ω 1/16W J
R220	NRSA63J-101X	MG RESISTOR	100Ω 1/16W J
R221	NRSA63J-0R0X	MG RESISTOR	0Ω 1/16W J
R223	NRSA63J-223X	MG RESISTOR	22kΩ 1/16W J
R224	NRSA63J-223X	MG RESISTOR	22kΩ 1/16W J
R225	NRSA63J-103X	MG RESISTOR	10kΩ 1/16W J
R228	NRSA63J-0R0X	MG RESISTOR	0Ω 1/16W J
R229	NRSA63J-0R0X	MG RESISTOR	0Ω 1/16W J
R230	NRSA63J-0R0X	MG RESISTOR	0Ω 1/16W J
R231	NRSA63J-0R0X	MG RESISTOR	0Ω 1/16W J
R232	NRSA63J-0R0X	MG RESISTOR	0Ω 1/16W J
R233	NRSA63J-0R0X	MG RESISTOR	0Ω 1/16W J
R234	NRSA63J-0R0X	MG RESISTOR	0Ω 1/16W J
R235	NRSA63J-0R0X	MG RESISTOR	0Ω 1/16W J
R241	NRSA63J-0R0X	MG RESISTOR	0Ω 1/16W J
R243	NRSA63J-0R0X	MG RESISTOR	0Ω 1/16W J
R245	NRSA63J-0R0X	MG RESISTOR	0Ω 1/16W J
R246	NRSA63J-0R0X	MG RESISTOR	0Ω 1/16W J
R247	NRSA63J-0R0X	MG RESISTOR	0Ω 1/16W J
R249	NRSA63J-0R0X	MG RESISTOR	0Ω 1/16W J
R251	NRSA63J-0R0X	MG RESISTOR	0Ω 1/16W J
R253	NRSA63J-0R0X	MG RESISTOR	0Ω 1/16W J
R255	NRSA63J-0R0X	MG RESISTOR	0Ω 1/16W J
R257	NRSA63J-0R0X	MG RESISTOR	0Ω 1/16W J
R259	NRSA63J-0R0X	MG RESISTOR	0Ω 1/16W J
R260	NRSA63J-101X	MG RESISTOR	100Ω 1/16W J
R261	NRSA63J-272X	MG RESISTOR	2.7kΩ 1/16W J
R262	NRSA63J-101X	MG RESISTOR	100Ω 1/16W J
R263	NRSA63J-331X	MG RESISTOR	330Ω 1/16W J
R264	NRSA63J-101X	MG RESISTOR	100Ω 1/16W J
R265	NRSA63J-331X	MG RESISTOR	330Ω 1/16W J
R266	NRSA63J-101X	MG RESISTOR	100Ω 1/16W J
R267	NRSA63J-331X	MG RESISTOR	330Ω 1/16W J
R281	NRSA63J-0R0X	MG RESISTOR	0Ω 1/16W J
R284	NRSA63J-472X	MG RESISTOR	4.7kΩ 1/16W J
R285	NRSA63J-472X	MG RESISTOR	4.7kΩ 1/16W J
R286	NRSA63J-0R0X	MG RESISTOR	0Ω 1/16W J
R287	NRSA63J-153X	MG RESISTOR	15kΩ 1/16W J
R288	NRSA63J-153X	MG RESISTOR	15kΩ 1/16W J
R289	NRSA63J-103X	MG RESISTOR	10kΩ 1/16W J
R290	NRSA63J-153X	MG RESISTOR	15kΩ 1/16W J
R291	NRSA63J-103X	MG RESISTOR	10kΩ 1/16W J
R292	NRSA63J-153X	MG RESISTOR	15kΩ 1/16W J
R299	NRSA63J-0R0X	MG RESISTOR	0Ω 1/16W J

⚠Ref No.	Part No.	Part Name	Description	Local
R306	NRSA63J-332X	MG RESISTOR	3.3kΩ 1/16W J	
R307	NRSA63J-332X	MG RESISTOR	3.3kΩ 1/16W J	
R308	NRSA63J-0R0X	MG RESISTOR	0Ω 1/16W J	
R309	NRSA63J-104X	MG RESISTOR	100kΩ 1/16W J	
R310	NRSA63J-104X	MG RESISTOR	100kΩ 1/16W J	
R311	NRSA63J-104X	MG RESISTOR	100kΩ 1/16W J	
R312	NRSA63J-104X	MG RESISTOR	100kΩ 1/16W J	
R313	NRSA63J-104X	MG RESISTOR	100kΩ 1/16W J	
R314	NRSA63J-223X	MG RESISTOR	22kΩ 1/16W J	
R315	NRSA63J-682X	MG RESISTOR	6.8kΩ 1/16W J	
R316	NRSA63J-104X	MG RESISTOR	100kΩ 1/16W J	
R317	NRSA63J-104X	MG RESISTOR	100kΩ 1/16W J	
R318	NRSA63J-0R0X	MG RESISTOR	0Ω 1/16W J	
R319	NRSA63J-0R0X	MG RESISTOR	0Ω 1/16W J	
R395	NRSA63J-0R0X	MG RESISTOR	0Ω 1/16W J	
R401	NRSA63J-750X	MG RESISTOR	75Ω 1/16W J	
R402	NRSA63J-750X	MG RESISTOR	75Ω 1/16W J	
R403	NRSA63J-750X	MG RESISTOR	75Ω 1/16W J	
R404	NRSA63J-224X	MG RESISTOR	220kΩ 1/16W J	
R405	NRSA63J-224X	MG RESISTOR	220kΩ 1/16W J	
R407	NRSA63J-750X	MG RESISTOR	75Ω 1/16W J	
R408	NRSA63J-750X	MG RESISTOR	75Ω 1/16W J	
R409	NRSA63J-750X	MG RESISTOR	75Ω 1/16W J	
R410	NRSA63J-750X	MG RESISTOR	75Ω 1/16W J	
R411	NRSA63J-224X	MG RESISTOR	220kΩ 1/16W J	
R412	NRSA63J-224X	MG RESISTOR	220kΩ 1/16W J	
R413	NRSA63J-750X	MG RESISTOR	75Ω 1/16W J	
R414	NRSA63J-750X	MG RESISTOR	75Ω 1/16W J	
R415	NRSA63J-750X	MG RESISTOR	75Ω 1/16W J	
R416	NRSA63J-750X	MG RESISTOR	75Ω 1/16W J	
R417	NRSA63J-750X	MG RESISTOR	75Ω 1/16W J	
R418	NRSA63J-750X	MG RESISTOR	75Ω 1/16W J	
R419	NRSA63J-224X	MG RESISTOR	220kΩ 1/16W J	
R420	NRSA63J-224X	MG RESISTOR	220kΩ 1/16W J	
R421	NRSA63J-224X	MG RESISTOR	220kΩ 1/16W J	
R422	NRSA63J-224X	MG RESISTOR	220kΩ 1/16W J	
R423	NRSA63J-224X	MG RESISTOR	220kΩ 1/16W J	
R431	NRSA63J-750X	MG RESISTOR	75Ω 1/16W J	
R433	NRSA63J-750X	MG RESISTOR	75Ω 1/16W J	
R434	NRSA63J-222X	MG RESISTOR	2.2kΩ 1/16W J	
R435	NRSA63J-750X	MG RESISTOR	75Ω 1/16W J	
R436	NRSA63J-222X	MG RESISTOR	2.2kΩ 1/16W J	
R437	NRSA63J-391X	MG RESISTOR	390Ω 1/16W J	
R438	NRSA63J-223X	MG RESISTOR	22kΩ 1/16W J	
R439	NRSA63J-471X	MG RESISTOR	470Ω 1/16W J	
R440	NRSA63J-391X	MG RESISTOR	390Ω 1/16W J	
R441	NRSA63J-223X	MG RESISTOR	22kΩ 1/16W J	
R442	NRSA63J-471X	MG RESISTOR	470Ω 1/16W J	
R443	NRSA63J-102X	MG RESISTOR	1kΩ 1/16W J	
R444	NRSA63J-393X	MG RESISTOR	39kΩ 1/16W J	
R451	NRSA63J-221X	MG RESISTOR	220Ω 1/16W J	
R452	NRSA63J-823X	MG RESISTOR	82kΩ 1/16W J	
R453	NRSA63J-471X	MG RESISTOR	470Ω 1/16W J	
R454	NRSA63J-221X	MG RESISTOR	220Ω 1/16W J	
R455	NRSA63J-823X	MG RESISTOR	82kΩ 1/16W J	
R456	NRSA63J-471X	MG RESISTOR	470Ω 1/16W J	
R457	NRSA63J-102X	MG RESISTOR	1kΩ 1/16W J	
R458	NRSA63J-393X	MG RESISTOR	39kΩ 1/16W J	
R461	NRSA63J-750X	MG RESISTOR	75Ω 1/16W J	
R462	NRSA63J-0R0X	MG RESISTOR	0Ω 1/16W J	
R463	NRSA63J-0R0X	MG RESISTOR	0Ω 1/16W J	
R464	NRSA63J-750X	MG RESISTOR	75Ω 1/16W J	
R465	NRSA63J-0R0X	MG RESISTOR	0Ω 1/16W J	
R466	NRSA63J-0R0X	MG RESISTOR	0Ω 1/16W J	
R467	NRSA63J-750X	MG RESISTOR	75Ω 1/16W J	
R468	NRSA63J-0R0X	MG RESISTOR	0Ω 1/16W J	
R469	NRSA63J-0R0X	MG RESISTOR	0Ω 1/16W J	
R470	NRSA63J-0R0X	MG RESISTOR	0Ω 1/16W J	
R472	NRSA63J-0R0X	MG RESISTOR	0Ω 1/16W J	
R474	NRSA63J-0R0X	MG RESISTOR	0Ω 1/16W J	
R475	NRSA63J-102X	MG RESISTOR	1kΩ 1/16W J	
R476	NRSA63J-102X	MG RESISTOR	1kΩ 1/16W J	
R491	NRSA63J-105X	MG RESISTOR	1MΩ 1/16W J	
R501	NRSA63J-221X	MG RESISTOR	220Ω 1/16W J	
R502	NRSA63J-221X	MG RESISTOR	220Ω 1/16W J	
R503	NRSA63J-472X	MG RESISTOR	4.7kΩ 1/16W J	
R504	NRSA63J-332X	MG RESISTOR	3.3kΩ 1/16W J	
R505	NRSA63J-332X	MG RESISTOR	3.3kΩ 1/16W J	
R506	NRSA63J-472X	MG RESISTOR	4.7kΩ 1/16W J	
R507	NRSA63J-332X	MG RESISTOR	3.3kΩ 1/16W J	
R508	NRSA63J-102X	MG RESISTOR	1kΩ 1/16W J	
R509	NRSA63J-102X	MG RESISTOR	1kΩ 1/16W J	
R510	NRSA63J-332X	MG RESISTOR	3.3kΩ 1/16W J	
R511	NRSA63J-103X	MG RESISTOR	10kΩ 1/16W J	
R512	NRSA63J-333X	MG RESISTOR	33kΩ 1/16W J	
R513	NRSA63J-333X	MG RESISTOR	33kΩ 1/16W J	
R514	NRSA63J-103X	MG RESISTOR	10kΩ 1/16W J	
R515	NRSA63J-102X	MG RESISTOR	1kΩ 1/16W J	
R516	NRSA63J-102X	MG RESISTOR	1kΩ 1/16W J	
R517	NRSA63J-333X	MG RESISTOR	33kΩ 1/16W J	
R518	NRSA63J-333X	MG RESISTOR	33kΩ 1/16W J	
R519	NRSA63J-333X	MG RESISTOR	33kΩ 1/16W J	
R520	NRSA63J-333X	MG RESISTOR	33kΩ 1/16W J	
R521	NRSA63J-332X	MG RESISTOR	3.3kΩ 1/16W J	
R522	NRSA63J-332X	MG RESISTOR	3.3kΩ 1/16W J	
R523	NRSA63J-102X	MG RESISTOR	1kΩ 1/16W J	
R524	NRSA63J-102X	MG RESISTOR	1kΩ 1/16W J	
R525	NRSA63J-102X	MG RESISTOR	1kΩ 1/16W J	
R526	NRSA63J-102X	MG RESISTOR	1kΩ 1/16W J	
R527	NRSA63J-471X	MG RESISTOR	470Ω 1/16W J	
R528	NRSA63J-471X	MG RESISTOR	470Ω 1/16W J	
R529	NRSA63J-101X	MG RESISTOR	100Ω 1/16W J	
R530	NRSA63J-0R0X	MG RESISTOR	0Ω 1/16W J	
R531	NRSA63J-332X	MG RESISTOR	3.3kΩ 1/16W J	
R532	NRSA63J-103X	MG RESISTOR	10kΩ 1/16W J	
R533	NRSA63J-103X	MG RESISTOR	10kΩ 1/16W J	
R534	NRSA63J-101X	MG RESISTOR	100Ω 1/16W J	
R535	NRSA63J-101X	MG RESISTOR	100Ω 1/16W J	
R553	NRSA63J-103X	MG RESISTOR	10kΩ 1/16W J	
R554	NRSA63J-0R0X	MG RESISTOR	0Ω 1/16W J	
R555	NRSA63J-0R0X	MG RESISTOR	0Ω 1/16W J	
R556	NRSA63J-103X	MG RESISTOR	10kΩ 1/16W J	
R557	NRSA63J-103X	MG RESISTOR	10kΩ 1/16W J	
R560	NRSA63J-682X	MG RESISTOR	6.8kΩ 1/16W J	
R561	NRSA63J-221X	MG RESISTOR	220Ω 1/16W J	
R562	NRSA63J-221X	MG RESISTOR	220Ω 1/16W J	
R563	NRSA63J-221X	MG RESISTOR	220Ω 1/16W J	
R564	NRSA63J-221X	MG RESISTOR	220Ω 1/16W J	
R565	NRSA63J-0R0X	MG RESISTOR	0Ω 1/16W J	
R566	NRSA63J-101X	MG RESISTOR	100Ω 1/16W J	
R567	NRSA63J-101X	MG RESISTOR	100Ω 1/16W J	
R568	NRSA63J-103X	MG RESISTOR	10kΩ 1/16W J	
R569	NRSA63J-103X	MG RESISTOR	10kΩ 1/16W J	
R570	NRSA63J-101X	MG RESISTOR	100Ω 1/16W J	
R571	NRSA63J-105X	MG RESISTOR	1MΩ 1/16W J	
R572	NRSA63J-4R7X	MG RESISTOR	4.7Ω 1/16W J	
R573	NRSA63J-103X	MG RESISTOR	10kΩ 1/16W J	
R574	NRSA63J-0R0X	MG RESISTOR	0Ω 1/16W J	
R575	NRSA63J-103X	MG RESISTOR	10kΩ 1/16W J	
R576	NRSA63J-103X	MG RESISTOR	10kΩ 1/16W J	
R577	NRSA63J-103X	MG RESISTOR	10kΩ 1/16W J	
R578	NRSA63J-103X	MG RESISTOR	10kΩ 1/16W J	
R584	NRSA63J-103X	MG RESISTOR	10kΩ 1/16W J	
R585	NRSA63J-103X	MG RESISTOR	10kΩ 1/16W J	
R588	NRSA63J-0R0X	MG RESISTOR	0Ω 1/16W J	
R589	NRSA63J-0R0X	MG RESISTOR	0Ω 1/16W J	
R590	NRSA63J-0R0X	MG RESISTOR	0Ω 1/16W J	
R591	NRSA63J-0R0X	MG RESISTOR	0Ω 1/16W J	
R592	NRSA63J-0R0X	MG RESISTOR	0Ω 1/16W J	
R593	NRSA63J-0R0X	MG RESISTOR	0Ω 1/16W J	
R594	NRSA63J-0R0X	MG RESISTOR	0Ω 1/16W J	
R597	NRSA63J-331X	MG RESISTOR	330Ω 1/16W J	
R598	NRSA63J-330X	MG RESISTOR	33Ω 1/16W J	
R599	NRSA63J-471X	MG RESISTOR	470Ω 1/16W J	
R601	NRSA63J-0R0X	MG RESISTOR	0Ω 1/16W J	
R602	NRSA63J-0R0X	MG RESISTOR	0Ω 1/16W J	
R603	NRSA63J-562X	MG RESISTOR	5.6kΩ 1/16W J	
R604	NRSA63J-182X	MG RESISTOR	1.8kΩ 1/16W J	
R605	NRSA63J-183X	MG RESISTOR	18kΩ 1/16W J	
R606	NRSA63J-562X	MG RESISTOR	5.6kΩ 1/16W J	
R607	NRSA63J-473X	MG RESISTOR	47kΩ 1/16W J	
R608	NRSA63J-222X	MG RESISTOR	2.2kΩ 1/16W J	
R620	NRSA63J-0R0X	MG RESISTOR	0Ω 1/16W J	
R623	NRSA63J-0R0X	MG RESISTOR	0Ω 1/16W J	
R625	NRSA63J-101X	MG RESISTOR	100Ω 1/16W J	
R628	NRSA63J-101X	MG RESISTOR	100Ω 1/16W J	
R634	NRSA63J-153X	MG RESISTOR	15kΩ 1/16W J	
R635	NRSA63J-563X	MG RESISTOR	56kΩ 1/16W J	
R636	NRSA63J-473X	MG RESISTOR	47kΩ 1/16W J	
R638	NRSA63J-183X	MG RESISTOR	18kΩ 1/16W J	
R641	NRSA63J-332X	MG RESISTOR	3.3kΩ 1/16W J	
R642	NRSA63J-163X	MG RESISTOR	16kΩ 1/16W J	
R644	NRSA63J-562X	MG RESISTOR	5.6kΩ 1/16W J	
R645	NRSA63J-222X	MG RESISTOR	2.2kΩ 1/16W J	
R647	NRSA63J-183X	MG RESISTOR	18kΩ 1/16W J	
R649	NRSA63J-683X	MG RESISTOR	68kΩ 1/16W J	
R650	NRSA63J-333X	MG RESISTOR	33kΩ 1/16W J	
R651	NRSA63J-101X	MG RESISTOR	100Ω 1/16W J	
R652	NRSA63J-101X	MG RESISTOR	100Ω 1/16W J	
R653	NRSA63J-562X	MG RESISTOR	5.6kΩ 1/16W J	
R661	NRSA63J-103X	MG RESISTOR	10kΩ 1/16W J	
R662	NRSA63J-332X	MG RESISTOR	3.3kΩ 1/16W J	
R663	NRSA63J-332X	MG RESISTOR	3.3kΩ 1/16W J	
R666	NRSA63J-0R0X	MG RESISTOR	0Ω 1/16W J	
R667	NRSA63J-101X	MG RESISTOR	100Ω 1/16W J	
R668	NRSA63J-101X	MG RESISTOR	100Ω 1/16W J	
R671	NRSA63J-105X	MG RESISTOR	1MΩ 1/16W J	
R672	NRSA63J-102X	MG RESISTOR	1kΩ 1/16W J	
R673	NRSA63J-152X	MG RESISTOR	1.5kΩ 1/16W J	
R674	NRSA63J-152X	MG RESISTOR	1.5kΩ 1/16W J	

⚠Ref No.	Part No.	Part Name	Description Local
R675	NRSA63J-101X	MG RESISTOR	100Ω 1/16W J
R676	NRSA63J-102X	MG RESISTOR	1kΩ 1/16W J
R677	NRSA63J-104X	MG RESISTOR	100kΩ 1/16W J
R678	NRSA63J-104X	MG RESISTOR	100kΩ 1/16W J
R679	NRSA63J-102X	MG RESISTOR	1kΩ 1/16W J
R680	NRSA63J-151X	MG RESISTOR	150Ω 1/16W J
R681	NRSA63J-392X	MG RESISTOR	3.9kΩ 1/16W J
R682	NRSA63J-392X	MG RESISTOR	3.9kΩ 1/16W J
R683	NRSA63J-103X	MG RESISTOR	10kΩ 1/16W J
R684	NRSA63J-103X	MG RESISTOR	10kΩ 1/16W J
R685	QRJ149J-102	UNF C RESISTOR	1kΩ 1/4W J
R687	NRSA63J-103X	MG RESISTOR	10kΩ 1/16W J
R694	NRSA63J-0R0X	MG RESISTOR	0Ω 1/16W J
R695	NRSA63J-0R0X	MG RESISTOR	0Ω 1/16W J
R696	NRSA63J-0R0X	MG RESISTOR	0Ω 1/16W J
R700	NRSA63J-101X	MG RESISTOR	100Ω 1/16W J
R701	NRSA63J-101X	MG RESISTOR	100Ω 1/16W J
R702	NRSA63J-101X	MG RESISTOR	100Ω 1/16W J
R703	NRSA63J-101X	MG RESISTOR	100Ω 1/16W J
R704	NRSA63J-101X	MG RESISTOR	100Ω 1/16W J
R706	NRSA63J-101X	MG RESISTOR	100Ω 1/16W J
R710	NRSA63J-103X	MG RESISTOR	10kΩ 1/16W J
R711	NRSA63J-562X	MG RESISTOR	5.6kΩ 1/16W J
R712	NRSA63J-101X	MG RESISTOR	100Ω 1/16W J
R713	NRSA63J-101X	MG RESISTOR	100Ω 1/16W J
R718	NRSA63J-104X	MG RESISTOR	100kΩ 1/16W J
R719	NRSA63J-563X	MG RESISTOR	56kΩ 1/16W J
R720	NRSA63J-153X	MG RESISTOR	15kΩ 1/16W J
R722	NRSA63J-102X	MG RESISTOR	1kΩ 1/16W J
R723	NRSA63J-102X	MG RESISTOR	1kΩ 1/16W J
R724	NRSA63J-0R0X	MG RESISTOR	0Ω 1/16W J
R725	NRSA63J-102X	MG RESISTOR	1kΩ 1/16W J
R726	NRSA63J-102X	MG RESISTOR	1kΩ 1/16W J
R727	NRSA63J-393X	MG RESISTOR	39kΩ 1/16W J
R728	NRSA63J-393X	MG RESISTOR	39kΩ 1/16W J
R729	QRK129J-5R6	UNF C RESISTOR	5.6Ω 1/2W J
R730	QRK129J-5R6	UNF C RESISTOR	5.6Ω 1/2W J
R731	QRK129J-220	UNF C RESISTOR	22Ω 1/2W J
R732	QRK129J-220	UNF C RESISTOR	22Ω 1/2W J
R733	NRSA63J-153X	MG RESISTOR	15kΩ 1/16W J
R735	NRSA63J-103X	MG RESISTOR	10kΩ 1/16W J
R736	NRSA63J-333X	MG RESISTOR	33kΩ 1/16W J
R737	NRSA63J-103X	MG RESISTOR	10kΩ 1/16W J
R738	NRSA63J-222X	MG RESISTOR	2.2kΩ 1/16W J
R739	NRSA63J-472X	MG RESISTOR	4.7kΩ 1/16W J
R740	NRSA63J-273X	MG RESISTOR	27kΩ 1/16W J
R741	NRSA63J-222X	MG RESISTOR	2.2kΩ 1/16W J
R742	NRSA63J-102X	MG RESISTOR	1kΩ 1/16W J
R743	NRSA63J-333X	MG RESISTOR	33kΩ 1/16W J
R744	NRSA63J-333X	MG RESISTOR	33kΩ 1/16W J
R751	NRSA63J-101X	MG RESISTOR	100Ω 1/16W J
R771	NRSA63J-102X	MG RESISTOR	1kΩ 1/16W J
R772	NRSA63J-104X	MG RESISTOR	100kΩ 1/16W J
R773	NRSA63J-272X	MG RESISTOR	2.7kΩ 1/16W J
R774	NRSA63J-822X	MG RESISTOR	8.2kΩ 1/16W J
R775	NRSA63J-104X	MG RESISTOR	100kΩ 1/16W J
R776	NRSA63J-272X	MG RESISTOR	2.7kΩ 1/16W J
R777	NRSA63J-822X	MG RESISTOR	8.2kΩ 1/16W J
R778	NRSA63J-562X	MG RESISTOR	5.6kΩ 1/16W J
R781	NRSA63J-0R0X	MG RESISTOR	0Ω 1/16W J
R782	NRSA63J-0R0X	MG RESISTOR	0Ω 1/16W J
R791	NRSA63J-0R0X	MG RESISTOR	0Ω 1/16W J
R792	NRSA63J-0R0X	MG RESISTOR	0Ω 1/16W J
R793	NRSA63J-0R0X	MG RESISTOR	0Ω 1/16W J
R794	NRSA63J-0R0X	MG RESISTOR	0Ω 1/16W J
R795	NRSA63J-0R0X	MG RESISTOR	0Ω 1/16W J
R796	NRSA63J-0R0X	MG RESISTOR	0Ω 1/16W J
R797	NRSA63J-0R0X	MG RESISTOR	0Ω 1/16W J
R798	NRSA63J-0R0X	MG RESISTOR	0Ω 1/16W J
R905	NRSA63J-274X	MG RESISTOR	270kΩ 1/16W J
R907	NRS12BJ-471W	MG RESISTOR	470Ω 1/2W J
R908	NRS12BJ-471W	MG RESISTOR	470Ω 1/2W J
R909	NRSA63J-0R0X	MG RESISTOR	0Ω 1/16W J
R910	NRSA63J-0R0X	MG RESISTOR	0Ω 1/16W J
R917	NRSA02J-0R0X	MG RESISTOR	0Ω 1/10W J
R921	NRSA63J-0R0X	MG RESISTOR	0Ω 1/16W J
R922	NRSA63J-0R0X	MG RESISTOR	0Ω 1/16W J
R923	NRSA63J-0R0X	MG RESISTOR	0Ω 1/16W J
R924	NRSA63J-0R0X	MG RESISTOR	0Ω 1/16W J
R925	NRSA63J-0R0X	MG RESISTOR	0Ω 1/16W J
R926	NRSA63J-0R0X	MG RESISTOR	0Ω 1/16W J
R927	NRSA63J-0R0X	MG RESISTOR	0Ω 1/16W J
R928	NRSA63J-222X	MG RESISTOR	2.2kΩ 1/16W J
R933	NRSA63J-0R0X	MG RESISTOR	0Ω 1/16W J
R934	NRSA63J-0R0X	MG RESISTOR	0Ω 1/16W J
R937	NRSA63J-0R0X	MG RESISTOR	0Ω 1/16W J
R938	NRSA63J-0R0X	MG RESISTOR	0Ω 1/16W J
R945	NRSA63J-0R0X	MG RESISTOR	0Ω 1/16W J
R946	NRSA63J-0R0X	MG RESISTOR	0Ω 1/16W J
R951	NRSA63J-820X	MG RESISTOR	82Ω 1/16W J
R952	NRSA63J-820X	MG RESISTOR	82Ω 1/16W J
R953	NRSA63J-820X	MG RESISTOR	82Ω 1/16W J
R954	NRSA63J-0R0X	MG RESISTOR	0Ω 1/16W J
R957	NRSA63J-0R0X	MG RESISTOR	0Ω 1/16W J
R958	NRSA63J-0R0X	MG RESISTOR	0Ω 1/16W J
R967	NRSA63J-0R0X	MG RESISTOR	0Ω 1/16W J
R968	NRSA63J-0R0X	MG RESISTOR	0Ω 1/16W J
R969	NRSA63J-0R0X	MG RESISTOR	0Ω 1/16W J
R971	NRSA63J-680X	MG RESISTOR	68Ω 1/16W J
R972	NRSA63J-680X	MG RESISTOR	68Ω 1/16W J
R973	NRSA63J-0R0X	MG RESISTOR	0Ω 1/16W J
R974	NRSA63J-0R0X	MG RESISTOR	0Ω 1/16W J
R975	NRSA63J-101X	MG RESISTOR	100Ω 1/16W J
R976	NRSA63J-0R0X	MG RESISTOR	0Ω 1/16W J
L101	NQL79GM-100X	COIL	10uH M
L501	NRSA02J-0R0X	MG RESISTOR	0Ω 1/10W J
L601	QQR0621-002Z	FERRITE BEADS	
L602	QQR0621-002Z	FERRITE BEADS	
L605	NQLC8CM-560X	COIL	56uH M
L606	NQLC8CM-560X	COIL	56uH M
L901	NQL52EM-220X	COIL	22uH M
L902	NQL52EM-220X	COIL	22uH M
L903	NQL52EM-220X	COIL	22uH M
L904	NQL52EM-220X	COIL	22uH M
L905	NQL52EM-220X	COIL	22uH M
L906	NQL52EM-220X	COIL	22uH M
CN011	QGF0508C2-50W	CONNECTOR	FFC/FPC (1-50)
CN012	QGF0508C2-40W	CONNECTOR	FFC/FPC (1-40)
CN1T1	QGF1201C2-25	CONNECTOR	FFC/FPC (1-25)
J401	QNZ0825-001	AV JACK	
J402	QNN0349-002	PIN JACK	
J403	QNN0764-001	PIN JACK	
J404	QNN0349-002	PIN JACK	
J405	QNZ0825-001	AV JACK	
J406	QNN0765-001	PIN JACK	
J407	QNZ0825-001	AV JACK	
J409	QNN0766-001	PIN JACK	
J410	QNZ0561-001	D CONNECTOR	
K601	NQR0499-002X	FERRITE BEADS	
K602	NQR0499-002X	FERRITE BEADS	
K603	NQR0499-002X	FERRITE BEADS	
K604	NQR0499-002X	FERRITE BEADS	
K605	NQR0499-002X	FERRITE BEADS	
X551	NAX0868-001X	C RESONATOR	8.00MHz
X601	NAX0857-001X	C RESONATOR	25.00MHz

DRIVE P.W. BOARD ASS'Y (SRA-3004A-M2)

REFER TO PARTS LIST IN PAGE 3-16 FOR THIS P.W. BOARD.

REMOCON P.W. BOARD ASS'Y (SRA-8011A-M2)

REFER TO PARTS LIST IN PAGE 3-26 FOR THIS P.W. BOARD.

TEMP P.W. BOARD ASS'Y (SRA-8203A-M2)

REFER TO PARTS LIST IN PAGE 3-26 FOR THIS P.W. BOARD.

IRIS P.W. BOARD ASS'Y (SRA-8303A-M2)

REFER TO PARTS LIST IN PAGE 3-26 FOR THIS P.W. BOARD.

SD CARD P.W. BOARD ASS'Y (SRA-8505A-M2)

REFER TO PARTS LIST IN PAGE 3-27 FOR THIS P.W. BOARD.

POWER P.W. BOARD ASS'Y (SRA-9014A-M2)

REFER TO PARTS LIST IN PAGE 3-27 FOR THIS P.W. BOARD.

DIGITAL P.W. BOARD ASS'Y (SRA0D127A-M2)

⚠Ref No.	Part No.	Part Name	Description Local
IC6001	JCC5068	IC	
IC6002	SN74LVC1G08V-X	IC	
IC6003	MK2302S-01LF-X	IC	
IC6004	ICS574MLF-X	IC	
IC6011	SN74CBQ16211G-X	IC	
IC6012	SN74CBQ3306AU-X	IC	
IC6013	SN74CBQ3306AU-X	IC	
IC6101	EDD1232AAFA-6B	IC	
IC6102	LP2996MR-X	IC	
IC6250	UPC5702GS-027-X	IC	
IC6251	R1170H331B-X	IC	
IC6501	THC63LVD1023	IC	
IC6724	S-80928CLNB-G-W	IC	
IC6901	R1141Q331B-X	IC	
IC7033	CD74HC4094PW-X	IC	
IC7036	ADC081S021CIS-X	IC	
IC7201	39VF800A7IEKD56	IC(MICRO C ROM)	
IC7203	HY57V161610ETP7	IC	
IC7204	S-80928CLNB-G-W	IC	
IC7206	74LVC1G17GW-X	IC	
IC7601	M306V7MG-154FP	IC(MCU)	
IC7602	ATF16-56FN97	IC	(SERVICE)
IC7603	SN74AHCT1G08V-X	IC	
IC7604	SN74LVC1G04V-X	IC	
IC7605	MM1673XN-X	IC	
IC7606	MM1673XN-X	IC	
IC9001	MP2263DN-C053-X	IC	
IC9101	MM1662FT-X	IC	
IC9201	MP2263DN-C053-X	IC	
IC9301	MM1701CH-X	IC	
Q6201	2SA1530A/QR/-X	TRANSISTOR	
Q6202	2SA1530A/QR/-X	TRANSISTOR	
Q6203	2SA1022/BC/-X	TRANSISTOR	
Q6204	2SA1022/BC/-X	TRANSISTOR	
Q6205	2SA1022/BC/-X	TRANSISTOR	
Q6206	2SA1022/BC/-X	TRANSISTOR	
Q6207	2SC3837K/NP/-X	TRANSISTOR	
Q6208	2SC3837K/NP/-X	TRANSISTOR	
Q6209	2SC3837K/NP/-X	TRANSISTOR	
Q6210	2SC3837K/NP/-X	TRANSISTOR	
Q6211	2SC3837K/NP/-X	TRANSISTOR	
Q6212	2SC3837K/NP/-X	TRANSISTOR	
Q6213	2SC3837K/NP/-X	TRANSISTOR	
Q6214	2SC3837K/NP/-X	TRANSISTOR	
Q6250	2SC3928A/QR/-X	TRANSISTOR	
Q6251	2SC3928A/QR/-X	TRANSISTOR	
Q7030	RT1N441C-X	TRANSISTOR	
Q7032	RT1P441C-X	DIGI TRANSISTOR	
Q7033	RT1P441C-X	DIGI TRANSISTOR	
Q7501	RT1N441C-X	TRANSISTOR	
D6052	1SS355W-X	DIODE	
D6052	MA111-X	SI DIODE	
D7201	RB501V-40-X	SB DIODE	
D7502	1SS355W-X	DIODE	
D7608	RB521S-30-X	SB DIODE	
D9001	EC30HA03L-X	SB DIODE	
D9002	EC30HA03L-X	SB DIODE	
D9003	PTZ3.9B-X	Z DIODE	
D9201	EC30HA03L-X	SB DIODE	
D9202	EC30HA03L-X	SB DIODE	
D9203	PTZ3.9B-X	Z DIODE	
D9204	1SS355W-X	DIODE	
D9204	MA111-X	SI DIODE	
C6002	NCB31CK-104X	C CAPACITOR	0.1uF 16V K
C6003	NCB31CK-104X	C CAPACITOR	0.1uF 16V K
C6004	NCB31CK-104X	C CAPACITOR	0.1uF 16V K
C6031	NCB31CK-104X	C CAPACITOR	0.1uF 16V K
C6051	NCB21HK-104X	C CAPACITOR	0.1uF 50V K
C6052	NCJ41CK-226X-U	C CAPACITOR	22mF 16V K
C6053	NDC31HJ-100X	C CAPACITOR	10pF 50V J
C6054	NCB31CK-104X	C CAPACITOR	0.1uF 16V K
C6055	NCB31CK-104X	C CAPACITOR	0.1uF 16V K
C6101	NCB30JK-225X	C CAPACITOR	2.2uF 6.3V K
C6103	NCB31AK-474X	C CAPACITOR	0.47uF 10V K
C6107	NCB31AK-474X	C CAPACITOR	0.47uF 10V K
C6109	NCB31CK-104X	C CAPACITOR	0.1uF 16V K
C6111	NCB31CK-104X	C CAPACITOR	0.1uF 16V K
C6112	NCB31CK-104X	C CAPACITOR	0.1uF 16V K
C6113	NCB31AK-474X	C CAPACITOR	0.47uF 10V K
C6114	NCB31CK-104X	C CAPACITOR	0.1uF 16V K
C6116	NCB31AK-474X	C CAPACITOR	0.47uF 10V K
C6117	NCB30JK-225X	C CAPACITOR	2.2uF 6.3V K
C6118	NCB31AK-474X	C CAPACITOR	0.47uF 10V K
C6119	NCB31AK-474X	C CAPACITOR	0.47uF 10V K
C6121	NCB31AK-474X	C CAPACITOR	0.47uF 10V K

⚠Ref No.	Part No.	Part Name	Description Local
C6122	NEHL0JM-107X	E CAPACITOR	100uF 6.3V M
C6123	NCB31CK-104X	C CAPACITOR	0.1uF 16V K
C6124	NEHL0JM-107X	E CAPACITOR	100uF 6.3V M
C6125	NCB31CK-104X	C CAPACITOR	0.1uF 16V K
C6126	NCB30JK-225X	C CAPACITOR	2.2uF 6.3V K
C6128	NCB30JK-225X	C CAPACITOR	2.2uF 6.3V K
C6130	NCB30JK-225X	C CAPACITOR	2.2uF 6.3V K
C6132	NEHL1EM-226X	E CAPACITOR	22uF 25V M
C6133	NCB31CK-154X	C CAPACITOR	0.15uF 16V K
C6134	NCB11AK-106X	C CAPACITOR	10uF 10V K
C6135	NCB31CK-104X	C CAPACITOR	0.1uF 16V K
C6139	NCB31CK-104X	C CAPACITOR	0.1uF 16V K
C6205	NCB31CK-104X	C CAPACITOR	0.1uF 16V K
C6211	NCB31CK-104X	C CAPACITOR	0.1uF 16V K
C6217	NCB31CK-104X	C CAPACITOR	0.1uF 16V K
C6218	NCB31CK-104X	C CAPACITOR	0.1uF 16V K
C6219	NCB31CK-104X	C CAPACITOR	0.1uF 16V K
C6220	NCB31CK-104X	C CAPACITOR	0.1uF 16V K
C6227	NCB31CK-104X	C CAPACITOR	0.1uF 16V K
C6228	NCB31CK-104X	C CAPACITOR	0.1uF 16V K
C6229	NCB31CK-104X	C CAPACITOR	0.1uF 16V K
C6236	NCB31CK-104X	C CAPACITOR	0.1uF 16V K
C6237	NCB31CK-104X	C CAPACITOR	0.1uF 16V K
C6238	NCB31CK-104X	C CAPACITOR	0.1uF 16V K
C6239	NCB31CK-104X	C CAPACITOR	0.1uF 16V K
C6240	NCB31CK-104X	C CAPACITOR	0.1uF 16V K
C6241	NCB11AK-106X	C CAPACITOR	10uF 10V K
C6242	NCB31AK-105X	C CAPACITOR	1uF 10V K
C6243	NCB11AK-106X	C CAPACITOR	10uF 10V K
C6244	NCB31AK-105X	C CAPACITOR	1uF 10V K
C6245	NCB11AK-106X	C CAPACITOR	10uF 10V K
C6246	NCB31AK-105X	C CAPACITOR	1uF 10V K
C6247	NCB11AK-106X	C CAPACITOR	10uF 10V K
C6248	NCB31AK-105X	C CAPACITOR	1uF 10V K
C6249	NCB31AK-105X	C CAPACITOR	1uF 10V K
C6250	NCB11AK-106X	C CAPACITOR	10uF 10V K
C6251	NCB31CK-104X	C CAPACITOR	0.1uF 16V K
C6252	NCB11AK-106X	C CAPACITOR	10uF 10V K
C6253	NCB11AK-106X	C CAPACITOR	10uF 10V K
C6254	NCB11AK-106X	C CAPACITOR	10uF 10V K
C6255	NCB11AK-106X	C CAPACITOR	10uF 10V K
C6260	NCB21AK-225X	C CAPACITOR	2.2uF 10V K
C6261	NCB21AK-225X	C CAPACITOR	2.2uF 10V K
C6262	NCB21AK-225X	C CAPACITOR	2.2uF 10V K
C6263	NCB21AK-225X	C CAPACITOR	2.2uF 10V K
C6268	NCB31CK-104X	C CAPACITOR	0.1uF 16V K
C6270	NCB31CK-104X	C CAPACITOR	0.1uF 16V K
C6271	NCB31CK-104X	C CAPACITOR	0.1uF 16V K
C6272	NCB31CK-104X	C CAPACITOR	0.1uF 16V K
C6273	NCB31CK-104X	C CAPACITOR	0.1uF 16V K
C6274	NCB31CK-104X	C CAPACITOR	0.1uF 16V K
C6276	NCB31CK-104X	C CAPACITOR	0.1uF 16V K
C6277	NCB31CK-104X	C CAPACITOR	0.1uF 16V K
C6278	NCB31CK-104X	C CAPACITOR	0.1uF 16V K
C6279	NCB31CK-104X	C CAPACITOR	0.1uF 16V K
C6280	NCB31CK-104X	C CAPACITOR	0.1uF 16V K
C6282	NCB31CK-104X	C CAPACITOR	0.1uF 16V K
C6283	NCB31CK-104X	C CAPACITOR	0.1uF 16V K
C6284	NCB31CK-104X	C CAPACITOR	0.1uF 16V K
C6285	NCB31CK-104X	C CAPACITOR	0.1uF 16V K
C6286	NCB31CK-104X	C CAPACITOR	0.1uF 16V K
C6288	NCB31CK-104X	C CAPACITOR	0.1uF 16V K
C6289	NCB31CK-104X	C CAPACITOR	0.1uF 16V K
C6291	NCB31CK-104X	C CAPACITOR	0.1uF 16V K
C6293	NCB31CK-104X	C CAPACITOR	0.1uF 16V K
C6294	NBZ0007-107X	SP E CAPACITOR	100uF 4V M
C6295	NBZ0007-107X	SP E CAPACITOR	100uF 4V M
C6296	NCB11AK-106X	C CAPACITOR	10uF 10V K
C6297	NCB11AK-106X	C CAPACITOR	10uF 10V K
C6299	NCB31CK-104X	C CAPACITOR	0.1uF 16V K
C6300	NCB31CK-104X	C CAPACITOR	0.1uF 16V K
C6301	NCB31CK-104X	C CAPACITOR	0.1uF 16V K
C6501	NCB31CK-104X	C CAPACITOR	0.1uF 16V K
C6502	NCB31CK-104X	C CAPACITOR	0.1uF 16V K
C6503	NCB31CK-104X	C CAPACITOR	0.1uF 16V K
C6504	NCB31CK-104X	C CAPACITOR	0.1uF 16V K
C6505	NCB31CK-104X	C CAPACITOR	0.1uF 16V K
C6506	NCB31CK-104X	C CAPACITOR	0.1uF 16V K
C6507	NCB31CK-104X	C CAPACITOR	0.1uF 16V K
C6508	NCB31CK-104X	C CAPACITOR	0.1uF 16V K
C6509	NCB31CK-104X	C CAPACITOR	0.1uF 16V K
C6510	NCB31CK-104X	C CAPACITOR	0.1uF 16V K
C6511	NCB31CK-104X	C CAPACITOR	0.1uF 16V K
C6512	NCB31CK-104X	C CAPACITOR	0.1uF 16V K
C6513	NCB31CK-104X	C CAPACITOR	0.1uF 16V K
C6514	NCB31CK-104X	C CAPACITOR	0.1uF 16V K
C6515	NCB31CK-104X	C CAPACITOR	0.1uF 16V K
C6520	NCB11AK-106X	C CAPACITOR	10uF 10V K
C6571	NDC31HJ-101X	C CAPACITOR	100pF 50V J
C6572	NCB21CK-104X	C CAPACITOR	0.1uF 16V K

⚠Ref No.	Part No.	Part Name	Description Local
C6601	NCB31CK-104X	C CAPACITOR	0.1uF 16V K
C6602	NCB31CK-104X	C CAPACITOR	0.1uF 16V K
C6603	NCB31CK-104X	C CAPACITOR	0.1uF 16V K
C6610	NCB31CK-104X	C CAPACITOR	0.1uF 16V K
C6611	NCB31CK-104X	C CAPACITOR	0.1uF 16V K
C6612	NCB31CK-104X	C CAPACITOR	0.1uF 16V K
C6613	NCB31CK-104X	C CAPACITOR	0.1uF 16V K
C6614	NCB31CK-104X	C CAPACITOR	0.1uF 16V K
C6615	NCB31CK-104X	C CAPACITOR	0.1uF 16V K
C6616	NCB31CK-104X	C CAPACITOR	0.1uF 16V K
C6617	NCB31CK-104X	C CAPACITOR	0.1uF 16V K
C6618	NCB31CK-104X	C CAPACITOR	0.1uF 16V K
C6619	NCB31CK-104X	C CAPACITOR	0.1uF 16V K
C6620	NCB31CK-104X	C CAPACITOR	0.1uF 16V K
C6621	NCB31CK-104X	C CAPACITOR	0.1uF 16V K
C6622	NCB31CK-104X	C CAPACITOR	0.1uF 16V K
C6623	NCB31CK-104X	C CAPACITOR	0.1uF 16V K
C6624	NCB31CK-104X	C CAPACITOR	0.1uF 16V K
C6625	NCB31CK-104X	C CAPACITOR	0.1uF 16V K
C6626	NCB31CK-104X	C CAPACITOR	0.1uF 16V K
C6627	NCB31CK-104X	C CAPACITOR	0.1uF 16V K
C6628	NCB31CK-104X	C CAPACITOR	0.1uF 16V K
C6629	NCB31CK-104X	C CAPACITOR	0.1uF 16V K
C6630	NCB31CK-104X	C CAPACITOR	0.1uF 16V K
C6631	NCB31CK-104X	C CAPACITOR	0.1uF 16V K
C6632	NCB31CK-104X	C CAPACITOR	0.1uF 16V K
C6633	NCB31CK-104X	C CAPACITOR	0.1uF 16V K
C6634	NCB31CK-104X	C CAPACITOR	0.1uF 16V K
C6635	NCB31CK-104X	C CAPACITOR	0.1uF 16V K
C6636	NCB31CK-104X	C CAPACITOR	0.1uF 16V K
C6637	NCB31CK-104X	C CAPACITOR	0.1uF 16V K
C6638	NCB31CK-104X	C CAPACITOR	0.1uF 16V K
C6639	NCB31CK-104X	C CAPACITOR	0.1uF 16V K
C6640	NCB31CK-104X	C CAPACITOR	0.1uF 16V K
C6641	NCB31CK-104X	C CAPACITOR	0.1uF 16V K
C6642	NCB31CK-104X	C CAPACITOR	0.1uF 16V K
C6643	NCB31CK-104X	C CAPACITOR	0.1uF 16V K
C6644	NCB31CK-104X	C CAPACITOR	0.1uF 16V K
C6645	NCB31CK-104X	C CAPACITOR	0.1uF 16V K
C6654	NCB31CK-104X	C CAPACITOR	0.1uF 16V K
C6656	NCB31CK-104X	C CAPACITOR	0.1uF 16V K
C6657	NCB31CK-104X	C CAPACITOR	0.1uF 16V K
C6658	NCB31CK-104X	C CAPACITOR	0.1uF 16V K
C6659	NCB31CK-104X	C CAPACITOR	0.1uF 16V K
C6660	NCB31CK-104X	C CAPACITOR	0.1uF 16V K
C6661	NCB31CK-104X	C CAPACITOR	0.1uF 16V K
C6669	NCB31CK-104X	C CAPACITOR	0.1uF 16V K
C6670	NCB31CK-104X	C CAPACITOR	0.1uF 16V K
C6677	NCB31CK-104X	C CAPACITOR	0.1uF 16V K
C6678	NCB31CK-104X	C CAPACITOR	0.1uF 16V K
C6679	NCB31CK-104X	C CAPACITOR	0.1uF 16V K
C6680	NCB31CK-104X	C CAPACITOR	0.1uF 16V K
C6681	NCB31CK-104X	C CAPACITOR	0.1uF 16V K
C6682	NCB31CK-104X	C CAPACITOR	0.1uF 16V K
C6683	NCB31CK-104X	C CAPACITOR	0.1uF 16V K
C6684	NCB31CK-104X	C CAPACITOR	0.1uF 16V K
C6685	NCB31CK-104X	C CAPACITOR	0.1uF 16V K
C6686	NCB31CK-104X	C CAPACITOR	0.1uF 16V K
C6687	NCB31CK-104X	C CAPACITOR	0.1uF 16V K
C6688	NCB31CK-104X	C CAPACITOR	0.1uF 16V K
C6689	NCB31CK-104X	C CAPACITOR	0.1uF 16V K
C6690	NCB31CK-104X	C CAPACITOR	0.1uF 16V K
C6691	NCB31CK-104X	C CAPACITOR	0.1uF 16V K
C6692	NCB31CK-104X	C CAPACITOR	0.1uF 16V K
C6693	NCB31CK-104X	C CAPACITOR	0.1uF 16V K
C6694	NCB31CK-104X	C CAPACITOR	0.1uF 16V K
C6695	NCB31CK-104X	C CAPACITOR	0.1uF 16V K
C6696	NCB31CK-104X	C CAPACITOR	0.1uF 16V K
C6697	NCB31CK-104X	C CAPACITOR	0.1uF 16V K
C6698	NCB31CK-104X	C CAPACITOR	0.1uF 16V K
C6699	NCB31CK-104X	C CAPACITOR	0.1uF 16V K
C6701	NCF11CZ-475X	C CAPACITOR	4.7uF 16V Z
C6723	NCB31HK-222X	C CAPACITOR	2200pF 50V K
C6724	NCB31CK-103X	C CAPACITOR	0.01uF 16V K
C6901	NBZ0007-107X	SP E CAPACITOR	100uF 4V M
C6902	NCB31CK-104X	C CAPACITOR	0.1uF 16V K
C6903	NCB31CK-104X	C CAPACITOR	0.1uF 16V K
C6904	NCB31CK-104X	C CAPACITOR	0.1uF 16V K
C6905	NCB31CK-104X	C CAPACITOR	0.1uF 16V K
C6906	NCB31CK-104X	C CAPACITOR	0.1uF 16V K
C6907	NCB31CK-104X	C CAPACITOR	0.1uF 16V K
C6908	NCB31CK-104X	C CAPACITOR	0.1uF 16V K
C6909	NCB31CK-104X	C CAPACITOR	0.1uF 16V K
C6910	NCB31CK-104X	C CAPACITOR	0.1uF 16V K
C6911	NCB31CK-104X	C CAPACITOR	0.1uF 16V K
C6912	NCB11AK-106X	C CAPACITOR	10uF 10V K
C6913	NCB31CK-104X	C CAPACITOR	0.1uF 16V K
C6914	NCB31CK-104X	C CAPACITOR	0.1uF 16V K
C6915	NCB31CK-104X	C CAPACITOR	0.1uF 16V K
C6916	NCB31CK-104X	C CAPACITOR	0.1uF 16V K
C6917	NCB31CK-104X	C CAPACITOR	0.1uF 16V K
C6918	NCB31CK-104X	C CAPACITOR	0.1uF 16V K
C6919	NCB31CK-104X	C CAPACITOR	0.1uF 16V K
C6921	NCB11AK-106X	C CAPACITOR	10uF 10V K
C6922	NCB31CK-104X	C CAPACITOR	0.1uF 16V K
C6923	NCB11AK-106X	C CAPACITOR	10uF 10V K
C6924	NCB31CK-104X	C CAPACITOR	0.1uF 16V K
C6925	NCB11AK-106X	C CAPACITOR	10uF 10V K
C6926	NCB31CK-104X	C CAPACITOR	0.1uF 16V K
C6927	NCB11AK-106X	C CAPACITOR	10uF 10V K
C6928	NCB31CK-104X	C CAPACITOR	0.1uF 16V K
C6929	NCB31AK-105X	C CAPACITOR	1uF 10V K
C7039	NCB31HK-102X	C CAPACITOR	1000pF 50V K
C7040	NCB11AK-106X	C CAPACITOR	10uF 10V K
C7044	NCB31CK-104X	C CAPACITOR	0.1uF 16V K
C7051	NCB31CK-104X	C CAPACITOR	0.1uF 16V K
C7052	NCB31CK-104X	C CAPACITOR	0.1uF 16V K
C7053	NCB31CK-104X	C CAPACITOR	0.1uF 16V K
C7054	NCB31CK-104X	C CAPACITOR	0.1uF 16V K
C7055	NCB31CK-104X	C CAPACITOR	0.1uF 16V K
C7056	NCB31CK-104X	C CAPACITOR	0.1uF 16V K
C7057	NCB31CK-104X	C CAPACITOR	0.1uF 16V K
C7058	NCB31CK-104X	C CAPACITOR	0.1uF 16V K
C7059	NCB31CK-104X	C CAPACITOR	0.1uF 16V K
C7060	NCB31CK-104X	C CAPACITOR	0.1uF 16V K
C7061	NCB31CK-104X	C CAPACITOR	0.1uF 16V K
C7062	NCB31CK-104X	C CAPACITOR	0.1uF 16V K
C7063	NCB31CK-104X	C CAPACITOR	0.1uF 16V K
C7064	NCB31CK-104X	C CAPACITOR	0.1uF 16V K
C7065	NCB31CK-104X	C CAPACITOR	0.1uF 16V K
C7066	NCB31CK-104X	C CAPACITOR	0.1uF 16V K
C7067	NCB31CK-104X	C CAPACITOR	0.1uF 16V K
C7068	NCB31CK-104X	C CAPACITOR	0.1uF 16V K
C7073	NCB31CK-104X	C CAPACITOR	0.1uF 16V K
C7202	NCB31CK-104X	C CAPACITOR	0.1uF 16V K
C7203	NCB31CK-104X	C CAPACITOR	0.1uF 16V K
C7204	NCB31CK-104X	C CAPACITOR	0.1uF 16V K
C7205	NCB31CK-104X	C CAPACITOR	0.1uF 16V K
C7206	NCB31CK-104X	C CAPACITOR	0.1uF 16V K
C7207	NCB31CK-104X	C CAPACITOR	0.1uF 16V K
C7208	NCB31CK-104X	C CAPACITOR	0.1uF 16V K
C7209	NCB31CK-104X	C CAPACITOR	0.1uF 16V K
C7211	NCB31HK-102X	C CAPACITOR	1000pF 50V K
C7215	NDC31HJ-330X	C CAPACITOR	33pF 50V J
C7216	NCB31CK-104X	C CAPACITOR	0.1uF 16V K
C7501	NCB31CK-104X	C CAPACITOR	0.1uF 16V K
C7504	NDC31HJ-100X	C CAPACITOR	10pF 50V J
C7505	NDC31HJ-101X	C CAPACITOR	100pF 50V J
C7506	NCB31CK-103X	C CAPACITOR	0.01uF 16V K
C7507	NDC31HJ-100X	C CAPACITOR	10pF 50V J
C7508	NDC31HJ-100X	C CAPACITOR	10pF 50V J
C7510	NDC31HJ-100X	C CAPACITOR	10pF 50V J
C7514	NDC31HJ-100X	C CAPACITOR	10pF 50V J
C7515	NDC31HJ-100X	C CAPACITOR	10pF 50V J
C7516	NDC31HJ-100X	C CAPACITOR	10pF 50V J
C7517	NDC31HJ-100X	C CAPACITOR	10pF 50V J
C7601	NCB11CK-105X	C CAPACITOR	1uF 16V K
C7602	NCB31CK-104X	C CAPACITOR	0.1uF 16V K
C7603	NCB31CK-104X	C CAPACITOR	0.1uF 16V K
C7604	NCB31HK-102X	C CAPACITOR	1000pF 50V K
C7605	NCB31HK-221X	C CAPACITOR	220pF 50V K
C7606	NCB21AK-225X	C CAPACITOR	2.2uF 10V K
C7607	NCB31HK-681X	C CAPACITOR	680pF 50V K
C7608	NCB31CK-104X	C CAPACITOR	0.1uF 16V K
C7609	NCB31HK-681X	C CAPACITOR	680pF 50V K
C7610	NDC31HJ-102X	C CAPACITOR	1000pF 50V J
C7611	NDC31HJ-221X	C CAPACITOR	220pF 50V J
C7612	NCB21AK-225X	C CAPACITOR	2.2uF 10V K
C7615	NCB31CK-104X	C CAPACITOR	0.1uF 16V K
C7616	NCB31CK-104X	C CAPACITOR	0.1uF 16V K
C7617	NCB31CK-104X	C CAPACITOR	0.1uF 16V K
C7618	NCF11CZ-475X	C CAPACITOR	4.7uF 16V Z
C7619	NCB11AK-106X	C CAPACITOR	10uF 10V K
C7620	NCF11CZ-475X	C CAPACITOR	4.7uF 16V Z
C7621	NCB11AK-106X	C CAPACITOR	10uF 10V K
C7625	NCB31CK-104X	C CAPACITOR	0.1uF 16V K
C7631	NCB31AK-224X	C CAPACITOR	0.22uF 10V K
C7632	NCB31AK-224X	C CAPACITOR	0.22uF 10V K
C7633	NDC31HJ-151X	C CAPACITOR	150pF 50V J
C9001	NDC31HJ-102X	C CAPACITOR	1000pF 50V J
C9002	NCJ41EK-106X-U	C CAPACITOR	10mF 25V K
C9003	NCB31EK-104X	C CAPACITOR	0.1uF 25V K
C9004	NCB31HK-103X	C CAPACITOR	0.01uF 50V K
C9005	NCJ41CK-226X-U	C CAPACITOR	22mF 16V K
C9006	NDC31HJ-120X	C CAPACITOR	12pF 50V J
C9007	NCB31HK-103X	C CAPACITOR	0.01uF 50V K
C9010	NCJ41CK-226X-U	C CAPACITOR	22mF 16V K
C9101	NCB11CK-475X	C CAPACITOR	4.7uF 16V K
C9103	NCB11CK-225X	C CAPACITOR	2.2uF 16V K
C9201	NDC31HJ-102X	C CAPACITOR	1000pF 50V J

⚠Ref No.	Part No.	Part Name	Description Local
C9202	NCJ41EK-106X-U	C CAPACITOR	10mF 25V K
C9204	NCB31HK-103X	C CAPACITOR	0.01uF 50V K
C9205	NCJ41CK-226X-U	C CAPACITOR	22mF 16V K
C9206	NDC31HJ-120X	C CAPACITOR	12pF 50V J
C9207	NCB31HK-153X	C CAPACITOR	0.015uF 50V K
C9208	NCJ41CK-226X-U	C CAPACITOR	22mF 16V K
C9209	NCB31HK-102X	C CAPACITOR	1000pF 50V K
C9211	NCB31CK-473X	C CAPACITOR	0.047uF 16V K
C9301	NDC31HJ-101X	C CAPACITOR	100pF 50V J
C9302	NCB11CK-475X	C CAPACITOR	4.7uF 16V K
C9303	NCB31HK-103X	C CAPACITOR	0.01uF 50V K
C9304	NCB11CK-475X	C CAPACITOR	4.7uF 16V K
C9306	NRSA63J-0R0X	MG RESISTOR	0Ω 1/16W J
C9313	NCB31HK-102X	C CAPACITOR	1000pF 50V K
C9314	NCB31HK-102X	C CAPACITOR	1000pF 50V K
R6002	NRSA63J-0R0X	MG RESISTOR	0Ω 1/16W J
R6003	NRSA63J-0R0X	MG RESISTOR	0Ω 1/16W J
R6006	NRSA63J-0R0X	MG RESISTOR	0Ω 1/16W J
R6008	NRSA63J-0R0X	MG RESISTOR	0Ω 1/16W J
R6009	NRSA63J-220X	MG RESISTOR	22Ω 1/16W J
R6014	NRSA63J-0R0X	MG RESISTOR	0Ω 1/16W J
R6017	NRSA63J-0R0X	MG RESISTOR	0Ω 1/16W J
R6018	NRSA63J-0R0X	MG RESISTOR	0Ω 1/16W J
R6019	NRSA63J-0R0X	MG RESISTOR	0Ω 1/16W J
R6020	NRSA63J-0R0X	MG RESISTOR	0Ω 1/16W J
R6026	NRSA63J-0R0X	MG RESISTOR	0Ω 1/16W J
R6028	NRSA63J-0R0X	MG RESISTOR	0Ω 1/16W J
R6031	NRSA63J-0R0X	MG RESISTOR	0Ω 1/16W J
R6032	NRSA63D-470X	MG RESISTOR	47Ω 1/16W D
R6033	NRSA63J-0R0X	MG RESISTOR	0Ω 1/16W J
R6034	NRSA63J-0R0X	MG RESISTOR	0Ω 1/16W J
R6037	NRSA63D-330X	MG RESISTOR	33Ω 1/16W D
R6055	NRS181J-0R0X	MG RESISTOR	0Ω 1/8W J
R6057	NRSA63J-220X	MG RESISTOR	22Ω 1/16W J
R6058	NRSA63J-220X	MG RESISTOR	22Ω 1/16W J
R6059	NRSA63J-101X	MG RESISTOR	100Ω 1/16W J
R6060	NRSA63J-0R0X	MG RESISTOR	0Ω 1/16W J
R6061	NRSA63J-0R0X	MG RESISTOR	0Ω 1/16W J
R6064	NRSA63J-220X	MG RESISTOR	22Ω 1/16W J
R6065	NRSA63J-220X	MG RESISTOR	22Ω 1/16W J
R6066	NRSA63J-220X	MG RESISTOR	22Ω 1/16W J
R6068	NRZ0080-0R0X	NET RESISTOR	0Ω 1/16W J
R6072	NRSA63J-0R0X	MG RESISTOR	0Ω 1/16W J
R6073	NRSA63J-0R0X	MG RESISTOR	0Ω 1/16W J
R6074	NRSA63J-0R0X	MG RESISTOR	0Ω 1/16W J
R6075	NRSA63J-0R0X	MG RESISTOR	0Ω 1/16W J
R6080	NRSA63J-0R0X	MG RESISTOR	0Ω 1/16W J
R6101	NRSA63J-220X	MG RESISTOR	22Ω 1/16W J
R6102	NRSA63J-220X	MG RESISTOR	22Ω 1/16W J
R6103	NRSA63J-220X	MG RESISTOR	22Ω 1/16W J
R6104	NRSA63J-220X	MG RESISTOR	22Ω 1/16W J
R6105	NRSA63J-220X	MG RESISTOR	22Ω 1/16W J
R6106	NRSA63J-220X	MG RESISTOR	22Ω 1/16W J
R6107	NRSA63J-100X	MG RESISTOR	10Ω 1/16W J
R6108	NRSA63J-100X	MG RESISTOR	10Ω 1/16W J
R6109	NRSA63J-220X	MG RESISTOR	22Ω 1/16W J
R6110	NRSA63J-220X	MG RESISTOR	22Ω 1/16W J
R6111	NRSA63J-220X	MG RESISTOR	22Ω 1/16W J
R6112	NRSA63J-470X	MG RESISTOR	47Ω 1/16W J
R6113	NRSA63J-470X	MG RESISTOR	47Ω 1/16W J
R6114	NRSA63J-470X	MG RESISTOR	47Ω 1/16W J
R6115	NRSA63J-470X	MG RESISTOR	47Ω 1/16W J
R6116	NRSA63J-470X	MG RESISTOR	47Ω 1/16W J
R6117	NRSA63J-470X	MG RESISTOR	47Ω 1/16W J
R6118	NRSA63J-470X	MG RESISTOR	47Ω 1/16W J
R6119	NRSA63J-470X	MG RESISTOR	47Ω 1/16W J
R6120	NRSA63J-470X	MG RESISTOR	47Ω 1/16W J
R6121	NRSA63J-470X	MG RESISTOR	47Ω 1/16W J
R6122	NRSA63J-470X	MG RESISTOR	47Ω 1/16W J
R6127	NRSA63J-1R5X	MG RESISTOR	1.5Ω 1/16W J
R6141	NRSA63J-0R0X	MG RESISTOR	0Ω 1/16W J
R6142	NRSA63J-0R0X	MG RESISTOR	0Ω 1/16W J
R6201	NRSA63J-0R0X	MG RESISTOR	0Ω 1/16W J
R6202	NRSA63J-0R0X	MG RESISTOR	0Ω 1/16W J
R6203	NRSA63J-0R0X	MG RESISTOR	0Ω 1/16W J
R6204	NRSA63J-0R0X	MG RESISTOR	0Ω 1/16W J
R6205	NRSA63J-332X	MG RESISTOR	3.3kΩ 1/16W J
R6207	NRSA63J-0R0X	MG RESISTOR	0Ω 1/16W J
R6209	NRSA63J-0R0X	MG RESISTOR	0Ω 1/16W J
R6214	NRSA63J-0R0X	MG RESISTOR	0Ω 1/16W J
R6215	NRSA63J-0R0X	MG RESISTOR	0Ω 1/16W J
R6216	NRSA63J-0R0X	MG RESISTOR	0Ω 1/16W J
R6217	NRSA63J-0R0X	MG RESISTOR	0Ω 1/16W J
R6220	NRSA63J-682X	MG RESISTOR	6.8kΩ 1/16W J
R6223	NRSA63J-0R0X	MG RESISTOR	0Ω 1/16W J
R6224	NRSA63J-0R0X	MG RESISTOR	0Ω 1/16W J
R6225	NRSA63J-0R0X	MG RESISTOR	0Ω 1/16W J
R6226	NRSA63J-0R0X	MG RESISTOR	0Ω 1/16W J
R6227	NRSA63J-391X	MG RESISTOR	390Ω 1/16W J
R6228	NRSA63J-332X	MG RESISTOR	3.3kΩ 1/16W J
R6229	NRSA63J-682X	MG RESISTOR	6.8kΩ 1/16W J
R6230	NRSA63J-0R0X	MG RESISTOR	0Ω 1/16W J
R6231	NRSA63J-0R0X	MG RESISTOR	0Ω 1/16W J
R6232	NRSA63J-0R0X	MG RESISTOR	0Ω 1/16W J
R6233	NRSA63J-0R0X	MG RESISTOR	0Ω 1/16W J
R6234	NRSA63J-391X	MG RESISTOR	390Ω 1/16W J
R6235	NRSA63J-101X	MG RESISTOR	100Ω 1/16W J
R6236	NRSA63J-331X	MG RESISTOR	330Ω 1/16W J
R6237	NRSA63J-332X	MG RESISTOR	3.3kΩ 1/16W J
R6238	NRSA63J-101X	MG RESISTOR	100Ω 1/16W J
R6239	NRSA63J-331X	MG RESISTOR	330Ω 1/16W J
R6240	NRSA63J-682X	MG RESISTOR	6.8kΩ 1/16W J
R6241	NRSA63J-101X	MG RESISTOR	100Ω 1/16W J
R6242	NRSA63J-331X	MG RESISTOR	330Ω 1/16W J
R6243	NRSA63J-102X	MG RESISTOR	1kΩ 1/16W J
R6244	NRSA63J-101X	MG RESISTOR	100Ω 1/16W J
R6245	NRSA63J-331X	MG RESISTOR	330Ω 1/16W J
R6246	NRSA63J-332X	MG RESISTOR	3.3kΩ 1/16W J
R6247	NRSA63J-682X	MG RESISTOR	6.8kΩ 1/16W J
R6248	NRSA63J-473X	MG RESISTOR	47kΩ 1/16W J
R6249	NRSA63J-333X	MG RESISTOR	33kΩ 1/16W J
R6251	NRSA63J-0R0X	MG RESISTOR	0Ω 1/16W J
R6252	NRSA63J-0R0X	MG RESISTOR	0Ω 1/16W J
R6253	NRSA63J-222X	MG RESISTOR	2.2kΩ 1/16W J
R6254	NRSA63J-151X	MG RESISTOR	150Ω 1/16W J
R6255	NRSA63J-472X	MG RESISTOR	4.7kΩ 1/16W J
R6256	NRSA63J-0R0X	MG RESISTOR	0Ω 1/16W J
R6257	NRSA63J-222X	MG RESISTOR	2.2kΩ 1/16W J
R6258	NRSA63J-151X	MG RESISTOR	150Ω 1/16W J
R6259	NRSA63J-472X	MG RESISTOR	4.7kΩ 1/16W J
R6260	NRSA63J-0R0X	MG RESISTOR	0Ω 1/16W J
R6261	NRSA63J-222X	MG RESISTOR	2.2kΩ 1/16W J
R6262	NRSA63J-151X	MG RESISTOR	150Ω 1/16W J
R6263	NRSA63J-472X	MG RESISTOR	4.7kΩ 1/16W J
R6264	NRSA63J-0R0X	MG RESISTOR	0Ω 1/16W J
R6265	NRSA63J-103X	MG RESISTOR	10kΩ 1/16W J
R6266	NRSA63J-221X	MG RESISTOR	220Ω 1/16W J
R6267	NRSA63J-472X	MG RESISTOR	4.7kΩ 1/16W J
R6268	NRSA63D-242X	MG RESISTOR	2.4kΩ 1/16W D
R6269	NRSA63D-242X	MG RESISTOR	2.4kΩ 1/16W D
R6270	NRSA63D-242X	MG RESISTOR	2.4kΩ 1/16W D
R6271	NRSA63D-242X	MG RESISTOR	2.4kΩ 1/16W D
R6273	NRSA63J-0R0X	MG RESISTOR	0Ω 1/16W J
R6274	NRSA63J-220X	MG RESISTOR	22Ω 1/16W J
R6275	NRSA63J-0R0X	MG RESISTOR	0Ω 1/16W J
R6276	NRSA63J-0R0X	MG RESISTOR	0Ω 1/16W J
R6277	NRSA63J-391X	MG RESISTOR	390Ω 1/16W J
R6279	NRSA63J-0R0X	MG RESISTOR	0Ω 1/16W J
R6280	NRSA63J-331X	MG RESISTOR	330Ω 1/16W J
R6281	NRSA63J-101X	MG RESISTOR	100Ω 1/16W J
R6282	NRSA63J-331X	MG RESISTOR	330Ω 1/16W J
R6283	NRSA63J-101X	MG RESISTOR	100Ω 1/16W J
R6284	NRSA63J-0R0X	MG RESISTOR	0Ω 1/16W J
R6285	NRSA63J-0R0X	MG RESISTOR	0Ω 1/16W J
R6286	NRSA63J-391X	MG RESISTOR	390Ω 1/16W J
R6287	NRSA63J-391X	MG RESISTOR	390Ω 1/16W J
R6288	NRSA63J-391X	MG RESISTOR	390Ω 1/16W J
R6289	NRSA63J-102X	MG RESISTOR	1kΩ 1/16W J
R6290	NRSA63J-0R0X	MG RESISTOR	0Ω 1/16W J
R6291	NRSA63J-473X	MG RESISTOR	47kΩ 1/16W J
R6292	NRSA63J-473X	MG RESISTOR	47kΩ 1/16W J
R6300	NRSA63J-0R0X	MG RESISTOR	0Ω 1/16W J
R6302	NRSA63J-0R0X	MG RESISTOR	0Ω 1/16W J
R6305	NRSA63J-0R0X	MG RESISTOR	0Ω 1/16W J
R6332	NRSA63J-0R0X	MG RESISTOR	0Ω 1/16W J
R6333	NRSA63J-0R0X	MG RESISTOR	0Ω 1/16W J
R6338	NRSA63J-0R0X	MG RESISTOR	0Ω 1/16W J
R6339	NRSA63J-0R0X	MG RESISTOR	0Ω 1/16W J
R6501	NRSA63J-101X	MG RESISTOR	100Ω 1/16W J
R6502	NRSA63J-101X	MG RESISTOR	100Ω 1/16W J
R6503	NRSA63J-0R0X	MG RESISTOR	0Ω 1/16W J
R6505	NRSA63J-102X	MG RESISTOR	1kΩ 1/16W J
R6508	NRSA63J-0R0X	MG RESISTOR	0Ω 1/16W J
R6509	NRSA63J-102X	MG RESISTOR	1kΩ 1/16W J
R6511	NRSA63J-102X	MG RESISTOR	1kΩ 1/16W J
R6514	NRSA63J-0R0X	MG RESISTOR	0Ω 1/16W J
R6534	NRSA63J-0R0X	MG RESISTOR	0Ω 1/16W J
R6568	NRSA63J-0R0X	MG RESISTOR	0Ω 1/16W J
R6571	NRSA63J-0R0X	MG RESISTOR	0Ω 1/16W J
R6572	NRSA63J-0R0X	MG RESISTOR	0Ω 1/16W J
R6573	NRSA63J-0R0X	MG RESISTOR	0Ω 1/16W J
R6574	NRSA63J-0R0X	MG RESISTOR	0Ω 1/16W J
R6575	NRSA63J-0R0X	MG RESISTOR	0Ω 1/16W J
R6576	NRSA63J-0R0X	MG RESISTOR	0Ω 1/16W J
R6598	NRSA63J-104X	MG RESISTOR	100kΩ 1/16W J
R6607	NRSA63J-101X	MG RESISTOR	100Ω 1/16W J
R6609	NRSA63J-101X	MG RESISTOR	100Ω 1/16W J
R6611	NRSA63J-102X	MG RESISTOR	1kΩ 1/16W J
R6707	NRSA63J-0R0X	MG RESISTOR	0Ω 1/16W J

⚠Ref No.	Part No.	Part Name	Description Local
R6712	NRSA63J-0R0X	MG RESISTOR	0Ω 1/16W J
R6713	NRSA63J-0R0X	MG RESISTOR	0Ω 1/16W J
R6730	NRSA63J-0R0X	MG RESISTOR	0Ω 1/16W J
R6731	NRSA63J-0R0X	MG RESISTOR	0Ω 1/16W J
R6732	NRSA63J-0R0X	MG RESISTOR	0Ω 1/16W J
R6921	NRSA63J-0R0X	MG RESISTOR	0Ω 1/16W J
R6923	NRSA63J-0R0X	MG RESISTOR	0Ω 1/16W J
R6924	NRSA63J-0R0X	MG RESISTOR	0Ω 1/16W J
R6943	NRSA63J-150X	MG RESISTOR	15Ω 1/16W J
R6946	NRSA63D-220X	MG RESISTOR	22Ω 1/16W D
R6953	NRSA63J-0R0X	MG RESISTOR	0Ω 1/16W J
R7030	NRSA63J-0R0X	MG RESISTOR	0Ω 1/16W J
R7031	NRSA63J-0R0X	MG RESISTOR	0Ω 1/16W J
R7032	NRSA63J-151X	MG RESISTOR	150Ω 1/16W J
R7033	NRSA63J-0R0X	MG RESISTOR	0Ω 1/16W J
R7034	NRSA63J-0R0X	MG RESISTOR	0Ω 1/16W J
R7040	NRSA63J-0R0X	MG RESISTOR	0Ω 1/16W J
R7041	NRSA63J-223X	MG RESISTOR	22kΩ 1/16W J
R7047	NRSA63J-0R0X	MG RESISTOR	0Ω 1/16W J
R7049	NRSA63J-0R0X	MG RESISTOR	0Ω 1/16W J
R7051	NRSA63J-0R0X	MG RESISTOR	0Ω 1/16W J
R7052	NRSA63J-473X	MG RESISTOR	47kΩ 1/16W J
R7054	NRSA63J-0R0X	MG RESISTOR	0Ω 1/16W J
R7055	NRSA63J-0R0X	MG RESISTOR	0Ω 1/16W J
R7056	NRSA63J-0R0X	MG RESISTOR	0Ω 1/16W J
R7057	NRSA63J-0R0X	MG RESISTOR	0Ω 1/16W J
R7058	NRSA63J-0R0X	MG RESISTOR	0Ω 1/16W J
R7059	NRSA63J-0R0X	MG RESISTOR	0Ω 1/16W J
R7061	NRSA63J-0R0X	MG RESISTOR	0Ω 1/16W J
R7062	NRSA63J-0R0X	MG RESISTOR	0Ω 1/16W J
R7063	NRSA63J-0R0X	MG RESISTOR	0Ω 1/16W J
R7064	NRSA63J-103X	MG RESISTOR	10kΩ 1/16W J
R7065	NRSA63J-103X	MG RESISTOR	10kΩ 1/16W J
R7066	NRSA63J-562X	MG RESISTOR	5.6kΩ 1/16W J
R7067	NRSA63J-562X	MG RESISTOR	5.6kΩ 1/16W J
R7068	NRSA63J-0R0X	MG RESISTOR	0Ω 1/16W J
R7069	NRSA63J-0R0X	MG RESISTOR	0Ω 1/16W J
R7070	NRSA63J-0R0X	MG RESISTOR	0Ω 1/16W J
R7071	NRSA63J-0R0X	MG RESISTOR	0Ω 1/16W J
R7077	NRSA63J-331X	MG RESISTOR	330Ω 1/16W J
R7078	NRSA63J-331X	MG RESISTOR	330Ω 1/16W J
R7081	NRSA63J-473X	MG RESISTOR	47kΩ 1/16W J
R7084	NRSA63J-221X	MG RESISTOR	220Ω 1/16W J
R7085	NRSA63J-221X	MG RESISTOR	220Ω 1/16W J
R7086	NRSA63J-0R0X	MG RESISTOR	0Ω 1/16W J
R7087	NRSA63J-0R0X	MG RESISTOR	0Ω 1/16W J
R7088	NRSA63J-0R0X	MG RESISTOR	0Ω 1/16W J
R7089	NRSA63J-0R0X	MG RESISTOR	0Ω 1/16W J
R7090	NRSA63J-0R0X	MG RESISTOR	0Ω 1/16W J
R7091	NRSA63J-0R0X	MG RESISTOR	0Ω 1/16W J
R7092	NRSA63J-101X	MG RESISTOR	100Ω 1/16W J
R7093	NRSA63J-101X	MG RESISTOR	100Ω 1/16W J
R7094	NRSA63J-101X	MG RESISTOR	100Ω 1/16W J
R7095	NRSA63J-0R0X	MG RESISTOR	0Ω 1/16W J
R7097	NRSA63J-0R0X	MG RESISTOR	0Ω 1/16W J
R7098	NRSA63J-0R0X	MG RESISTOR	0Ω 1/16W J
R7099	NRSA63J-0R0X	MG RESISTOR	0Ω 1/16W J
R7100	NRSA63J-0R0X	MG RESISTOR	0Ω 1/16W J
R7103	NRSA63J-0R0X	MG RESISTOR	0Ω 1/16W J
R7106	NRSA63J-0R0X	MG RESISTOR	0Ω 1/16W J
R7110	NRSA63J-0R0X	MG RESISTOR	0Ω 1/16W J
R7113	NRSA63J-0R0X	MG RESISTOR	0Ω 1/16W J
R7123	NRSA63J-0R0X	MG RESISTOR	0Ω 1/16W J
R7124	NRSA63J-0R0X	MG RESISTOR	0Ω 1/16W J
R7128	NRSA63J-0R0X	MG RESISTOR	0Ω 1/16W J
R7170	NRSA63J-0R0X	MG RESISTOR	0Ω 1/16W J
R7171	NRSA63J-0R0X	MG RESISTOR	0Ω 1/16W J
R7172	NRSA63J-0R0X	MG RESISTOR	0Ω 1/16W J
R7173	NRSA63J-0R0X	MG RESISTOR	0Ω 1/16W J
R7174	NRSA63J-473X	MG RESISTOR	47kΩ 1/16W J
R7175	NRSA63J-0R0X	MG RESISTOR	0Ω 1/16W J
R7176	NRSA63J-0R0X	MG RESISTOR	0Ω 1/16W J
R7177	NRSA63J-0R0X	MG RESISTOR	0Ω 1/16W J
R7178	NRSA63J-0R0X	MG RESISTOR	0Ω 1/16W J
R7179	NRSA63J-0R0X	MG RESISTOR	0Ω 1/16W J
R7184	NRSA63J-0R0X	MG RESISTOR	0Ω 1/16W J
R7186	NCB31HK-103X	C CAPACITOR	0.01uF 50V K
R7187	NRSA63J-0R0X	MG RESISTOR	0Ω 1/16W J
R7192	NRSA63J-0R0X	MG RESISTOR	0Ω 1/16W J
R7201	NRSA63J-473X	MG RESISTOR	47kΩ 1/16W J
R7202	NRSA63J-473X	MG RESISTOR	47kΩ 1/16W J
R7203	NRSA63J-473X	MG RESISTOR	47kΩ 1/16W J
R7207	NRSA63J-101X	MG RESISTOR	100Ω 1/16W J
R7208	NRSA63J-0R0X	MG RESISTOR	0Ω 1/16W J
R7211	NRSA63J-0R0X	MG RESISTOR	0Ω 1/16W J
R7214	NRSA63J-0R0X	MG RESISTOR	0Ω 1/16W J
R7215	NRSA63J-473X	MG RESISTOR	47kΩ 1/16W J
R7216	NRSA63J-473X	MG RESISTOR	47kΩ 1/16W J
R7217	NRSA63J-473X	MG RESISTOR	47kΩ 1/16W J
R7221	NRSA63J-0R0X	MG RESISTOR	0Ω 1/16W J
R7223	NRSA63J-473X	MG RESISTOR	47kΩ 1/16W J
R7224	NRSA63J-473X	MG RESISTOR	47kΩ 1/16W J
R7225	NRSA63J-473X	MG RESISTOR	47kΩ 1/16W J
R7239	NRSA63J-103X	MG RESISTOR	10kΩ 1/16W J
R7240	NQR0599-003X	FERRITE BEADS	
R7349	NRSA63J-103X	MG RESISTOR	10kΩ 1/16W J
R7350	NRSA63J-103X	MG RESISTOR	10kΩ 1/16W J
R7351	NRSA63J-103X	MG RESISTOR	10kΩ 1/16W J
R7504	NRSA63J-104X	MG RESISTOR	100kΩ 1/16W J
R7505	NRSA63J-103X	MG RESISTOR	10kΩ 1/16W J
R7512	NRSA63J-0R0X	MG RESISTOR	0Ω 1/16W J
R7513	NRSA63J-0R0X	MG RESISTOR	0Ω 1/16W J
R7514	NRSA63J-0R0X	MG RESISTOR	0Ω 1/16W J
R7515	NRSA63J-102X	MG RESISTOR	1kΩ 1/16W J
R7601	NRSA63J-103X	MG RESISTOR	10kΩ 1/16W J
R7602	NRSA63J-103X	MG RESISTOR	10kΩ 1/16W J
R7603	NRSA63J-0R0X	MG RESISTOR	0Ω 1/16W J
R7604	NRSA63J-0R0X	MG RESISTOR	0Ω 1/16W J
R7605	NRSA63J-471X	MG RESISTOR	470Ω 1/16W J
R7606	NRSA63J-105X	MG RESISTOR	1MΩ 1/16W J
R7607	NRSA63J-682X	MG RESISTOR	6.8kΩ 1/16W J
R7608	NRSA63J-105X	MG RESISTOR	1MΩ 1/16W J
R7609	NRSA63J-0R0X	MG RESISTOR	0Ω 1/16W J
R7610	NRSA63J-0R0X	MG RESISTOR	0Ω 1/16W J
R7611	NRSA63J-102X	MG RESISTOR	1kΩ 1/16W J
R7612	NRSA63J-471X	MG RESISTOR	470Ω 1/16W J
R7613	NRSA63J-102X	MG RESISTOR	1kΩ 1/16W J
R7614	NRSA63J-0R0X	MG RESISTOR	0Ω 1/16W J
R7615	NRSA63J-0R0X	MG RESISTOR	0Ω 1/16W J
R7616	NRSA63J-0R0X	MG RESISTOR	0Ω 1/16W J
R7618	NRSA63J-0R0X	MG RESISTOR	0Ω 1/16W J
R7619	NRSA63J-0R0X	MG RESISTOR	0Ω 1/16W J
R7620	NRSA63J-102X	MG RESISTOR	1kΩ 1/16W J
R7622	NRSA63J-0R0X	MG RESISTOR	0Ω 1/16W J
R7623	NRSA63J-0R0X	MG RESISTOR	0Ω 1/16W J
R7624	NRSA63J-0R0X	MG RESISTOR	0Ω 1/16W J
R7625	NRSA63J-0R0X	MG RESISTOR	0Ω 1/16W J
R7626	NRSA63J-0R0X	MG RESISTOR	0Ω 1/16W J
R7627	NRSA63J-0R0X	MG RESISTOR	0Ω 1/16W J
R7628	NRSA63J-333X	MG RESISTOR	33kΩ 1/16W J
R7631	NRSA63J-821X	MG RESISTOR	820Ω 1/16W J
R7632	NRSA63J-222X	MG RESISTOR	2.2kΩ 1/16W J
R7634	NRSA63J-821X	MG RESISTOR	820Ω 1/16W J
R7635	NRSA63J-222X	MG RESISTOR	2.2kΩ 1/16W J
R7643	NRSA63J-0R0X	MG RESISTOR	0Ω 1/16W J
R7644	NRSA63J-0R0X	MG RESISTOR	0Ω 1/16W J
R7646	NRSA63J-0R0X	MG RESISTOR	0Ω 1/16W J
R7649	NRSA63J-103X	MG RESISTOR	10kΩ 1/16W J
R7658	NRSA63J-103X	MG RESISTOR	10kΩ 1/16W J
R7659	NRSA63J-560X	MG RESISTOR	56Ω 1/16W J
R8796	NRSA63J-0R0X	MG RESISTOR	0Ω 1/16W J
R8797	NRSA63J-0R0X	MG RESISTOR	0Ω 1/16W J
R8798	NRSA63J-0R0X	MG RESISTOR	0Ω 1/16W J
R8799	NRSA63J-0R0X	MG RESISTOR	0Ω 1/16W J
R9001	NRSA63J-473X	MG RESISTOR	47kΩ 1/16W J
R9002	NRSA02J-0R0X	MG RESISTOR	0Ω 1/10W J
R9003	NRSA63D-273X	MG RESISTOR	27kΩ 1/16W D
R9004	NRSA63J-684X	MG RESISTOR	680kΩ 1/16W J
R9005	NRSA63D-103X	MG RESISTOR	10kΩ 1/16W D
R9006	NRSA63J-512X	MG RESISTOR	5.1kΩ 1/16W J
R9007	NRSA02J-0R0X	MG RESISTOR	0Ω 1/10W J
R9008	NRSA63J-0R0X	MG RESISTOR	0Ω 1/16W J
R9201	NRSA63J-473X	MG RESISTOR	47kΩ 1/16W J
R9202	NRSA02J-0R0X	MG RESISTOR	0Ω 1/10W J
R9203	NRSA63D-302X	MG RESISTOR	3kΩ 1/16W D
R9205	NRSA63D-103X	MG RESISTOR	10kΩ 1/16W D
R9206	NRSA63J-332X	MG RESISTOR	3.3kΩ 1/16W J
R9207	NRSA02J-0R0X	MG RESISTOR	0Ω 1/10W J
R9209	NRSA63J-0R0X	MG RESISTOR	0Ω 1/16W J
R9302	NRSA02J-0R0X	MG RESISTOR	0Ω 1/10W J
R9306	NRSA02J-0R0X	MG RESISTOR	0Ω 1/10W J
R9308	NRSA63J-0R0X	MG RESISTOR	0Ω 1/16W J
R9510	NRSA63J-104X	MG RESISTOR	100kΩ 1/16W J
RA6001	NRZ0080-0R0X	NET RESISTOR	0Ω 1/16W J
RA6002	NRZ0034-0R0W	NET RESISTOR	0Ω 1/32W J x4
RA6007	NRZ0080-0R0X	NET RESISTOR	0Ω 1/16W J
RA6008	NRZ0080-0R0X	NET RESISTOR	0Ω 1/16W J
RA6009	NRZ0034-0R0W	NET RESISTOR	0Ω 1/32W J x4
RA6010	NRZ0034-0R0W	NET RESISTOR	0Ω 1/32W J x4
RA6011	NRZ0080-0R0X	NET RESISTOR	0Ω 1/16W J
RA6101	NRZ0040-220X	NET RESISTOR	22Ω 1/16W J x4
RA6102	NRZ0080-220X	NET RESISTOR	22Ω 1/16W J
RA6103	NRZ0040-220X	NET RESISTOR	22Ω 1/16W J x4
RA6104	NRZ0040-220X	NET RESISTOR	22Ω 1/16W J x4
RA6105	NRZ0080-220X	NET RESISTOR	22Ω 1/16W J
RA6106	NRZ0040-220X	NET RESISTOR	22Ω 1/16W J x4
RA6107	NRZ0080-220X	NET RESISTOR	22Ω 1/16W J
RA6108	NRZ0080-220X	NET RESISTOR	22Ω 1/16W J
RA6109	NRZ0040-470X	NET RESISTOR	47Ω 1/16W J x4
RA6110	NRZ0080-470X	NET RESISTOR	47Ω 1/16W J

⚠Ref No.	Part No.	Part Name	Description Local
RA6111	NRZ0040-470X	NET RESISTOR	47Ω 1/16W J x4
RA6112	NRZ0040-470X	NET RESISTOR	47Ω 1/16W J x4
RA6113	NRZ0080-470X	NET RESISTOR	47Ω 1/16W J
RA6114	NRZ0040-470X	NET RESISTOR	47Ω 1/16W J x4
RA6115	NRZ0080-470X	NET RESISTOR	47Ω 1/16W J
RA6116	NRZ0080-470X	NET RESISTOR	47Ω 1/16W J
RA6501	NRZ0034-0R0W	NET RESISTOR	0Ω 1/32W J x4
RA6502	NRZ0034-0R0W	NET RESISTOR	0Ω 1/32W J x4
RA6503	NRZ0034-0R0W	NET RESISTOR	0Ω 1/32W J x4
RA6504	NRZ0080-0R0X	NET RESISTOR	0Ω 1/16W J
RA6505	NRZ0080-0R0X	NET RESISTOR	0Ω 1/16W J
RA6506	NRZ0080-0R0X	NET RESISTOR	0Ω 1/16W J
RA6541	NRZ0033-0R0W	NET RESISTOR	0Ω
RA6542	NRZ0080-0R0X	NET RESISTOR	0Ω 1/16W J
RA6543	NRZ0033-0R0W	NET RESISTOR	0Ω
RA6544	NRZ0080-0R0X	NET RESISTOR	0Ω 1/16W J
RA6545	NRZ0033-0R0W	NET RESISTOR	0Ω
RA6546	NRZ0080-0R0X	NET RESISTOR	0Ω 1/16W J
RA7202	NRZ0080-473X	NET RESISTOR	47kΩ
RA7203	NRZ0080-473X	NET RESISTOR	47kΩ
RA7204	NRZ0080-473X	NET RESISTOR	47kΩ
RA7205	NRZ0080-473X	NET RESISTOR	47kΩ
RA7503	NQR0271-004X	EMI FILTER	
RA7601	NRZ0034-0R0W	NET RESISTOR	0Ω 1/32W J x4
RA7602	NRZ0034-0R0W	NET RESISTOR	0Ω 1/32W J x4
RA7603	NRZ0034-0R0W	NET RESISTOR	0Ω 1/32W J x4
RA7605	NRZ0034-0R0W	NET RESISTOR	0Ω 1/32W J x4
RA7606	NRZ0034-101W	NET RESISTOR	100Ω 1/32W J x4
L6051	NRSA02J-0R0X	MG RESISTOR	0Ω 1/10W J
L6101	NRSA02J-0R0X	MG RESISTOR	0Ω 1/10W J
L6102	NQLE3GK-220X	COIL	22uH K
L6103	NQLE3GK-220X	COIL	22uH K
L6115	NQR0499-001X	FERRITE BEADS	
L6254	NRSA02J-0R0X	MG RESISTOR	0Ω 1/10W J
L6265	NQR0499-001X	FERRITE BEADS	
L6266	NQR0499-001X	FERRITE BEADS	
L6511	NRZ0034-0R0W	NET RESISTOR	0Ω 1/32W J x4
L6512	NRZ0034-0R0W	NET RESISTOR	0Ω 1/32W J x4
L6513	NRZ0034-0R0W	NET RESISTOR	0Ω 1/32W J x4
L6514	NRZ0034-0R0W	NET RESISTOR	0Ω 1/32W J x4
L6515	NRZ0034-0R0W	NET RESISTOR	0Ω 1/32W J x4
L6516	NRZ0034-0R0W	NET RESISTOR	0Ω 1/32W J x4
L6531	NQR0199-007X	FERRITE BEADS	
L6701	NQR0413-003X	FERRITE BEADS	
L6911	NQR0499-001X	FERRITE BEADS	
L6912	NQR0499-001X	FERRITE BEADS	
L6922	NQLE3GK-220X	COIL	22uH K
L6924	NQLE3GK-220X	COIL	22uH K
L6925	NQLE3GK-220X	COIL	22uH K
L6931	NQR0499-001X	FERRITE BEADS	
L7501	NRSA63J-0R0X	MG RESISTOR	0Ω 1/16W J
L7502	NRSA63J-0R0X	MG RESISTOR	0Ω 1/16W J
L9001	NQLC8CM-150X	COIL	15uH M
L9201	NQLC8CM-150X	COIL	15uH M
L9204	NQR0562-014X	CHOKE COIL	
L9306	NRSA02J-0R0X	MG RESISTOR	0Ω 1/10W J
CN011	QGF0508F4-50X	CONNECTOR	FFC/FPC (1-50)
CN012	QGF0508F4-40X	CONNECTOR	FFC/FPC (1-40)
CN110	QGB0603L1-B0	CONNECTOR	B-B (1-110)
J8501	NNZ0117-001	CONNECTOR	DIFITAL-IN-2
J8502	NNZ0117-001	CONNECTOR	DIFITAL-IN-1
K6052	NQR0489-002X	FERRITE BEADS	
K6250	NRSA02J-0R0X	MG RESISTOR	0Ω 1/10W J
K6268	NRSA02J-0R0X	MG RESISTOR	0Ω 1/10W J
K6271	NQR0499-001X	FERRITE BEADS	
K6272	NQR0499-001X	FERRITE BEADS	
K6274	NQR0499-001X	FERRITE BEADS	
K6921	NRSA02J-0R0X	MG RESISTOR	0Ω 1/10W J
K7032	NRSA02J-0R0X	MG RESISTOR	0Ω 1/10W J
K7033	NRSA02J-0R0X	MG RESISTOR	0Ω 1/10W J
K7034	NRSA02J-0R0X	MG RESISTOR	0Ω 1/10W J
K7202	NRSA63J-0R0X	MG RESISTOR	0Ω 1/16W J
K7211	NQR0499-002X	FERRITE BEADS	
K7501	NQR0413-002X	FERRITE BEADS	
K7504	NRSA63J-0R0X	MG RESISTOR	0Ω 1/16W J
K7601	NRSA02J-0R0X	MG RESISTOR	0Ω 1/10W J
LC7505	NQR0483-005X	EMI FILTER	100uF 25V Z
LC9301	NQR0470-003X	EMI FILTER	100pF 50V
LC9303	NQR0483-005X	EMI FILTER	100uF 25V Z
LC9305	NQR0483-005X	EMI FILTER	100uF 25V Z
LC9307	NQR0483-005X	EMI FILTER	100uF 25V Z
X6250	NAX0580-001X	CXO	27.0000MHz
X6250	NAX0824-001X	CXO	27.000000MHz
X7001	NAX0669-001X	C RESONATOR	6.000MHz
X7601	NAX0613-001X	C RESONATOR	16.000MHz

SIDE CONTROL P.W. BOARD ASS'Y (SRA0L013A-M2)

⚠Ref No.	Part No.	Part Name	Description Local
D0843	UDZW10B-X	Z DIODE	
D0844	UDZW10B-X	Z DIODE	
D0845	UDZW10B-X	Z DIODE	
C0843	QETN1HM-106Z	E CAPACITOR	10uF 50V M
C0844	NCB21CK-105X	C CAPACITOR	1uF 16V K
C0845	NCB21CK-105X	C CAPACITOR	1uF 16V K
R0844	NRSA63J-750X	MG RESISTOR	75Ω 1/16W J
R0845	NRSA63J-224X	MG RESISTOR	220kΩ 1/16W J
R0846	NRSA63J-224X	MG RESISTOR	220kΩ 1/16W J
R0849	NRSA63J-0R0X	MG RESISTOR	0Ω 1/16W J
R0851	NRSA63J-562X	MG RESISTOR	5.6kΩ 1/16W J
R0852	NRSA63J-153X	MG RESISTOR	15kΩ 1/16W J
R0853	NRSA63J-562X	MG RESISTOR	5.6kΩ 1/16W J
R0854	NRSA63J-153X	MG RESISTOR	15kΩ 1/16W J
J0841	QNN0787-001	PIN JACK	INPUT-4(S/V/L/R)
S0851	QSW0619-003Z	PUSH SWITCH	MENU
S0852	QSW0619-003Z	PUSH SWITCH	CH+
S0853	QSW0619-003Z	PUSH SWITCH	CH-
S0854	QSW0619-003Z	PUSH SWITCH	VOL-
S0855	QSW0619-003Z	PUSH SWITCH	VOL+
S0856	QSW0619-003Z	PUSH SWITCH	INPUT

FRONT LED P.W. BOARD ASS'Y (SRA0L113A-M2)

REFER TO PARTS LIST IN PAGE 3-33 FOR THIS P.W. BOARD.

LAMP COVER P.W. BOARD ASS'Y (SRA0L211A-M2)

REFER TO PARTS LIST IN PAGE 3-34 FOR THIS P.W. BOARD.

TUNER P.W. BOARD ASS'Y (SRA0R013A-M2)

REFER TO PARTS LIST IN PAGE 3-34 FOR THIS P.W. BOARD.

ATSC TUNER MODULE P.W. BOARD ASS'Y (SSD-2111A-M2)

REFER TO PARTS LIST IN PAGE 3-34 FOR THIS P.W. BOARD.

PRINTED WIRING BOARD PARTS LIST [HD-61FH97]

ANALOG P.W. BOARD ASS'Y (SRA-1015A-M2)

REFER TO PARTS LIST IN PAGE 3-12 FOR THIS P.W. BOARD.

DRIVE P.W. BOARD ASS'Y (SRA-3004A-M2)

REFER TO PARTS LIST IN PAGE 3-16 FOR THIS P.W. BOARD.

REMOCON P.W. BOARD ASS'Y (SRA-8011A-M2)

REFER TO PARTS LIST IN PAGE 3-26 FOR THIS P.W. BOARD.

TEMP P.W. BOARD ASS'Y (SRA-8203A-M2)

REFER TO PARTS LIST IN PAGE 3-26 FOR THIS P.W. BOARD.

IRIS P.W. BOARD ASS'Y (SRA-8303A-M2)

REFER TO PARTS LIST IN PAGE 3-26 FOR THIS P.W. BOARD.

SD CARD P.W. BOARD ASS'Y (SRA-8505A-M2)

REFER TO PARTS LIST IN PAGE 3-27 FOR THIS P.W. BOARD.

POWER P.W. BOARD ASS'Y (SRA-9014A-M2)

REFER TO PARTS LIST IN PAGE 3-27 FOR THIS P.W. BOARD.

DIGITAL P.W. BOARD ASS'Y (SRA0D123A-M2)

⚠Ref No.	Part No.	Part Name	Description	Local
IC6001	JCC5068	IC		
IC6002	SN74LVC1G08V-X	IC		
IC6003	MK2302S-01LF-X	IC		
IC6004	ICS574MLF-X	IC		
IC6011	SN74CBQ16211G-X	IC		
IC6012	SN74CBQ3306AU-X	IC		
IC6013	SN74CBQ3306AU-X	IC		
IC6101	EDD1232AAFA-6B	IC		
IC6102	LP2996MR-X	IC		
IC6250	UPC5702GS-027-X	IC		
IC6251	R1170H331B-X	IC		
IC6501	THC63LVD1023	IC		
IC6724	S-80928CLNB-G-W	IC		
IC6901	R1141Q331B-X	IC		
IC7033	CD74HC4094PW-X	IC		
IC7036	ADC081S021CIS-X	IC		
IC7201	39VF800A7IEKD56	IC(MICRO C ROM)		
IC7203	HY57V161610ETP7	IC		
IC7204	S-80928CLNB-G-W	IC		
IC7206	74LVC1G17GW-X	IC		
IC7601	M306V7MG-154FP	IC(MCU)		
IC7602	ATF16-56FH97	IC	(SERVICE)	
IC7603	SN74AHCT1G08V-X	IC		
IC7604	SN74LVC1G04V-X	IC		
IC7605	MM1673XN-X	IC		
IC7606	MM1673XN-X	IC		
IC7607	ICL3221CAZ-X	IC		
IC9001	MP2263DN-C053-X	IC		
IC9101	MM1662FT-X	IC		
IC9201	MP2263DN-C053-X	IC		
IC9301	MM1701CH-X	IC		
Q6201	2SA1530A/QR/-X	TRANSISTOR		
Q6202	2SA1530A/QR/-X	TRANSISTOR		
Q6203	2SA1022/BC/-X	TRANSISTOR		
Q6204	2SA1022/BC/-X	TRANSISTOR		
Q6205	2SA1022/BC/-X	TRANSISTOR		
Q6206	2SA1022/BC/-X	TRANSISTOR		
Q6207	2SC3837K/NP/-X	TRANSISTOR		
Q6208	2SC3837K/NP/-X	TRANSISTOR		
Q6209	2SC3837K/NP/-X	TRANSISTOR		
Q6210	2SC3837K/NP/-X	TRANSISTOR		
Q6211	2SC3837K/NP/-X	TRANSISTOR		
Q6212	2SC3837K/NP/-X	TRANSISTOR		
Q6213	2SC3837K/NP/-X	TRANSISTOR		
Q6214	2SC3837K/NP/-X	TRANSISTOR		
Q6250	2SC3928A/QR/-X	TRANSISTOR		
Q6251	2SC3928A/QR/-X	TRANSISTOR		
Q7030	RT1N441C-X	TRANSISTOR		
Q7032	RT1P441C-X	DIGI TRANSISTOR		
Q7033	RT1P441C-X	DIGI TRANSISTOR		
Q7501	RT1N441C-X	TRANSISTOR		
D6052	1SS355W-X	DIODE		
D7201	RB501V-40-X	SB DIODE		
D7502	1SS355W-X	DIODE		
D7604	MA8120-X	Z DIODE		
D7605	MA8120-X	Z DIODE		
D7606	MA8120-X	Z DIODE		
D7607	MA8120-X	Z DIODE		
D7608	RB521S-30-X	SB DIODE		
D9001	EC30HA03L-X	SB DIODE		
D9002	EC30HA03L-X	SB DIODE		
D9003	PTZ3.9B-X	Z DIODE		
D9201	EC30HA03L-X	SB DIODE		
D9202	EC30HA03L-X	SB DIODE		
D9203	PTZ3.9B-X	Z DIODE		
D9204	1SS355W-X	DIODE		
D9204	MA111-X	SI DIODE		
C6002	NCB31CK-104X	C CAPACITOR	0.1uF 16V K	
C6003	NCB31CK-104X	C CAPACITOR	0.1uF 16V K	
C6004	NCB31CK-104X	C CAPACITOR	0.1uF 16V K	
C6031	NCB31CK-104X	C CAPACITOR	0.1uF 16V K	
C6051	NCB21HK-104X	C CAPACITOR	0.1uF 50V K	
C6052	NCJ41CK-226X-U	C CAPACITOR	22mF 16V K	
C6053	NDC31HJ-100X	C CAPACITOR	10pF 50V J	
C6054	NCB31CK-104X	C CAPACITOR	0.1uF 16V K	
C6055	NCB31CK-104X	C CAPACITOR	0.1uF 16V K	
C6101	NCB30JK-225X	C CAPACITOR	2.2uF 6.3V K	
C6103	NCB31AK-474X	C CAPACITOR	0.47uF 10V K	
C6107	NCB31AK-474X	C CAPACITOR	0.47uF 10V K	
C6109	NCB31CK-104X	C CAPACITOR	0.1uF 16V K	
C6111	NCB31CK-104X	C CAPACITOR	0.1uF 16V K	
C6112	NCB31CK-104X	C CAPACITOR	0.1uF 16V K	
C6113	NCB31AK-474X	C CAPACITOR	0.47uF 10V K	
C6114	NCB31CK-104X	C CAPACITOR	0.1uF 16V K	
C6116	NCB31AK-474X	C CAPACITOR	0.47uF 10V K	
C6117	NCB30JK-225X	C CAPACITOR	2.2uF 6.3V K	
C6118	NCB31AK-474X	C CAPACITOR	0.47uF 10V K	
C6119	NCB31AK-474X	C CAPACITOR	0.47uF 10V K	
C6121	NCB31AK-474X	C CAPACITOR	0.47uF 10V K	
C6122	NEHL0JM-107X	E CAPACITOR	100uF 6.3V M	
C6123	NCB31CK-104X	C CAPACITOR	0.1uF 16V K	
C6124	NEHL0JM-107X	E CAPACITOR	100uF 6.3V M	
C6125	NCB31CK-104X	C CAPACITOR	0.1uF 16V K	
C6126	NCB30JK-225X	C CAPACITOR	2.2uF 6.3V K	
C6128	NCB30JK-225X	C CAPACITOR	2.2uF 6.3V K	
C6130	NCB30JK-225X	C CAPACITOR	2.2uF 6.3V K	
C6132	NEHL1EM-226X	E CAPACITOR	22uF 25V M	
C6133	NCB31CK-154X	C CAPACITOR	0.15uF 16V K	
C6134	NCB11AK-106X	C CAPACITOR	10uF 10V K	
C6135	NCB31CK-104X	C CAPACITOR	0.1uF 16V K	
C6139	NCB31CK-104X	C CAPACITOR	0.1uF 16V K	
C6205	NCB31CK-104X	C CAPACITOR	0.1uF 16V K	
C6211	NCB31CK-104X	C CAPACITOR	0.1uF 16V K	
C6217	NCB31CK-104X	C CAPACITOR	0.1uF 16V K	
C6218	NCB31CK-104X	C CAPACITOR	0.1uF 16V K	
C6219	NCB31CK-104X	C CAPACITOR	0.1uF 16V K	
C6220	NCB31CK-104X	C CAPACITOR	0.1uF 16V K	
C6227	NCB31CK-104X	C CAPACITOR	0.1uF 16V K	
C6228	NCB31CK-104X	C CAPACITOR	0.1uF 16V K	
C6229	NCB31CK-104X	C CAPACITOR	0.1uF 16V K	
C6236	NCB31CK-104X	C CAPACITOR	0.1uF 16V K	
C6237	NCB31CK-104X	C CAPACITOR	0.1uF 16V K	
C6238	NCB31CK-104X	C CAPACITOR	0.1uF 16V K	
C6239	NCB31CK-104X	C CAPACITOR	0.1uF 16V K	
C6240	NCB31CK-104X	C CAPACITOR	0.1uF 16V K	
C6241	NCB11AK-106X	C CAPACITOR	10uF 10V K	
C6242	NCB31AK-105X	C CAPACITOR	1uF 10V K	
C6243	NCB11AK-106X	C CAPACITOR	10uF 10V K	
C6244	NCB31AK-105X	C CAPACITOR	1uF 10V K	
C6245	NCB11AK-106X	C CAPACITOR	10uF 10V K	
C6246	NCB31AK-105X	C CAPACITOR	1uF 10V K	
C6247	NCB11AK-106X	C CAPACITOR	10uF 10V K	
C6248	NCB31AK-105X	C CAPACITOR	1uF 10V K	
C6249	NCB31AK-105X	C CAPACITOR	1uF 10V K	
C6250	NCB11AK-106X	C CAPACITOR	10uF 10V K	
C6251	NCB31CK-104X	C CAPACITOR	0.1uF 16V K	

⚠Ref No.	Part No.	Part Name	Description Local
C6252	NCB11AK-106X	C CAPACITOR	10uF 10V K
C6253	NCB11AK-106X	C CAPACITOR	10uF 10V K
C6254	NCB11AK-106X	C CAPACITOR	10uF 10V K
C6255	NCB11AK-106X	C CAPACITOR	10uF 10V K
C6260	NCB21AK-225X	C CAPACITOR	2.2uF 10V K
C6261	NCB21AK-225X	C CAPACITOR	2.2uF 10V K
C6262	NCB21AK-225X	C CAPACITOR	2.2uF 10V K
C6263	NCB21AK-225X	C CAPACITOR	2.2uF 10V K
C6268	NCB31CK-104X	C CAPACITOR	0.1uF 16V K
C6270	NCB31CK-104X	C CAPACITOR	0.1uF 16V K
C6271	NCB31CK-104X	C CAPACITOR	0.1uF 16V K
C6272	NCB31CK-104X	C CAPACITOR	0.1uF 16V K
C6273	NCB31CK-104X	C CAPACITOR	0.1uF 16V K
C6274	NCB31CK-104X	C CAPACITOR	0.1uF 16V K
C6276	NCB31CK-104X	C CAPACITOR	0.1uF 16V K
C6277	NCB31CK-104X	C CAPACITOR	0.1uF 16V K
C6278	NCB31CK-104X	C CAPACITOR	0.1uF 16V K
C6279	NCB31CK-104X	C CAPACITOR	0.1uF 16V K
C6280	NCB31CK-104X	C CAPACITOR	0.1uF 16V K
C6282	NCB31CK-104X	C CAPACITOR	0.1uF 16V K
C6283	NCB31CK-104X	C CAPACITOR	0.1uF 16V K
C6284	NCB31CK-104X	C CAPACITOR	0.1uF 16V K
C6285	NCB31CK-104X	C CAPACITOR	0.1uF 16V K
C6286	NCB31CK-104X	C CAPACITOR	0.1uF 16V K
C6288	NCB31CK-104X	C CAPACITOR	0.1uF 16V K
C6289	NCB31CK-104X	C CAPACITOR	0.1uF 16V K
C6291	NCB31CK-104X	C CAPACITOR	0.1uF 16V K
C6293	NCB31CK-104X	C CAPACITOR	0.1uF 16V K
C6294	NBZ0007-107X	SP E CAPACITOR	100uF 4V M
C6295	NBZ0007-107X	SP E CAPACITOR	100uF 4V M
C6296	NCB11AK-106X	C CAPACITOR	10uF 10V K
C6297	NCB11AK-106X	C CAPACITOR	10uF 10V K
C6299	NCB31CK-104X	C CAPACITOR	0.1uF 16V K
C6300	NCB31CK-104X	C CAPACITOR	0.1uF 16V K
C6301	NCB31CK-104X	C CAPACITOR	0.1uF 16V K
C6501	NCB31CK-104X	C CAPACITOR	0.1uF 16V K
C6502	NCB31CK-104X	C CAPACITOR	0.1uF 16V K
C6503	NCB31CK-104X	C CAPACITOR	0.1uF 16V K
C6504	NCB31CK-104X	C CAPACITOR	0.1uF 16V K
C6505	NCB31CK-104X	C CAPACITOR	0.1uF 16V K
C6506	NCB31CK-104X	C CAPACITOR	0.1uF 16V K
C6507	NCB31CK-104X	C CAPACITOR	0.1uF 16V K
C6508	NCB31CK-104X	C CAPACITOR	0.1uF 16V K
C6509	NCB31CK-104X	C CAPACITOR	0.1uF 16V K
C6510	NCB31CK-104X	C CAPACITOR	0.1uF 16V K
C6511	NCB31CK-104X	C CAPACITOR	0.1uF 16V K
C6512	NCB31CK-104X	C CAPACITOR	0.1uF 16V K
C6513	NCB31CK-104X	C CAPACITOR	0.1uF 16V K
C6514	NCB31CK-104X	C CAPACITOR	0.1uF 16V K
C6515	NCB31CK-104X	C CAPACITOR	0.1uF 16V K
C6520	NCB11AK-106X	C CAPACITOR	10uF 10V K
C6571	NDC31HJ-101X	C CAPACITOR	100pF 50V J
C6572	NCB21CK-104X	C CAPACITOR	0.1uF 16V K
C6601	NCB31CK-104X	C CAPACITOR	0.1uF 16V K
C6602	NCB31CK-104X	C CAPACITOR	0.1uF 16V K
C6603	NCB31CK-104X	C CAPACITOR	0.1uF 16V K
C6610	NCB31CK-104X	C CAPACITOR	0.1uF 16V K
C6611	NCB31CK-104X	C CAPACITOR	0.1uF 16V K
C6612	NCB31CK-104X	C CAPACITOR	0.1uF 16V K
C6613	NCB31CK-104X	C CAPACITOR	0.1uF 16V K
C6614	NCB31CK-104X	C CAPACITOR	0.1uF 16V K
C6615	NCB31CK-104X	C CAPACITOR	0.1uF 16V K
C6616	NCB31CK-104X	C CAPACITOR	0.1uF 16V K
C6617	NCB31CK-104X	C CAPACITOR	0.1uF 16V K
C6618	NCB31CK-104X	C CAPACITOR	0.1uF 16V K
C6619	NCB31CK-104X	C CAPACITOR	0.1uF 16V K
C6620	NCB31CK-104X	C CAPACITOR	0.1uF 16V K
C6621	NCB31CK-104X	C CAPACITOR	0.1uF 16V K
C6622	NCB31CK-104X	C CAPACITOR	0.1uF 16V K
C6623	NCB31CK-104X	C CAPACITOR	0.1uF 16V K
C6624	NCB31CK-104X	C CAPACITOR	0.1uF 16V K
C6625	NCB31CK-104X	C CAPACITOR	0.1uF 16V K
C6626	NCB31CK-104X	C CAPACITOR	0.1uF 16V K
C6627	NCB31CK-104X	C CAPACITOR	0.1uF 16V K
C6628	NCB31CK-104X	C CAPACITOR	0.1uF 16V K
C6629	NCB31CK-104X	C CAPACITOR	0.1uF 16V K
C6630	NCB31CK-104X	C CAPACITOR	0.1uF 16V K
C6631	NCB31CK-104X	C CAPACITOR	0.1uF 16V K
C6632	NCB31CK-104X	C CAPACITOR	0.1uF 16V K
C6633	NCB31CK-104X	C CAPACITOR	0.1uF 16V K
C6634	NCB31CK-104X	C CAPACITOR	0.1uF 16V K
C6635	NCB31CK-104X	C CAPACITOR	0.1uF 16V K
C6636	NCB31CK-104X	C CAPACITOR	0.1uF 16V K
C6637	NCB31CK-104X	C CAPACITOR	0.1uF 16V K
C6638	NCB31CK-104X	C CAPACITOR	0.1uF 16V K
C6639	NCB31CK-104X	C CAPACITOR	0.1uF 16V K
C6640	NCB31CK-104X	C CAPACITOR	0.1uF 16V K
C6641	NCB31CK-104X	C CAPACITOR	0.1uF 16V K
C6642	NCB31CK-104X	C CAPACITOR	0.1uF 16V K
C6643	NCB31CK-104X	C CAPACITOR	0.1uF 16V K
C6644	NCB31CK-104X	C CAPACITOR	0.1uF 16V K
C6645	NCB31CK-104X	C CAPACITOR	0.1uF 16V K
C6654	NCB31CK-104X	C CAPACITOR	0.1uF 16V K
C6656	NCB31CK-104X	C CAPACITOR	0.1uF 16V K
C6657	NCB31CK-104X	C CAPACITOR	0.1uF 16V K
C6658	NCB31CK-104X	C CAPACITOR	0.1uF 16V K
C6659	NCB31CK-104X	C CAPACITOR	0.1uF 16V K
C6660	NCB31CK-104X	C CAPACITOR	0.1uF 16V K
C6661	NCB31CK-104X	C CAPACITOR	0.1uF 16V K
C6669	NCB31CK-104X	C CAPACITOR	0.1uF 16V K
C6670	NCB31CK-104X	C CAPACITOR	0.1uF 16V K
C6677	NCB31CK-104X	C CAPACITOR	0.1uF 16V K
C6678	NCB31CK-104X	C CAPACITOR	0.1uF 16V K
C6679	NCB31CK-104X	C CAPACITOR	0.1uF 16V K
C6680	NCB31CK-104X	C CAPACITOR	0.1uF 16V K
C6681	NCB31CK-104X	C CAPACITOR	0.1uF 16V K
C6682	NCB31CK-104X	C CAPACITOR	0.1uF 16V K
C6683	NCB31CK-104X	C CAPACITOR	0.1uF 16V K
C6684	NCB31CK-104X	C CAPACITOR	0.1uF 16V K
C6685	NCB31CK-104X	C CAPACITOR	0.1uF 16V K
C6686	NCB31CK-104X	C CAPACITOR	0.1uF 16V K
C6687	NCB31CK-104X	C CAPACITOR	0.1uF 16V K
C6688	NCB31CK-104X	C CAPACITOR	0.1uF 16V K
C6689	NCB31CK-104X	C CAPACITOR	0.1uF 16V K
C6690	NCB31CK-104X	C CAPACITOR	0.1uF 16V K
C6691	NCB31CK-104X	C CAPACITOR	0.1uF 16V K
C6692	NCB31CK-104X	C CAPACITOR	0.1uF 16V K
C6693	NCB31CK-104X	C CAPACITOR	0.1uF 16V K
C6694	NCB31CK-104X	C CAPACITOR	0.1uF 16V K
C6695	NCB31CK-104X	C CAPACITOR	0.1uF 16V K
C6696	NCB31CK-104X	C CAPACITOR	0.1uF 16V K
C6697	NCB31CK-104X	C CAPACITOR	0.1uF 16V K
C6698	NCB31CK-104X	C CAPACITOR	0.1uF 16V K
C6699	NCB31CK-104X	C CAPACITOR	0.1uF 16V K
C6701	NCF11CZ-475X	C CAPACITOR	4.7uF 16V Z
C6723	NCB31HK-222X	C CAPACITOR	2200pF 50V K
C6724	NCB31CK-103X	C CAPACITOR	0.01uF 16V K
C6901	NBZ0007-107X	SP E CAPACITOR	100uF 4V M
C6902	NCB31CK-104X	C CAPACITOR	0.1uF 16V K
C6903	NCB31CK-104X	C CAPACITOR	0.1uF 16V K
C6904	NCB31CK-104X	C CAPACITOR	0.1uF 16V K
C6905	NCB31CK-104X	C CAPACITOR	0.1uF 16V K
C6906	NCB31CK-104X	C CAPACITOR	0.1uF 16V K
C6907	NCB31CK-104X	C CAPACITOR	0.1uF 16V K
C6908	NCB31CK-104X	C CAPACITOR	0.1uF 16V K
C6909	NCB31CK-104X	C CAPACITOR	0.1uF 16V K
C6910	NCB31CK-104X	C CAPACITOR	0.1uF 16V K
C6911	NCB31CK-104X	C CAPACITOR	0.1uF 16V K
C6912	NCB11AK-106X	C CAPACITOR	10uF 10V K
C6913	NCB31CK-104X	C CAPACITOR	0.1uF 16V K
C6914	NCB31CK-104X	C CAPACITOR	0.1uF 16V K
C6915	NCB31CK-104X	C CAPACITOR	0.1uF 16V K
C6916	NCB31CK-104X	C CAPACITOR	0.1uF 16V K
C6917	NCB31CK-104X	C CAPACITOR	0.1uF 16V K
C6918	NCB31CK-104X	C CAPACITOR	0.1uF 16V K
C6919	NCB31CK-104X	C CAPACITOR	0.1uF 16V K
C6921	NCB11AK-106X	C CAPACITOR	10uF 10V K
C6922	NCB31CK-104X	C CAPACITOR	0.1uF 16V K
C6923	NCB11AK-106X	C CAPACITOR	10uF 10V K
C6924	NCB31CK-104X	C CAPACITOR	0.1uF 16V K
C6925	NCB11AK-106X	C CAPACITOR	10uF 10V K
C6926	NCB31CK-104X	C CAPACITOR	0.1uF 16V K
C6927	NCB11AK-106X	C CAPACITOR	10uF 10V K
C6928	NCB31CK-104X	C CAPACITOR	0.1uF 16V K
C6929	NCB31AK-105X	C CAPACITOR	1uF 10V K
C7039	NCB31HK-102X	C CAPACITOR	1000pF 50V K
C7040	NCB11AK-106X	C CAPACITOR	10uF 10V K
C7044	NCB31CK-104X	C CAPACITOR	0.1uF 16V K
C7051	NCB31CK-104X	C CAPACITOR	0.1uF 16V K
C7052	NCB31CK-104X	C CAPACITOR	0.1uF 16V K
C7053	NCB31CK-104X	C CAPACITOR	0.1uF 16V K
C7054	NCB31CK-104X	C CAPACITOR	0.1uF 16V K
C7055	NCB31CK-104X	C CAPACITOR	0.1uF 16V K
C7056	NCB31CK-104X	C CAPACITOR	0.1uF 16V K
C7057	NCB31CK-104X	C CAPACITOR	0.1uF 16V K
C7058	NCB31CK-104X	C CAPACITOR	0.1uF 16V K
C7059	NCB31CK-104X	C CAPACITOR	0.1uF 16V K
C7060	NCB31CK-104X	C CAPACITOR	0.1uF 16V K
C7061	NCB31CK-104X	C CAPACITOR	0.1uF 16V K
C7062	NCB31CK-104X	C CAPACITOR	0.1uF 16V K
C7063	NCB31CK-104X	C CAPACITOR	0.1uF 16V K
C7064	NCB31CK-104X	C CAPACITOR	0.1uF 16V K
C7065	NCB31CK-104X	C CAPACITOR	0.1uF 16V K
C7066	NCB31CK-104X	C CAPACITOR	0.1uF 16V K
C7067	NCB31CK-104X	C CAPACITOR	0.1uF 16V K
C7068	NCB31CK-104X	C CAPACITOR	0.1uF 16V K
C7073	NCB31CK-104X	C CAPACITOR	0.1uF 16V K
C7202	NCB31CK-104X	C CAPACITOR	0.1uF 16V K
C7203	NCB31CK-104X	C CAPACITOR	0.1uF 16V K
C7204	NCB31CK-104X	C CAPACITOR	0.1uF 16V K

⚠Ref No.	Part No.	Part Name	Description Local
C7205	NCB31CK-104X	C CAPACITOR	0.1uF 16V K
C7206	NCB31CK-104X	C CAPACITOR	0.1uF 16V K
C7207	NCB31CK-104X	C CAPACITOR	0.1uF 16V K
C7208	NCB31CK-104X	C CAPACITOR	0.1uF 16V K
C7209	NCB31CK-104X	C CAPACITOR	0.1uF 16V K
C7211	NCB31HK-102X	C CAPACITOR	1000pF 50V K
C7215	NDC31HJ-330X	C CAPACITOR	33pF 50V J
C7216	NCB31CK-104X	C CAPACITOR	0.1uF 16V K
C7501	NCB31CK-104X	C CAPACITOR	0.1uF 16V K
C7504	NDC31HJ-100X	C CAPACITOR	10pF 50V J
C7505	NDC31HJ-101X	C CAPACITOR	100pF 50V J
C7506	NCB31CK-103X	C CAPACITOR	0.01uF 16V K
C7507	NDC31HJ-100X	C CAPACITOR	10pF 50V J
C7508	NDC31HJ-100X	C CAPACITOR	10pF 50V J
C7510	NDC31HJ-100X	C CAPACITOR	10pF 50V J
C7514	NDC31HJ-100X	C CAPACITOR	10pF 50V J
C7515	NDC31HJ-100X	C CAPACITOR	10pF 50V J
C7516	NDC31HJ-100X	C CAPACITOR	10pF 50V J
C7517	NDC31HJ-100X	C CAPACITOR	10pF 50V J
C7601	NCB11CK-105X	C CAPACITOR	1uF 16V K
C7602	NCB31CK-104X	C CAPACITOR	0.1uF 16V K
C7603	NCB31CK-104X	C CAPACITOR	0.1uF 16V K
C7604	NCB31HK-102X	C CAPACITOR	1000pF 50V K
C7605	NCB31HK-221X	C CAPACITOR	220pF 50V K
C7606	NCB21AK-225X	C CAPACITOR	2.2uF 10V K
C7607	NCB31HK-681X	C CAPACITOR	680pF 50V K
C7608	NCB31CK-104X	C CAPACITOR	0.1uF 16V K
C7609	NCB31HK-681X	C CAPACITOR	680pF 50V K
C7610	NDC31HJ-102X	C CAPACITOR	1000pF 50V J
C7611	NDC31HJ-221X	C CAPACITOR	220pF 50V J
C7612	NCB21AK-225X	C CAPACITOR	2.2uF 10V K
C7615	NCB31CK-104X	C CAPACITOR	0.1uF 16V K
C7616	NCB31CK-104X	C CAPACITOR	0.1uF 16V K
C7617	NCB31CK-104X	C CAPACITOR	0.1uF 16V K
C7618	NCF11CZ-475X	C CAPACITOR	4.7uF 16V Z
C7619	NCB11AK-106X	C CAPACITOR	10uF 10V K
C7620	NCF11CZ-475X	C CAPACITOR	4.7uF 16V Z
C7621	NCB11AK-106X	C CAPACITOR	10uF 10V K
C7622	NCB31CK-104X	C CAPACITOR	0.1uF 16V K
C7623	NCB31CK-104X	C CAPACITOR	0.1uF 16V K
C7624	NCB31CK-104X	C CAPACITOR	0.1uF 16V K
C7625	NCB31CK-104X	C CAPACITOR	0.1uF 16V K
C7626	NCB31CK-104X	C CAPACITOR	0.1uF 16V K
C7629	NCB11AK-106X	C CAPACITOR	10uF 10V K
C7631	NCB31AK-224X	C CAPACITOR	0.22uF 10V K
C7632	NCB31AK-224X	C CAPACITOR	0.22uF 10V K
C7633	NDC31HJ-151X	C CAPACITOR	150pF 50V J
C9001	NDC31HJ-102X	C CAPACITOR	1000pF 50V J
C9002	NCJ41EK-106X-U	C CAPACITOR	10mF 25V K
C9003	NCB31EK-104X	C CAPACITOR	0.1uF 25V K
C9004	NCB31HK-103X	C CAPACITOR	0.01uF 50V K
C9005	NCJ41CK-226X-U	C CAPACITOR	22mF 16V K
C9006	NDC31HJ-120X	C CAPACITOR	12pF 50V J
C9007	NCB31HK-103X	C CAPACITOR	0.01uF 50V K
C9010	NCJ41CK-226X-U	C CAPACITOR	22mF 16V K
C9101	NCB11CK-475X	C CAPACITOR	4.7uF 16V K
C9103	NCB11CK-225X	C CAPACITOR	2.2uF 16V K
C9201	NDC31HJ-102X	C CAPACITOR	1000pF 50V J
C9202	NCJ41EK-106X-U	C CAPACITOR	10mF 25V K
C9204	NCB31HK-103X	C CAPACITOR	0.01uF 50V K
C9205	NCJ41CK-226X-U	C CAPACITOR	22mF 16V K
C9206	NDC31HJ-120X	C CAPACITOR	12pF 50V J
C9207	NCB31HK-153X	C CAPACITOR	0.015uF 50V K
C9208	NCJ41CK-226X-U	C CAPACITOR	22mF 16V K
C9209	NCB31HK-102X	C CAPACITOR	1000pF 50V K
C9211	NCB31CK-473X	C CAPACITOR	0.047uF 16V K
C9301	NDC31HJ-101X	C CAPACITOR	100pF 50V J
C9302	NCB11CK-475X	C CAPACITOR	4.7uF 16V K
C9303	NCB31HK-103X	C CAPACITOR	0.01uF 50V K
C9304	NCB11CK-475X	C CAPACITOR	4.7uF 16V K
C9306	NRSA63J-0R0X	MG RESISTOR	0Ω 1/16W J
C9313	NCB31HK-102X	C CAPACITOR	1000pF 50V K
C9314	NCB31HK-102X	C CAPACITOR	1000pF 50V K
R6002	NRSA63J-0R0X	MG RESISTOR	0Ω 1/16W J
R6003	NRSA63J-0R0X	MG RESISTOR	0Ω 1/16W J
R6006	NRSA63J-0R0X	MG RESISTOR	0Ω 1/16W J
R6008	NRSA63J-0R0X	MG RESISTOR	0Ω 1/16W J
R6009	NRSA63J-220X	MG RESISTOR	22Ω 1/16W J
R6014	NRSA63J-0R0X	MG RESISTOR	0Ω 1/16W J
R6017	NRSA63J-0R0X	MG RESISTOR	0Ω 1/16W J
R6018	NRSA63J-0R0X	MG RESISTOR	0Ω 1/16W J
R6019	NRSA63J-0R0X	MG RESISTOR	0Ω 1/16W J
R6020	NRSA63J-0R0X	MG RESISTOR	0Ω 1/16W J
R6026	NRSA63J-0R0X	MG RESISTOR	0Ω 1/16W J
R6028	NRSA63J-0R0X	MG RESISTOR	0Ω 1/16W J
R6031	NRSA63J-0R0X	MG RESISTOR	0Ω 1/16W J
R6032	NRSA63D-470X	MG RESISTOR	47Ω 1/16W D
R6033	NRSA63J-0R0X	MG RESISTOR	0Ω 1/16W J
R6034	NRSA63J-0R0X	MG RESISTOR	0Ω 1/16W J

⚠Ref No.	Part No.	Part Name	Description Local
R6037	NRSA63D-330X	MG RESISTOR	33Ω 1/16W D
R6055	NRS181J-0R0X	MG RESISTOR	0Ω 1/8W J
R6057	NRSA63J-220X	MG RESISTOR	22Ω 1/16W J
R6058	NRSA63J-220X	MG RESISTOR	22Ω 1/16W J
R6059	NRSA63J-101X	MG RESISTOR	100Ω 1/16W J
R6060	NRSA63J-0R0X	MG RESISTOR	0Ω 1/16W J
R6061	NRSA63J-0R0X	MG RESISTOR	0Ω 1/16W J
R6064	NRSA63J-220X	MG RESISTOR	22Ω 1/16W J
R6065	NRSA63J-220X	MG RESISTOR	22Ω 1/16W J
R6066	NRSA63J-220X	MG RESISTOR	22Ω 1/16W J
R6068	NRZ0080-0R0X	NET RESISTOR	0Ω 1/16W J
R6072	NRSA63J-0R0X	MG RESISTOR	0Ω 1/16W J
R6073	NRSA63J-0R0X	MG RESISTOR	0Ω 1/16W J
R6074	NRSA63J-0R0X	MG RESISTOR	0Ω 1/16W J
R6075	NRSA63J-0R0X	MG RESISTOR	0Ω 1/16W J
R6080	NRSA63J-0R0X	MG RESISTOR	0Ω 1/16W J
R6101	NRSA63J-220X	MG RESISTOR	22Ω 1/16W J
R6102	NRSA63J-220X	MG RESISTOR	22Ω 1/16W J
R6103	NRSA63J-220X	MG RESISTOR	22Ω 1/16W J
R6104	NRSA63J-220X	MG RESISTOR	22Ω 1/16W J
R6105	NRSA63J-220X	MG RESISTOR	22Ω 1/16W J
R6106	NRSA63J-220X	MG RESISTOR	22Ω 1/16W J
R6107	NRSA63J-100X	MG RESISTOR	10Ω 1/16W J
R6108	NRSA63J-100X	MG RESISTOR	10Ω 1/16W J
R6109	NRSA63J-220X	MG RESISTOR	22Ω 1/16W J
R6110	NRSA63J-220X	MG RESISTOR	22Ω 1/16W J
R6111	NRSA63J-220X	MG RESISTOR	22Ω 1/16W J
R6112	NRSA63J-470X	MG RESISTOR	47Ω 1/16W J
R6113	NRSA63J-470X	MG RESISTOR	47Ω 1/16W J
R6114	NRSA63J-470X	MG RESISTOR	47Ω 1/16W J
R6115	NRSA63J-470X	MG RESISTOR	47Ω 1/16W J
R6116	NRSA63J-470X	MG RESISTOR	47Ω 1/16W J
R6117	NRSA63J-470X	MG RESISTOR	47Ω 1/16W J
R6118	NRSA63J-470X	MG RESISTOR	47Ω 1/16W J
R6119	NRSA63J-470X	MG RESISTOR	47Ω 1/16W J
R6120	NRSA63J-470X	MG RESISTOR	47Ω 1/16W J
R6121	NRSA63J-470X	MG RESISTOR	47Ω 1/16W J
R6122	NRSA63J-470X	MG RESISTOR	47Ω 1/16W J
R6127	NRSA63J-1R5X	MG RESISTOR	1.5Ω 1/16W J
R6141	NRSA63J-0R0X	MG RESISTOR	0Ω 1/16W J
R6142	NRSA63J-0R0X	MG RESISTOR	0Ω 1/16W J
R6201	NRSA63J-0R0X	MG RESISTOR	0Ω 1/16W J
R6202	NRSA63J-0R0X	MG RESISTOR	0Ω 1/16W J
R6203	NRSA63J-0R0X	MG RESISTOR	0Ω 1/16W J
R6204	NRSA63J-0R0X	MG RESISTOR	0Ω 1/16W J
R6205	NRSA63J-332X	MG RESISTOR	3.3kΩ 1/16W J
R6207	NRSA63J-0R0X	MG RESISTOR	0Ω 1/16W J
R6209	NRSA63J-0R0X	MG RESISTOR	0Ω 1/16W J
R6214	NRSA63J-0R0X	MG RESISTOR	0Ω 1/16W J
R6215	NRSA63J-0R0X	MG RESISTOR	0Ω 1/16W J
R6216	NRSA63J-0R0X	MG RESISTOR	0Ω 1/16W J
R6217	NRSA63J-0R0X	MG RESISTOR	0Ω 1/16W J
R6220	NRSA63J-682X	MG RESISTOR	6.8kΩ 1/16W J
R6223	NRSA63J-0R0X	MG RESISTOR	0Ω 1/16W J
R6224	NRSA63J-0R0X	MG RESISTOR	0Ω 1/16W J
R6225	NRSA63J-0R0X	MG RESISTOR	0Ω 1/16W J
R6226	NRSA63J-0R0X	MG RESISTOR	0Ω 1/16W J
R6227	NRSA63J-391X	MG RESISTOR	390Ω 1/16W J
R6228	NRSA63J-332X	MG RESISTOR	3.3kΩ 1/16W J
R6229	NRSA63J-682X	MG RESISTOR	6.8kΩ 1/16W J
R6230	NRSA63J-0R0X	MG RESISTOR	0Ω 1/16W J
R6231	NRSA63J-0R0X	MG RESISTOR	0Ω 1/16W J
R6232	NRSA63J-0R0X	MG RESISTOR	0Ω 1/16W J
R6233	NRSA63J-0R0X	MG RESISTOR	0Ω 1/16W J
R6234	NRSA63J-391X	MG RESISTOR	390Ω 1/16W J
R6235	NRSA63J-101X	MG RESISTOR	100Ω 1/16W J
R6236	NRSA63J-331X	MG RESISTOR	330Ω 1/16W J
R6237	NRSA63J-332X	MG RESISTOR	3.3kΩ 1/16W J
R6238	NRSA63J-101X	MG RESISTOR	100Ω 1/16W J
R6239	NRSA63J-331X	MG RESISTOR	330Ω 1/16W J
R6240	NRSA63J-682X	MG RESISTOR	6.8kΩ 1/16W J
R6241	NRSA63J-101X	MG RESISTOR	100Ω 1/16W J
R6242	NRSA63J-331X	MG RESISTOR	330Ω 1/16W J
R6243	NRSA63J-102X	MG RESISTOR	1kΩ 1/16W J
R6244	NRSA63J-101X	MG RESISTOR	100Ω 1/16W J
R6245	NRSA63J-331X	MG RESISTOR	330Ω 1/16W J
R6246	NRSA63J-332X	MG RESISTOR	3.3kΩ 1/16W J
R6247	NRSA63J-682X	MG RESISTOR	6.8kΩ 1/16W J
R6248	NRSA63J-473X	MG RESISTOR	47kΩ 1/16W J
R6249	NRSA63J-333X	MG RESISTOR	33kΩ 1/16W J
R6251	NRSA63J-0R0X	MG RESISTOR	0Ω 1/16W J
R6252	NRSA63J-0R0X	MG RESISTOR	0Ω 1/16W J
R6253	NRSA63J-222X	MG RESISTOR	2.2kΩ 1/16W J
R6254	NRSA63J-151X	MG RESISTOR	150Ω 1/16W J
R6255	NRSA63J-472X	MG RESISTOR	4.7kΩ 1/16W J
R6256	NRSA63J-0R0X	MG RESISTOR	0Ω 1/16W J
R6257	NRSA63J-222X	MG RESISTOR	2.2kΩ 1/16W J
R6258	NRSA63J-151X	MG RESISTOR	150Ω 1/16W J
R6259	NRSA63J-472X	MG RESISTOR	4.7kΩ 1/16W J
R6260	NRSA63J-0R0X	MG RESISTOR	0Ω 1/16W J

⚠Ref No.	Part No.	Part Name	Description Local
R6261	NRSA63J-222X	MG RESISTOR	2.2kΩ 1/16W J
R6262	NRSA63J-151X	MG RESISTOR	150Ω 1/16W J
R6263	NRSA63J-472X	MG RESISTOR	4.7kΩ 1/16W J
R6264	NRSA63J-0R0X	MG RESISTOR	0Ω 1/16W J
R6265	NRSA63J-103X	MG RESISTOR	10kΩ 1/16W J
R6266	NRSA63J-221X	MG RESISTOR	220Ω 1/16W J
R6267	NRSA63J-472X	MG RESISTOR	4.7kΩ 1/16W J
R6268	NRSA63D-242X	MG RESISTOR	2.4kΩ 1/16W D
R6269	NRSA63D-242X	MG RESISTOR	2.4kΩ 1/16W D
R6270	NRSA63D-242X	MG RESISTOR	2.4kΩ 1/16W D
R6271	NRSA63D-242X	MG RESISTOR	2.4kΩ 1/16W D
R6273	NRSA63J-0R0X	MG RESISTOR	0Ω 1/16W J
R6274	NRSA63J-220X	MG RESISTOR	22Ω 1/16W J
R6275	NRSA63J-0R0X	MG RESISTOR	0Ω 1/16W J
R6276	NRSA63J-0R0X	MG RESISTOR	0Ω 1/16W J
R6277	NRSA63J-391X	MG RESISTOR	390Ω 1/16W J
R6279	NRSA63J-0R0X	MG RESISTOR	0Ω 1/16W J
R6280	NRSA63J-331X	MG RESISTOR	330Ω 1/16W J
R6281	NRSA63J-101X	MG RESISTOR	100Ω 1/16W J
R6282	NRSA63J-331X	MG RESISTOR	330Ω 1/16W J
R6283	NRSA63J-101X	MG RESISTOR	100Ω 1/16W J
R6284	NRSA63J-0R0X	MG RESISTOR	0Ω 1/16W J
R6285	NRSA63J-0R0X	MG RESISTOR	0Ω 1/16W J
R6286	NRSA63J-391X	MG RESISTOR	390Ω 1/16W J
R6287	NRSA63J-391X	MG RESISTOR	390Ω 1/16W J
R6288	NRSA63J-391X	MG RESISTOR	390Ω 1/16W J
R6289	NRSA63J-102X	MG RESISTOR	1kΩ 1/16W J
R6290	NRSA63J-0R0X	MG RESISTOR	0Ω 1/16W J
R6291	NRSA63J-473X	MG RESISTOR	47kΩ 1/16W J
R6292	NRSA63J-473X	MG RESISTOR	47kΩ 1/16W J
R6300	NRSA63J-0R0X	MG RESISTOR	0Ω 1/16W J
R6302	NRSA63J-0R0X	MG RESISTOR	0Ω 1/16W J
R6305	NRSA63J-0R0X	MG RESISTOR	0Ω 1/16W J
R6332	NRSA63J-0R0X	MG RESISTOR	0Ω 1/16W J
R6333	NRSA63J-0R0X	MG RESISTOR	0Ω 1/16W J
R6338	NRSA63J-0R0X	MG RESISTOR	0Ω 1/16W J
R6339	NRSA63J-0R0X	MG RESISTOR	0Ω 1/16W J
R6501	NRSA63J-101X	MG RESISTOR	100Ω 1/16W J
R6502	NRSA63J-101X	MG RESISTOR	100Ω 1/16W J
R6503	NRSA63J-0R0X	MG RESISTOR	0Ω 1/16W J
R6505	NRSA63J-102X	MG RESISTOR	1kΩ 1/16W J
R6508	NRSA63J-0R0X	MG RESISTOR	0Ω 1/16W J
R6509	NRSA63J-102X	MG RESISTOR	1kΩ 1/16W J
R6511	NRSA63J-102X	MG RESISTOR	1kΩ 1/16W J
R6514	NRSA63J-0R0X	MG RESISTOR	0Ω 1/16W J
R6534	NRSA63J-0R0X	MG RESISTOR	0Ω 1/16W J
R6568	NRSA63J-0R0X	MG RESISTOR	0Ω 1/16W J
R6571	NRSA63J-0R0X	MG RESISTOR	0Ω 1/16W J
R6572	NRSA63J-0R0X	MG RESISTOR	0Ω 1/16W J
R6573	NRSA63J-0R0X	MG RESISTOR	0Ω 1/16W J
R6574	NRSA63J-0R0X	MG RESISTOR	0Ω 1/16W J
R6575	NRSA63J-0R0X	MG RESISTOR	0Ω 1/16W J
R6576	NRSA63J-0R0X	MG RESISTOR	0Ω 1/16W J
R6598	NRSA63J-104X	MG RESISTOR	100kΩ 1/16W J
R6607	NRSA63J-101X	MG RESISTOR	100Ω 1/16W J
R6609	NRSA63J-101X	MG RESISTOR	100Ω 1/16W J
R6611	NRSA63J-102X	MG RESISTOR	1kΩ 1/16W J
R6707	NRSA63J-0R0X	MG RESISTOR	0Ω 1/16W J
R6712	NRSA63J-0R0X	MG RESISTOR	0Ω 1/16W J
R6713	NRSA63J-0R0X	MG RESISTOR	0Ω 1/16W J
R6730	NRSA63J-0R0X	MG RESISTOR	0Ω 1/16W J
R6731	NRSA63J-0R0X	MG RESISTOR	0Ω 1/16W J
R6732	NRSA63J-0R0X	MG RESISTOR	0Ω 1/16W J
R6921	NRSA63J-0R0X	MG RESISTOR	0Ω 1/16W J
R6923	NRSA63J-0R0X	MG RESISTOR	0Ω 1/16W J
R6924	NRSA63J-0R0X	MG RESISTOR	0Ω 1/16W J
R6943	NRSA63J-150X	MG RESISTOR	15Ω 1/16W J
R6946	NRSA63D-220X	MG RESISTOR	22Ω 1/16W D
R6953	NRSA63J-0R0X	MG RESISTOR	0Ω 1/16W J
R7030	NRSA63J-0R0X	MG RESISTOR	0Ω 1/16W J
R7031	NRSA63J-0R0X	MG RESISTOR	0Ω 1/16W J
R7032	NRSA63J-151X	MG RESISTOR	150Ω 1/16W J
R7033	NRSA63J-0R0X	MG RESISTOR	0Ω 1/16W J
R7034	NRSA63J-0R0X	MG RESISTOR	0Ω 1/16W J
R7040	NRSA63J-0R0X	MG RESISTOR	0Ω 1/16W J
R7041	NRSA63J-223X	MG RESISTOR	22kΩ 1/16W J
R7047	NRSA63J-0R0X	MG RESISTOR	0Ω 1/16W J
R7049	NRSA63J-0R0X	MG RESISTOR	0Ω 1/16W J
R7051	NRSA63J-0R0X	MG RESISTOR	0Ω 1/16W J
R7052	NRSA63J-473X	MG RESISTOR	47kΩ 1/16W J
R7054	NRSA63J-0R0X	MG RESISTOR	0Ω 1/16W J
R7055	NRSA63J-0R0X	MG RESISTOR	0Ω 1/16W J
R7056	NRSA63J-0R0X	MG RESISTOR	0Ω 1/16W J
R7057	NRSA63J-0R0X	MG RESISTOR	0Ω 1/16W J
R7058	NRSA63J-0R0X	MG RESISTOR	0Ω 1/16W J
R7059	NRSA63J-0R0X	MG RESISTOR	0Ω 1/16W J
R7061	NRSA63J-0R0X	MG RESISTOR	0Ω 1/16W J
R7062	NRSA63J-0R0X	MG RESISTOR	0Ω 1/16W J
R7063	NRSA63J-0R0X	MG RESISTOR	0Ω 1/16W J
R7064	NRSA63J-103X	MG RESISTOR	10kΩ 1/16W J
R7065	NRSA63J-103X	MG RESISTOR	10kΩ 1/16W J
R7066	NRSA63J-562X	MG RESISTOR	5.6kΩ 1/16W J
R7067	NRSA63J-562X	MG RESISTOR	5.6kΩ 1/16W J
R7068	NRSA63J-0R0X	MG RESISTOR	0Ω 1/16W J
R7069	NRSA63J-0R0X	MG RESISTOR	0Ω 1/16W J
R7070	NRSA63J-0R0X	MG RESISTOR	0Ω 1/16W J
R7071	NRSA63J-0R0X	MG RESISTOR	0Ω 1/16W J
R7077	NRSA63J-331X	MG RESISTOR	330Ω 1/16W J
R7078	NRSA63J-331X	MG RESISTOR	330Ω 1/16W J
R7081	NRSA63J-473X	MG RESISTOR	47kΩ 1/16W J
R7084	NRSA63J-221X	MG RESISTOR	220Ω 1/16W J
R7085	NRSA63J-221X	MG RESISTOR	220Ω 1/16W J
R7086	NRSA63J-0R0X	MG RESISTOR	0Ω 1/16W J
R7087	NRSA63J-0R0X	MG RESISTOR	0Ω 1/16W J
R7088	NRSA63J-0R0X	MG RESISTOR	0Ω 1/16W J
R7089	NRSA63J-0R0X	MG RESISTOR	0Ω 1/16W J
R7090	NRSA63J-0R0X	MG RESISTOR	0Ω 1/16W J
R7091	NRSA63J-0R0X	MG RESISTOR	0Ω 1/16W J
R7092	NRSA63J-101X	MG RESISTOR	100Ω 1/16W J
R7093	NRSA63J-101X	MG RESISTOR	100Ω 1/16W J
R7094	NRSA63J-101X	MG RESISTOR	100Ω 1/16W J
R7095	NRSA63J-0R0X	MG RESISTOR	0Ω 1/16W J
R7097	NRSA63J-0R0X	MG RESISTOR	0Ω 1/16W J
R7098	NRSA63J-0R0X	MG RESISTOR	0Ω 1/16W J
R7099	NRSA63J-0R0X	MG RESISTOR	0Ω 1/16W J
R7100	NRSA63J-0R0X	MG RESISTOR	0Ω 1/16W J
R7103	NRSA63J-0R0X	MG RESISTOR	0Ω 1/16W J
R7106	NRSA63J-0R0X	MG RESISTOR	0Ω 1/16W J
R7110	NRSA63J-0R0X	MG RESISTOR	0Ω 1/16W J
R7113	NRSA63J-0R0X	MG RESISTOR	0Ω 1/16W J
R7123	NRSA63J-0R0X	MG RESISTOR	0Ω 1/16W J
R7124	NRSA63J-0R0X	MG RESISTOR	0Ω 1/16W J
R7128	NRSA63J-0R0X	MG RESISTOR	0Ω 1/16W J
R7170	NRSA63J-0R0X	MG RESISTOR	0Ω 1/16W J
R7171	NRSA63J-0R0X	MG RESISTOR	0Ω 1/16W J
R7172	NRSA63J-0R0X	MG RESISTOR	0Ω 1/16W J
R7173	NRSA63J-0R0X	MG RESISTOR	0Ω 1/16W J
R7174	NRSA63J-473X	MG RESISTOR	47kΩ 1/16W J
R7175	NRSA63J-0R0X	MG RESISTOR	0Ω 1/16W J
R7176	NRSA63J-0R0X	MG RESISTOR	0Ω 1/16W J
R7177	NRSA63J-0R0X	MG RESISTOR	0Ω 1/16W J
R7178	NRSA63J-0R0X	MG RESISTOR	0Ω 1/16W J
R7179	NRSA63J-0R0X	MG RESISTOR	0Ω 1/16W J
R7184	NRSA63J-0R0X	MG RESISTOR	0Ω 1/16W J
R7186	NCB31HK-103X	C CAPACITOR	0.01uF 50V K
R7187	NRSA63J-0R0X	MG RESISTOR	0Ω 1/16W J
R7192	NRSA63J-0R0X	MG RESISTOR	0Ω 1/16W J
R7201	NRSA63J-473X	MG RESISTOR	47kΩ 1/16W J
R7202	NRSA63J-473X	MG RESISTOR	47kΩ 1/16W J
R7203	NRSA63J-473X	MG RESISTOR	47kΩ 1/16W J
R7207	NRSA63J-101X	MG RESISTOR	100Ω 1/16W J
R7208	NRSA63J-0R0X	MG RESISTOR	0Ω 1/16W J
R7211	NRSA63J-0R0X	MG RESISTOR	0Ω 1/16W J
R7214	NRSA63J-0R0X	MG RESISTOR	0Ω 1/16W J
R7215	NRSA63J-473X	MG RESISTOR	47kΩ 1/16W J
R7216	NRSA63J-473X	MG RESISTOR	47kΩ 1/16W J
R7217	NRSA63J-473X	MG RESISTOR	47kΩ 1/16W J
R7221	NRSA63J-0R0X	MG RESISTOR	0Ω 1/16W J
R7223	NRSA63J-473X	MG RESISTOR	47kΩ 1/16W J
R7224	NRSA63J-473X	MG RESISTOR	47kΩ 1/16W J
R7225	NRSA63J-473X	MG RESISTOR	47kΩ 1/16W J
R7239	NRSA63J-103X	MG RESISTOR	10kΩ 1/16W J
R7240	NQR0599-003X	FERRITE BEADS	
R7349	NRSA63J-103X	MG RESISTOR	10kΩ 1/16W J
R7350	NRSA63J-103X	MG RESISTOR	10kΩ 1/16W J
R7351	NRSA63J-103X	MG RESISTOR	10kΩ 1/16W J
R7504	NRSA63J-104X	MG RESISTOR	100kΩ 1/16W J
R7505	NRSA63J-103X	MG RESISTOR	10kΩ 1/16W J
R7512	NRSA63J-0R0X	MG RESISTOR	0Ω 1/16W J
R7513	NRSA63J-0R0X	MG RESISTOR	0Ω 1/16W J
R7514	NRSA63J-0R0X	MG RESISTOR	0Ω 1/16W J
R7515	NRSA63J-102X	MG RESISTOR	1kΩ 1/16W J
R7601	NRSA63J-103X	MG RESISTOR	10kΩ 1/16W J
R7602	NRSA63J-103X	MG RESISTOR	10kΩ 1/16W J
R7603	NRSA63J-0R0X	MG RESISTOR	0Ω 1/16W J
R7604	NRSA63J-0R0X	MG RESISTOR	0Ω 1/16W J
R7605	NRSA63J-471X	MG RESISTOR	470Ω 1/16W J
R7606	NRSA63J-105X	MG RESISTOR	1MΩ 1/16W J
R7607	NRSA63J-682X	MG RESISTOR	6.8kΩ 1/16W J
R7608	NRSA63J-105X	MG RESISTOR	1MΩ 1/16W J
R7609	NRSA63J-0R0X	MG RESISTOR	0Ω 1/16W J
R7610	NRSA63J-0R0X	MG RESISTOR	0Ω 1/16W J
R7611	NRSA63J-102X	MG RESISTOR	1kΩ 1/16W J
R7612	NRSA63J-471X	MG RESISTOR	470Ω 1/16W J
R7613	NRSA63J-102X	MG RESISTOR	1kΩ 1/16W J
R7614	NRSA63J-0R0X	MG RESISTOR	0Ω 1/16W J
R7615	NRSA63J-0R0X	MG RESISTOR	0Ω 1/16W J
R7616	NRSA63J-0R0X	MG RESISTOR	0Ω 1/16W J
R7618	NRSA63J-0R0X	MG RESISTOR	0Ω 1/16W J
R7619	NRSA63J-0R0X	MG RESISTOR	0Ω 1/16W J

⚠Ref No.	Part No.	Part Name	Description Local
R7620	NRSA63J-102X	MG RESISTOR	1kΩ 1/16W J
R7622	NRSA63J-0R0X	MG RESISTOR	0Ω 1/16W J
R7623	NRSA63J-0R0X	MG RESISTOR	0Ω 1/16W J
R7624	NRSA63J-0R0X	MG RESISTOR	0Ω 1/16W J
R7625	NRSA63J-0R0X	MG RESISTOR	0Ω 1/16W J
R7626	NRSA63J-0R0X	MG RESISTOR	0Ω 1/16W J
R7627	NRSA63J-0R0X	MG RESISTOR	0Ω 1/16W J
R7628	NRSA63J-333X	MG RESISTOR	33kΩ 1/16W J
R7631	NRSA63J-821X	MG RESISTOR	820Ω 1/16W J
R7632	NRSA63J-222X	MG RESISTOR	2.2kΩ 1/16W J
R7634	NRSA63J-821X	MG RESISTOR	820Ω 1/16W J
R7635	NRSA63J-222X	MG RESISTOR	2.2kΩ 1/16W J
R7636	NRSA63J-102X	MG RESISTOR	1kΩ 1/16W J
R7637	NRSA63J-102X	MG RESISTOR	1kΩ 1/16W J
R7639	NRSA63J-103X	MG RESISTOR	10kΩ 1/16W J
R7640	NRSA63J-103X	MG RESISTOR	10kΩ 1/16W J
R7643	NRSA63J-0R0X	MG RESISTOR	0Ω 1/16W J
R7644	NRSA63J-0R0X	MG RESISTOR	0Ω 1/16W J
R7646	NRSA63J-0R0X	MG RESISTOR	0Ω 1/16W J
R7649	NRSA63J-103X	MG RESISTOR	10kΩ 1/16W J
R7652	NRSA63J-0R0X	MG RESISTOR	0Ω 1/16W J
R7653	NRSA63J-0R0X	MG RESISTOR	0Ω 1/16W J
R7658	NRSA63J-103X	MG RESISTOR	10kΩ 1/16W J
R7659	NRSA63J-560X	MG RESISTOR	56Ω 1/16W J
R8796	NRSA63J-0R0X	MG RESISTOR	0Ω 1/16W J
R8797	NRSA63J-0R0X	MG RESISTOR	0Ω 1/16W J
R8798	NRSA63J-0R0X	MG RESISTOR	0Ω 1/16W J
R8799	NRSA63J-0R0X	MG RESISTOR	0Ω 1/16W J
R9001	NRSA63J-473X	MG RESISTOR	47kΩ 1/16W J
R9002	NRSA02J-0R0X	MG RESISTOR	0Ω 1/10W J
R9003	NRSA63D-273X	MG RESISTOR	27kΩ 1/16W D
R9004	NRSA63J-684X	MG RESISTOR	680kΩ 1/16W J
R9005	NRSA63D-103X	MG RESISTOR	10kΩ 1/16W D
R9006	NRSA63J-512X	MG RESISTOR	5.1kΩ 1/16W J
R9007	NRSA02J-0R0X	MG RESISTOR	0Ω 1/10W J
R9008	NRSA63J-0R0X	MG RESISTOR	0Ω 1/16W J
R9201	NRSA63J-473X	MG RESISTOR	47kΩ 1/16W J
R9202	NRSA02J-0R0X	MG RESISTOR	0Ω 1/10W J
R9203	NRSA63D-302X	MG RESISTOR	3kΩ 1/16W D
R9205	NRSA63D-103X	MG RESISTOR	10kΩ 1/16W D
R9206	NRSA63J-332X	MG RESISTOR	3.3kΩ 1/16W J
R9207	NRSA02J-0R0X	MG RESISTOR	0Ω 1/10W J
R9209	NRSA63J-0R0X	MG RESISTOR	0Ω 1/16W J
R9302	NRSA02J-0R0X	MG RESISTOR	0Ω 1/10W J
R9306	NRSA02J-0R0X	MG RESISTOR	0Ω 1/10W J
R9308	NRSA63J-0R0X	MG RESISTOR	0Ω 1/16W J
R9510	NRSA63J-104X	MG RESISTOR	100kΩ 1/16W J
RA6001	NRZ0080-0R0X	NET RESISTOR	0Ω 1/16W J
RA6002	NRZ0034-0R0W	NET RESISTOR	0Ω 1/32W J x4
RA6007	NRZ0080-0R0X	NET RESISTOR	0Ω 1/16W J
RA6008	NRZ0080-0R0X	NET RESISTOR	0Ω 1/16W J
RA6009	NRZ0034-0R0W	NET RESISTOR	0Ω 1/32W J x4
RA6010	NRZ0034-0R0W	NET RESISTOR	0Ω 1/32W J x4
RA6011	NRZ0080-0R0X	NET RESISTOR	0Ω 1/16W J
RA6101	NRZ0040-220X	NET RESISTOR	22Ω 1/16W J x4
RA6102	NRZ0080-220X	NET RESISTOR	22Ω 1/16W J
RA6103	NRZ0040-220X	NET RESISTOR	22Ω 1/16W J x4
RA6104	NRZ0040-220X	NET RESISTOR	22Ω 1/16W J x4
RA6105	NRZ0080-220X	NET RESISTOR	22Ω 1/16W J
RA6106	NRZ0040-220X	NET RESISTOR	22Ω 1/16W J x4
RA6107	NRZ0080-220X	NET RESISTOR	22Ω 1/16W J
RA6108	NRZ0080-220X	NET RESISTOR	22Ω 1/16W J
RA6109	NRZ0040-470X	NET RESISTOR	47Ω 1/16W J x4
RA6110	NRZ0080-470X	NET RESISTOR	47Ω 1/16W J
RA6111	NRZ0040-470X	NET RESISTOR	47Ω 1/16W J x4
RA6112	NRZ0040-470X	NET RESISTOR	47Ω 1/16W J x4
RA6113	NRZ0080-470X	NET RESISTOR	47Ω 1/16W J
RA6114	NRZ0040-470X	NET RESISTOR	47Ω 1/16W J x4
RA6115	NRZ0080-470X	NET RESISTOR	47Ω 1/16W J
RA6116	NRZ0080-470X	NET RESISTOR	47Ω 1/16W J
RA6501	NRZ0034-0R0W	NET RESISTOR	0Ω 1/32W J x4
RA6502	NRZ0034-0R0W	NET RESISTOR	0Ω 1/32W J x4
RA6503	NRZ0034-0R0W	NET RESISTOR	0Ω 1/32W J x4
RA6504	NRZ0080-0R0X	NET RESISTOR	0Ω 1/16W J
RA6505	NRZ0080-0R0X	NET RESISTOR	0Ω 1/16W J
RA6506	NRZ0080-0R0X	NET RESISTOR	0Ω 1/16W J
RA6541	NRZ0033-0R0W	NET RESISTOR	0Ω
RA6542	NRZ0080-0R0X	NET RESISTOR	0Ω 1/16W J
RA6543	NRZ0033-0R0W	NET RESISTOR	0Ω
RA6544	NRZ0080-0R0X	NET RESISTOR	0Ω 1/16W J
RA6545	NRZ0033-0R0W	NET RESISTOR	0Ω
RA6546	NRZ0080-0R0X	NET RESISTOR	0Ω 1/16W J
RA7202	NRZ0080-473X	NET RESISTOR	47kΩ
RA7203	NRZ0080-473X	NET RESISTOR	47kΩ
RA7204	NRZ0080-473X	NET RESISTOR	47kΩ
RA7205	NRZ0080-473X	NET RESISTOR	47kΩ
RA7503	NQR0271-004X	EMI FILTER	
RA7601	NRZ0034-0R0W	NET RESISTOR	0Ω 1/32W J x4
RA7602	NRZ0034-0R0W	NET RESISTOR	0Ω 1/32W J x4
RA7603	NRZ0034-0R0W	NET RESISTOR	0Ω 1/32W J x4
RA7605	NRZ0034-0R0W	NET RESISTOR	0Ω 1/32W J x4
RA7606	NRZ0034-101W	NET RESISTOR	100Ω 1/32W J x4
L6051	NRSA02J-0R0X	MG RESISTOR	0Ω 1/10W J
L6101	NRSA02J-0R0X	MG RESISTOR	0Ω 1/10W J
L6102	NQLE3GK-220X	COIL	22uH K
L6103	NQLE3GK-220X	COIL	22uH K
L6115	NQR0499-001X	FERRITE BEADS	
L6254	NRSA02J-0R0X	MG RESISTOR	0Ω 1/10W J
L6265	NQR0499-001X	FERRITE BEADS	
L6266	NQR0499-001X	FERRITE BEADS	
L6511	NRZ0034-0R0W	NET RESISTOR	0Ω 1/32W J x4
L6512	NRZ0034-0R0W	NET RESISTOR	0Ω 1/32W J x4
L6513	NRZ0034-0R0W	NET RESISTOR	0Ω 1/32W J x4
L6514	NRZ0034-0R0W	NET RESISTOR	0Ω 1/32W J x4
L6515	NRZ0034-0R0W	NET RESISTOR	0Ω 1/32W J x4
L6516	NRZ0034-0R0W	NET RESISTOR	0Ω 1/32W J x4
L6531	NQR0199-007X	FERRITE BEADS	
L6701	NQR0413-003X	FERRITE BEADS	
L6911	NQR0499-001X	FERRITE BEADS	
L6912	NQR0499-001X	FERRITE BEADS	
L6922	NQLE3GK-220X	COIL	22uH K
L6924	NQLE3GK-220X	COIL	22uH K
L6925	NQLE3GK-220X	COIL	22uH K
L6931	NQR0499-001X	FERRITE BEADS	
L7501	NRSA63J-0R0X	MG RESISTOR	0Ω 1/16W J
L7502	NRSA63J-0R0X	MG RESISTOR	0Ω 1/16W J
L9001	NQLC8CM-150X	COIL	15uH M
L9201	NQLC8CM-150X	COIL	15uH M
L9204	NQR0562-014X	CHOKE COIL	
L9306	NRSA02J-0R0X	MG RESISTOR	0Ω 1/10W J
232C	WJJ0654-001A-E	E-SI C WIRE C-C	
CN011	QGF0508F4-50X	CONNECTOR	FFC/FPC (1-50)
CN012	QGF0508F4-40X	CONNECTOR	FFC/FPC (1-40)
CN110	QGB0603L1-B0	CONNECTOR	B-B (1-110)
J7601	QNZ0587-001	D CONNECTOR	RS-232C
J8501	NNZ0117-001	CONNECTOR	DIGITAL-IN-2
J8502	NNZ0117-001	CONNECTOR	DIGITAL-IN-1
K6052	NQR0489-002X	FERRITE BEADS	
K6250	NRSA02J-0R0X	MG RESISTOR	0Ω 1/10W J
K6268	NRSA02J-0R0X	MG RESISTOR	0Ω 1/10W J
K6271	NQR0499-001X	FERRITE BEADS	
K6272	NQR0499-001X	FERRITE BEADS	
K6274	NQR0499-001X	FERRITE BEADS	
K6921	NRSA02J-0R0X	MG RESISTOR	0Ω 1/10W J
K7032	NRSA02J-0R0X	MG RESISTOR	0Ω 1/10W J
K7033	NRSA02J-0R0X	MG RESISTOR	0Ω 1/10W J
K7034	NRSA02J-0R0X	MG RESISTOR	0Ω 1/10W J
K7202	NRSA63J-0R0X	MG RESISTOR	0Ω 1/16W J
K7211	NQR0499-002X	FERRITE BEADS	
K7501	NQR0413-002X	FERRITE BEADS	
K7504	NRSA63J-0R0X	MG RESISTOR	0Ω 1/16W J
K7601	NRSA02J-0R0X	MG RESISTOR	0Ω 1/10W J
LC7505	NQR0483-005X	EMI FILTER	100uF 25V Z
LC9301	NQR0470-003X	EMI FILTER	100pF 50V
LC9303	NQR0483-005X	EMI FILTER	100uF 25V Z
LC9305	NQR0483-005X	EMI FILTER	100uF 25V Z
LC9307	NQR0483-005X	EMI FILTER	100uF 25V Z
X6250	NAX0580-001X	CXO	27.0000MHz
X6250	NAX0824-001X	CXO	27.000000MHz
X7001	NAX0669-001X	C RESONATOR	6.000MHz
X7601	NAX0613-001X	C RESONATOR	16.000MHz

SIDE CONTROL P.W. BOARD ASS'Y (SRA0L012A-M2)

REFER TO PARTS LIST IN PAGE 3-33 FOR THIS P.W. BOARD.

FRONT LED P.W. BOARD ASS'Y (SRA0L113A-M2)

REFER TO PARTS LIST IN PAGE 3-33 FOR THIS P.W. BOARD.

LAMP COVER P.W. BOARD ASS'Y (SRA0L211A-M2)

REFER TO PARTS LIST IN PAGE 3-34 FOR THIS P.W. BOARD.

TUNER P.W. BOARD ASS'Y (SRA0R013A-M2)

REFER TO PARTS LIST IN PAGE 3-34 FOR THIS P.W. BOARD.

ATSC TUNER MODULE P.W. BOARD ASS'Y (SSD-2111A-M2)

REFER TO PARTS LIST IN PAGE 3-34 FOR THIS P.W. BOARD.

PRINTED WIRING BOARD PARTS LIST [HD-61FN97]

ANALOG P.W. BOARD ASS'Y (SRA-1016A-M2)

REFER TO PARTS LIST IN PAGE 3-35 FOR THIS P.W. BOARD.

DRIVE P.W. BOARD ASS'Y (SRA-3004A-M2)

REFER TO PARTS LIST IN PAGE 3-16 FOR THIS P.W. BOARD.

REMOCON P.W. BOARD ASS'Y (SRA-8011A-M2)

REFER TO PARTS LIST IN PAGE 3-26 FOR THIS P.W. BOARD.

TEMP P.W. BOARD ASS'Y (SRA-8203A-M2)

REFER TO PARTS LIST IN PAGE 3-26 FOR THIS P.W. BOARD.

IRIS P.W. BOARD ASS'Y (SRA-8303A-M2)

REFER TO PARTS LIST IN PAGE 3-26 FOR THIS P.W. BOARD.

SD CARD P.W. BOARD ASS'Y (SRA-8505A-M2)

REFER TO PARTS LIST IN PAGE 3-27 FOR THIS P.W. BOARD.

POWER P.W. BOARD ASS'Y (SRA-9014A-M2)

REFER TO PARTS LIST IN PAGE 3-27 FOR THIS P.W. BOARD.

DIGITAL P.W. BOARD ASS'Y (SRA0D126A-M2)

⚠Ref No.	Part No.	Part Name	Description	Local
IC6001	JCC5068	IC		
IC6002	SN74LVC1G08V-X	IC		
IC6003	MK2302S-01LF-X	IC		
IC6004	ICS574MLF-X	IC		
IC6011	SN74CBQ16211G-X	IC		
IC6012	SN74CBQ3306AU-X	IC		
IC6013	SN74CBQ3306AU-X	IC		
IC6101	EDD1232AAFA-6B	IC		
IC6102	LP2996MR-X	IC		
IC6250	UPC5702GS-027-X	IC		
IC6251	R1170H331B-X	IC		
IC6501	THC63LVD1023	IC		
IC6724	S-80928CLNB-G-W	IC		
IC6901	R1141Q331B-X	IC		
IC7033	CD74HC4094PW-X	IC		
IC7036	ADC081S021CIS-X	IC		
IC7201	39VF800A7IEKD56	IC(MICRO C ROM)		
IC7203	HY57V161610ETP7	IC		
IC7204	S-80928CLNB-G-W	IC		
IC7206	74LVC1G17GW-X	IC		
IC7601	M306V7MG-154FP	IC(MCU)		
IC7602	ATF16-56FN97	IC	(SERVICE)	
IC7603	SN74AHCT1G08V-X	IC		
IC7604	SN74LVC1G04V-X	IC		
IC7605	MM1673XN-X	IC		
IC7606	MM1673XN-X	IC		
IC9001	MP2263DN-C053-X	IC		
IC9001	MP2363DN-X	IC		
IC9101	MM1662FT-X	IC		
IC9201	MP2263DN-C053-X	IC		
IC9201	MP2363DN-X	IC		
IC9301	MM1701CH-X	IC		
Q6201	2SA1530A/QR/-X	TRANSISTOR		
Q6202	2SA1530A/QR/-X	TRANSISTOR		
Q6203	2SA1022/BC/-X	TRANSISTOR		
Q6204	2SA1022/BC/-X	TRANSISTOR		
Q6205	2SA1022/BC/-X	TRANSISTOR		
Q6206	2SA1022/BC/-X	TRANSISTOR		
Q6207	2SC3837K/NP/-X	TRANSISTOR		
Q6208	2SC3837K/NP/-X	TRANSISTOR		
Q6209	2SC3837K/NP/-X	TRANSISTOR		
Q6210	2SC3837K/NP/-X	TRANSISTOR		
Q6211	2SC3837K/NP/-X	TRANSISTOR		
Q6212	2SC3837K/NP/-X	TRANSISTOR		
Q6213	2SC3837K/NP/-X	TRANSISTOR		
Q6214	2SC3837K/NP/-X	TRANSISTOR		
Q6250	2SC3928A/QR/-X	TRANSISTOR		
Q6251	2SC3928A/QR/-X	TRANSISTOR		
Q7030	RT1N441C-X	TRANSISTOR		
Q7030	UN2213-X	DIGI TRANSISTOR		
Q7032	RT1P441C-X	DIGI TRANSISTOR		
Q7032	UN2113-X	TRANSISTOR		
Q7033	RT1P441C-X	DIGI TRANSISTOR		
Q7033	UN2113-X	TRANSISTOR		
Q7501	RT1N441C-X	TRANSISTOR		
Q7501	UN2213-X	DIGI TRANSISTOR		
D6052	1SS355W-X	DIODE		
D6052	MA111-X	SI DIODE		
D7201	RB501V-40-X	SB DIODE		
D7502	1SS355W-X	DIODE		
D7502	MA111-X	SI DIODE		
D7608	RB521S-30-X	SB DIODE		
D9001	EC30HA03L-X	SB DIODE		
D9002	EC30HA03L-X	SB DIODE		
D9003	PTZ3.9B-X	Z DIODE		
D9201	EC30HA03L-X	SB DIODE		
D9202	EC30HA03L-X	SB DIODE		
D9203	PTZ3.9B-X	Z DIODE		
D9204	1SS355W-X	DIODE		
D9204	MA111-X	SI DIODE		
C6002	NCB31CK-104X	C CAPACITOR	0.1uF	16V K
C6003	NCB31CK-104X	C CAPACITOR	0.1uF	16V K
C6004	NCB31CK-104X	C CAPACITOR	0.1uF	16V K
C6031	NCB31CK-104X	C CAPACITOR	0.1uF	16V K
C6051	NCB21HK-104X	C CAPACITOR	0.1uF	50V K
C6052	NCJ41CK-226X-U	C CAPACITOR	22mF	16V K
C6053	NDC31HJ-100X	C CAPACITOR	10pF	50V J
C6054	NCB31CK-104X	C CAPACITOR	0.1uF	16V K
C6055	NCB31CK-104X	C CAPACITOR	0.1uF	16V K
C6101	NCB30JK-225X	C CAPACITOR	2.2uF	6.3V K
C6103	NCB31AK-474X	C CAPACITOR	0.47uF	10V K
C6107	NCB31AK-474X	C CAPACITOR	0.47uF	10V K
C6109	NCB31CK-104X	C CAPACITOR	0.1uF	16V K
C6111	NCB31CK-104X	C CAPACITOR	0.1uF	16V K
C6112	NCB31CK-104X	C CAPACITOR	0.1uF	16V K
C6113	NCB31AK-474X	C CAPACITOR	0.47uF	10V K
C6114	NCB31CK-104X	C CAPACITOR	0.1uF	16V K
C6116	NCB31AK-474X	C CAPACITOR	0.47uF	10V K
C6117	NCB30JK-225X	C CAPACITOR	2.2uF	6.3V K
C6118	NCB31AK-474X	C CAPACITOR	0.47uF	10V K
C6119	NCB31AK-474X	C CAPACITOR	0.47uF	10V K
C6121	NCB31AK-474X	C CAPACITOR	0.47uF	10V K
C6122	NEHL0JM-107X	E CAPACITOR	100uF	6.3V M
C6123	NCB31CK-104X	C CAPACITOR	0.1uF	16V K
C6124	NEHL0JM-107X	E CAPACITOR	100uF	6.3V M
C6125	NCB31CK-104X	C CAPACITOR	0.1uF	16V K
C6126	NCB30JK-225X	C CAPACITOR	2.2uF	6.3V K
C6128	NCB30JK-225X	C CAPACITOR	2.2uF	6.3V K
C6130	NCB30JK-225X	C CAPACITOR	2.2uF	6.3V K
C6132	NEHL1EM-226X	E CAPACITOR	22uF	25V M
C6133	NCB31CK-154X	C CAPACITOR	0.15uF	16V K
C6134	NCB11AK-106X	C CAPACITOR	10uF	10V K
C6135	NCB31CK-104X	C CAPACITOR	0.1uF	16V K
C6139	NCB31CK-104X	C CAPACITOR	0.1uF	16V K
C6205	NCB31CK-104X	C CAPACITOR	0.1uF	16V K
C6211	NCB31CK-104X	C CAPACITOR	0.1uF	16V K
C6217	NCB31CK-104X	C CAPACITOR	0.1uF	16V K
C6218	NCB31CK-104X	C CAPACITOR	0.1uF	16V K
C6219	NCB31CK-104X	C CAPACITOR	0.1uF	16V K
C6220	NCB31CK-104X	C CAPACITOR	0.1uF	16V K
C6227	NCB31CK-104X	C CAPACITOR	0.1uF	16V K
C6228	NCB31CK-104X	C CAPACITOR	0.1uF	16V K
C6229	NCB31CK-104X	C CAPACITOR	0.1uF	16V K
C6236	NCB31CK-104X	C CAPACITOR	0.1uF	16V K
C6237	NCB31CK-104X	C CAPACITOR	0.1uF	16V K
C6238	NCB31CK-104X	C CAPACITOR	0.1uF	16V K
C6239	NCB31CK-104X	C CAPACITOR	0.1uF	16V K
C6240	NCB31CK-104X	C CAPACITOR	0.1uF	16V K
C6241	NCB11AK-106X	C CAPACITOR	10uF	10V K
C6242	NCB31AK-105X	C CAPACITOR	1uF	10V K
C6243	NCB11AK-106X	C CAPACITOR	10uF	10V K
C6244	NCB31AK-105X	C CAPACITOR	1uF	10V K
C6245	NCB11AK-106X	C CAPACITOR	10uF	10V K
C6246	NCB31AK-105X	C CAPACITOR	1uF	10V K
C6247	NCB11AK-106X	C CAPACITOR	10uF	10V K
C6248	NCB31AK-105X	C CAPACITOR	1uF	10V K

⚠Ref No.	Part No.	Part Name	Description Local
C6249	NCB31AK-105X	C CAPACITOR	1uF 10V K
C6250	NCB11AK-106X	C CAPACITOR	10uF 10V K
C6251	NCB31CK-104X	C CAPACITOR	0.1uF 16V K
C6252	NCB11AK-106X	C CAPACITOR	10uF 10V K
C6253	NCB11AK-106X	C CAPACITOR	10uF 10V K
C6254	NCB11AK-106X	C CAPACITOR	10uF 10V K
C6255	NCB11AK-106X	C CAPACITOR	10uF 10V K
C6260	NCB21AK-225X	C CAPACITOR	2.2uF 10V K
C6261	NCB21AK-225X	C CAPACITOR	2.2uF 10V K
C6262	NCB21AK-225X	C CAPACITOR	2.2uF 10V K
C6263	NCB21AK-225X	C CAPACITOR	2.2uF 10V K
C6268	NCB31CK-104X	C CAPACITOR	0.1uF 16V K
C6270	NCB31CK-104X	C CAPACITOR	0.1uF 16V K
C6271	NCB31CK-104X	C CAPACITOR	0.1uF 16V K
C6272	NCB31CK-104X	C CAPACITOR	0.1uF 16V K
C6273	NCB31CK-104X	C CAPACITOR	0.1uF 16V K
C6274	NCB31CK-104X	C CAPACITOR	0.1uF 16V K
C6276	NCB31CK-104X	C CAPACITOR	0.1uF 16V K
C6277	NCB31CK-104X	C CAPACITOR	0.1uF 16V K
C6278	NCB31CK-104X	C CAPACITOR	0.1uF 16V K
C6279	NCB31CK-104X	C CAPACITOR	0.1uF 16V K
C6280	NCB31CK-104X	C CAPACITOR	0.1uF 16V K
C6282	NCB31CK-104X	C CAPACITOR	0.1uF 16V K
C6283	NCB31CK-104X	C CAPACITOR	0.1uF 16V K
C6284	NCB31CK-104X	C CAPACITOR	0.1uF 16V K
C6285	NCB31CK-104X	C CAPACITOR	0.1uF 16V K
C6286	NCB31CK-104X	C CAPACITOR	0.1uF 16V K
C6288	NCB31CK-104X	C CAPACITOR	0.1uF 16V K
C6289	NCB31CK-104X	C CAPACITOR	0.1uF 16V K
C6291	NCB31CK-104X	C CAPACITOR	0.1uF 16V K
C6293	NCB31CK-104X	C CAPACITOR	0.1uF 16V K
C6294	NBZ0007-107X	SP E CAPACITOR	100uF 4V M
C6295	NBZ0007-107X	SP E CAPACITOR	100uF 4V M
C6296	NCB11AK-106X	C CAPACITOR	10uF 10V K
C6297	NCB11AK-106X	C CAPACITOR	10uF 10V K
C6299	NCB31CK-104X	C CAPACITOR	0.1uF 16V K
C6300	NCB31CK-104X	C CAPACITOR	0.1uF 16V K
C6301	NCB31CK-104X	C CAPACITOR	0.1uF 16V K
C6501	NCB31CK-104X	C CAPACITOR	0.1uF 16V K
C6502	NCB31CK-104X	C CAPACITOR	0.1uF 16V K
C6503	NCB31CK-104X	C CAPACITOR	0.1uF 16V K
C6504	NCB31CK-104X	C CAPACITOR	0.1uF 16V K
C6505	NCB31CK-104X	C CAPACITOR	0.1uF 16V K
C6506	NCB31CK-104X	C CAPACITOR	0.1uF 16V K
C6507	NCB31CK-104X	C CAPACITOR	0.1uF 16V K
C6508	NCB31CK-104X	C CAPACITOR	0.1uF 16V K
C6509	NCB31CK-104X	C CAPACITOR	0.1uF 16V K
C6510	NCB31CK-104X	C CAPACITOR	0.1uF 16V K
C6511	NCB31CK-104X	C CAPACITOR	0.1uF 16V K
C6512	NCB31CK-104X	C CAPACITOR	0.1uF 16V K
C6513	NCB31CK-104X	C CAPACITOR	0.1uF 16V K
C6514	NCB31CK-104X	C CAPACITOR	0.1uF 16V K
C6515	NCB31CK-104X	C CAPACITOR	0.1uF 16V K
C6520	NCB11AK-106X	C CAPACITOR	10uF 10V K
C6571	NDC31HJ-101X	C CAPACITOR	100pF 50V J
C6572	NCB21CK-104X	C CAPACITOR	0.1uF 16V K
C6601	NCB31CK-104X	C CAPACITOR	0.1uF 16V K
C6602	NCB31CK-104X	C CAPACITOR	0.1uF 16V K
C6603	NCB31CK-104X	C CAPACITOR	0.1uF 16V K
C6610	NCB31CK-104X	C CAPACITOR	0.1uF 16V K
C6611	NCB31CK-104X	C CAPACITOR	0.1uF 16V K
C6612	NCB31CK-104X	C CAPACITOR	0.1uF 16V K
C6613	NCB31CK-104X	C CAPACITOR	0.1uF 16V K
C6614	NCB31CK-104X	C CAPACITOR	0.1uF 16V K
C6615	NCB31CK-104X	C CAPACITOR	0.1uF 16V K
C6616	NCB31CK-104X	C CAPACITOR	0.1uF 16V K
C6617	NCB31CK-104X	C CAPACITOR	0.1uF 16V K
C6618	NCB31CK-104X	C CAPACITOR	0.1uF 16V K
C6619	NCB31CK-104X	C CAPACITOR	0.1uF 16V K
C6620	NCB31CK-104X	C CAPACITOR	0.1uF 16V K
C6621	NCB31CK-104X	C CAPACITOR	0.1uF 16V K
C6622	NCB31CK-104X	C CAPACITOR	0.1uF 16V K
C6623	NCB31CK-104X	C CAPACITOR	0.1uF 16V K
C6624	NCB31CK-104X	C CAPACITOR	0.1uF 16V K
C6625	NCB31CK-104X	C CAPACITOR	0.1uF 16V K
C6626	NCB31CK-104X	C CAPACITOR	0.1uF 16V K
C6627	NCB31CK-104X	C CAPACITOR	0.1uF 16V K
C6628	NCB31CK-104X	C CAPACITOR	0.1uF 16V K
C6629	NCB31CK-104X	C CAPACITOR	0.1uF 16V K
C6630	NCB31CK-104X	C CAPACITOR	0.1uF 16V K
C6631	NCB31CK-104X	C CAPACITOR	0.1uF 16V K
C6632	NCB31CK-104X	C CAPACITOR	0.1uF 16V K
C6633	NCB31CK-104X	C CAPACITOR	0.1uF 16V K
C6634	NCB31CK-104X	C CAPACITOR	0.1uF 16V K
C6635	NCB31CK-104X	C CAPACITOR	0.1uF 16V K
C6636	NCB31CK-104X	C CAPACITOR	0.1uF 16V K
C6637	NCB31CK-104X	C CAPACITOR	0.1uF 16V K
C6638	NCB31CK-104X	C CAPACITOR	0.1uF 16V K
C6639	NCB31CK-104X	C CAPACITOR	0.1uF 16V K
C6640	NCB31CK-104X	C CAPACITOR	0.1uF 16V K

⚠Ref No.	Part No.	Part Name	Description Local
C6641	NCB31CK-104X	C CAPACITOR	0.1uF 16V K
C6642	NCB31CK-104X	C CAPACITOR	0.1uF 16V K
C6643	NCB31CK-104X	C CAPACITOR	0.1uF 16V K
C6644	NCB31CK-104X	C CAPACITOR	0.1uF 16V K
C6645	NCB31CK-104X	C CAPACITOR	0.1uF 16V K
C6654	NCB31CK-104X	C CAPACITOR	0.1uF 16V K
C6656	NCB31CK-104X	C CAPACITOR	0.1uF 16V K
C6657	NCB31CK-104X	C CAPACITOR	0.1uF 16V K
C6658	NCB31CK-104X	C CAPACITOR	0.1uF 16V K
C6659	NCB31CK-104X	C CAPACITOR	0.1uF 16V K
C6660	NCB31CK-104X	C CAPACITOR	0.1uF 16V K
C6661	NCB31CK-104X	C CAPACITOR	0.1uF 16V K
C6669	NCB31CK-104X	C CAPACITOR	0.1uF 16V K
C6670	NCB31CK-104X	C CAPACITOR	0.1uF 16V K
C6677	NCB31CK-104X	C CAPACITOR	0.1uF 16V K
C6678	NCB31CK-104X	C CAPACITOR	0.1uF 16V K
C6679	NCB31CK-104X	C CAPACITOR	0.1uF 16V K
C6680	NCB31CK-104X	C CAPACITOR	0.1uF 16V K
C6681	NCB31CK-104X	C CAPACITOR	0.1uF 16V K
C6682	NCB31CK-104X	C CAPACITOR	0.1uF 16V K
C6683	NCB31CK-104X	C CAPACITOR	0.1uF 16V K
C6684	NCB31CK-104X	C CAPACITOR	0.1uF 16V K
C6685	NCB31CK-104X	C CAPACITOR	0.1uF 16V K
C6686	NCB31CK-104X	C CAPACITOR	0.1uF 16V K
C6687	NCB31CK-104X	C CAPACITOR	0.1uF 16V K
C6688	NCB31CK-104X	C CAPACITOR	0.1uF 16V K
C6689	NCB31CK-104X	C CAPACITOR	0.1uF 16V K
C6690	NCB31CK-104X	C CAPACITOR	0.1uF 16V K
C6691	NCB31CK-104X	C CAPACITOR	0.1uF 16V K
C6692	NCB31CK-104X	C CAPACITOR	0.1uF 16V K
C6693	NCB31CK-104X	C CAPACITOR	0.1uF 16V K
C6694	NCB31CK-104X	C CAPACITOR	0.1uF 16V K
C6695	NCB31CK-104X	C CAPACITOR	0.1uF 16V K
C6696	NCB31CK-104X	C CAPACITOR	0.1uF 16V K
C6697	NCB31CK-104X	C CAPACITOR	0.1uF 16V K
C6698	NCB31CK-104X	C CAPACITOR	0.1uF 16V K
C6699	NCB31CK-104X	C CAPACITOR	0.1uF 16V K
C6701	NCF11CZ-475X	C CAPACITOR	4.7uF 16V Z
C6723	NCB31HK-222X	C CAPACITOR	2200pF 50V K
C6724	NCB31CK-103X	C CAPACITOR	0.01uF 16V K
C6901	NBZ0007-107X	SP E CAPACITOR	100uF 4V M
C6902	NCB31CK-104X	C CAPACITOR	0.1uF 16V K
C6903	NCB31CK-104X	C CAPACITOR	0.1uF 16V K
C6904	NCB31CK-104X	C CAPACITOR	0.1uF 16V K
C6905	NCB31CK-104X	C CAPACITOR	0.1uF 16V K
C6906	NCB31CK-104X	C CAPACITOR	0.1uF 16V K
C6907	NCB31CK-104X	C CAPACITOR	0.1uF 16V K
C6908	NCB31CK-104X	C CAPACITOR	0.1uF 16V K
C6909	NCB31CK-104X	C CAPACITOR	0.1uF 16V K
C6910	NCB31CK-104X	C CAPACITOR	0.1uF 16V K
C6911	NCB31CK-104X	C CAPACITOR	0.1uF 16V K
C6912	NCB11AK-106X	C CAPACITOR	10uF 10V K
C6913	NCB31CK-104X	C CAPACITOR	0.1uF 16V K
C6914	NCB31CK-104X	C CAPACITOR	0.1uF 16V K
C6915	NCB31CK-104X	C CAPACITOR	0.1uF 16V K
C6916	NCB31CK-104X	C CAPACITOR	0.1uF 16V K
C6917	NCB31CK-104X	C CAPACITOR	0.1uF 16V K
C6918	NCB31CK-104X	C CAPACITOR	0.1uF 16V K
C6919	NCB31CK-104X	C CAPACITOR	0.1uF 16V K
C6921	NCB11AK-106X	C CAPACITOR	10uF 10V K
C6922	NCB31CK-104X	C CAPACITOR	0.1uF 16V K
C6923	NCB11AK-106X	C CAPACITOR	10uF 10V K
C6924	NCB31CK-104X	C CAPACITOR	0.1uF 16V K
C6925	NCB11AK-106X	C CAPACITOR	10uF 10V K
C6926	NCB31CK-104X	C CAPACITOR	0.1uF 16V K
C6927	NCB11AK-106X	C CAPACITOR	10uF 10V K
C6928	NCB31CK-104X	C CAPACITOR	0.1uF 16V K
C6929	NCB31AK-105X	C CAPACITOR	1uF 10V K
C7039	NCB31HK-102X	C CAPACITOR	1000pF 50V K
C7040	NCB11AK-106X	C CAPACITOR	10uF 10V K
C7044	NCB31CK-104X	C CAPACITOR	0.1uF 16V K
C7051	NCB31CK-104X	C CAPACITOR	0.1uF 16V K
C7052	NCB31CK-104X	C CAPACITOR	0.1uF 16V K
C7053	NCB31CK-104X	C CAPACITOR	0.1uF 16V K
C7054	NCB31CK-104X	C CAPACITOR	0.1uF 16V K
C7055	NCB31CK-104X	C CAPACITOR	0.1uF 16V K
C7056	NCB31CK-104X	C CAPACITOR	0.1uF 16V K
C7057	NCB31CK-104X	C CAPACITOR	0.1uF 16V K
C7058	NCB31CK-104X	C CAPACITOR	0.1uF 16V K
C7059	NCB31CK-104X	C CAPACITOR	0.1uF 16V K
C7060	NCB31CK-104X	C CAPACITOR	0.1uF 16V K
C7061	NCB31CK-104X	C CAPACITOR	0.1uF 16V K
C7062	NCB31CK-104X	C CAPACITOR	0.1uF 16V K
C7063	NCB31CK-104X	C CAPACITOR	0.1uF 16V K
C7064	NCB31CK-104X	C CAPACITOR	0.1uF 16V K
C7065	NCB31CK-104X	C CAPACITOR	0.1uF 16V K
C7066	NCB31CK-104X	C CAPACITOR	0.1uF 16V K
C7067	NCB31CK-104X	C CAPACITOR	0.1uF 16V K
C7068	NCB31CK-104X	C CAPACITOR	0.1uF 16V K
C7073	NCB31CK-104X	C CAPACITOR	0.1uF 16V K

⚠Ref No.	Part No.	Part Name	Description Local
C7202	NCB31CK-104X	C CAPACITOR	0.1uF 16V K
C7203	NCB31CK-104X	C CAPACITOR	0.1uF 16V K
C7204	NCB31CK-104X	C CAPACITOR	0.1uF 16V K
C7205	NCB31CK-104X	C CAPACITOR	0.1uF 16V K
C7206	NCB31CK-104X	C CAPACITOR	0.1uF 16V K
C7207	NCB31CK-104X	C CAPACITOR	0.1uF 16V K
C7208	NCB31CK-104X	C CAPACITOR	0.1uF 16V K
C7209	NCB31CK-104X	C CAPACITOR	0.1uF 16V K
C7211	NCB31HK-102X	C CAPACITOR	1000pF 50V K
C7215	NDC31HJ-330X	C CAPACITOR	33pF 50V J
C7216	NCB31CK-104X	C CAPACITOR	0.1uF 16V K
C7501	NCB31CK-104X	C CAPACITOR	0.1uF 16V K
C7504	NDC31HJ-100X	C CAPACITOR	10pF 50V J
C7505	NDC31HJ-101X	C CAPACITOR	100pF 50V J
C7506	NCB31CK-103X	C CAPACITOR	0.01uF 16V K
C7507	NDC31HJ-100X	C CAPACITOR	10pF 50V J
C7508	NDC31HJ-100X	C CAPACITOR	10pF 50V J
C7510	NDC31HJ-100X	C CAPACITOR	10pF 50V J
C7514	NDC31HJ-100X	C CAPACITOR	10pF 50V J
C7515	NDC31HJ-100X	C CAPACITOR	10pF 50V J
C7516	NDC31HJ-100X	C CAPACITOR	10pF 50V J
C7517	NDC31HJ-100X	C CAPACITOR	10pF 50V J
C7601	NCB11CK-105X	C CAPACITOR	1uF 16V K
C7602	NCB31CK-104X	C CAPACITOR	0.1uF 16V K
C7603	NCB31CK-104X	C CAPACITOR	0.1uF 16V K
C7604	NCB31HK-102X	C CAPACITOR	1000pF 50V K
C7605	NCB31HK-221X	C CAPACITOR	220pF 50V K
C7606	NCB21AK-225X	C CAPACITOR	2.2uF 10V K
C7607	NCB31HK-681X	C CAPACITOR	680pF 50V K
C7608	NCB31CK-104X	C CAPACITOR	0.1uF 16V K
C7609	NCB31HK-681X	C CAPACITOR	680pF 50V K
C7610	NDC31HJ-102X	C CAPACITOR	1000pF 50V J
C7611	NDC31HJ-221X	C CAPACITOR	220pF 50V J
C7612	NCB21AK-225X	C CAPACITOR	2.2uF 10V K
C7615	NCB31CK-104X	C CAPACITOR	0.1uF 16V K
C7616	NCB31CK-104X	C CAPACITOR	0.1uF 16V K
C7617	NCB31CK-104X	C CAPACITOR	0.1uF 16V K
C7618	NCF11CZ-475X	C CAPACITOR	4.7uF 16V Z
C7619	NCB11AK-106X	C CAPACITOR	10uF 10V K
C7620	NCF11CZ-475X	C CAPACITOR	4.7uF 16V Z
C7621	NCB11AK-106X	C CAPACITOR	10uF 10V K
C7625	NCB31CK-104X	C CAPACITOR	0.1uF 16V K
C7631	NCB31AK-224X	C CAPACITOR	0.22uF 10V K
C7632	NCB31AK-224X	C CAPACITOR	0.22uF 10V K
C7633	NDC31HJ-151X	C CAPACITOR	150pF 50V J
C9001	NDC31HJ-102X	C CAPACITOR	1000pF 50V J
C9002	NCJ41EK-106X-U	C CAPACITOR	10mF 25V K
C9003	NCB31EK-104X	C CAPACITOR	0.1uF 25V K
C9004	NCB31HK-103X	C CAPACITOR	0.01uF 50V K
C9005	NCJ41CK-226X-U	C CAPACITOR	22mF 16V K
C9006	NDC31HJ-120X	C CAPACITOR	12pF 50V J
C9007	NCB31HK-103X	C CAPACITOR	0.01uF 50V K
C9010	NCJ41CK-226X-U	C CAPACITOR	22mF 16V K
C9101	NCB11CK-475X	C CAPACITOR	4.7uF 16V K
C9103	NCB11CK-225X	C CAPACITOR	2.2uF 16V K
C9201	NDC31HJ-102X	C CAPACITOR	1000pF 50V J
C9202	NCJ41EK-106X-U	C CAPACITOR	10mF 25V K
C9204	NCB31HK-103X	C CAPACITOR	0.01uF 50V K
C9205	NCJ41CK-226X-U	C CAPACITOR	22mF 16V K
C9206	NDC31HJ-120X	C CAPACITOR	12pF 50V J
C9207	NCB31HK-153X	C CAPACITOR	0.015uF 50V K
C9208	NCJ41CK-226X-U	C CAPACITOR	22mF 16V K
C9209	NCB31HK-102X	C CAPACITOR	1000pF 50V K
C9211	NCB31CK-473X	C CAPACITOR	0.047uF 16V K
C9301	NDC31HJ-101X	C CAPACITOR	100pF 50V J
C9302	NCB11CK-475X	C CAPACITOR	4.7uF 16V K
C9303	NCB31HK-103X	C CAPACITOR	0.01uF 50V K
C9304	NCB11CK-475X	C CAPACITOR	4.7uF 16V K
C9306	NRSA63J-0R0X	MG RESISTOR	0Ω 1/16W J
C9313	NCB31HK-102X	C CAPACITOR	1000pF 50V K
C9314	NCB31HK-102X	C CAPACITOR	1000pF 50V K
R6002	NRSA63J-0R0X	MG RESISTOR	0Ω 1/16W J
R6003	NRSA63J-0R0X	MG RESISTOR	0Ω 1/16W J
R6006	NRSA63J-0R0X	MG RESISTOR	0Ω 1/16W J
R6008	NRSA63J-0R0X	MG RESISTOR	0Ω 1/16W J
R6009	NRSA63J-220X	MG RESISTOR	22Ω 1/16W J
R6014	NRSA63J-0R0X	MG RESISTOR	0Ω 1/16W J
R6017	NRSA63J-0R0X	MG RESISTOR	0Ω 1/16W J
R6018	NRSA63J-0R0X	MG RESISTOR	0Ω 1/16W J
R6019	NRSA63J-0R0X	MG RESISTOR	0Ω 1/16W J
R6020	NRSA63J-0R0X	MG RESISTOR	0Ω 1/16W J
R6026	NRSA63J-0R0X	MG RESISTOR	0Ω 1/16W J
R6028	NRSA63J-0R0X	MG RESISTOR	0Ω 1/16W J
R6031	NRSA63J-0R0X	MG RESISTOR	0Ω 1/16W J
R6032	NRSA63D-470X	MG RESISTOR	47Ω 1/16W D
R6033	NRSA63J-0R0X	MG RESISTOR	0Ω 1/16W J
R6034	NRSA63J-0R0X	MG RESISTOR	0Ω 1/16W J
R6037	NRSA63D-330X	MG RESISTOR	33Ω 1/16W D
R6055	NRS181J-0R0X	MG RESISTOR	0Ω 1/8W J

⚠Ref No.	Part No.	Part Name	Description Local
R6057	NRSA63J-220X	MG RESISTOR	22Ω 1/16W J
R6058	NRSA63J-220X	MG RESISTOR	22Ω 1/16W J
R6059	NRSA63J-101X	MG RESISTOR	100Ω 1/16W J
R6060	NRSA63J-0R0X	MG RESISTOR	0Ω 1/16W J
R6061	NRSA63J-0R0X	MG RESISTOR	0Ω 1/16W J
R6064	NRSA63J-220X	MG RESISTOR	22Ω 1/16W J
R6065	NRSA63J-220X	MG RESISTOR	22Ω 1/16W J
R6066	NRSA63J-220X	MG RESISTOR	22Ω 1/16W J
R6068	NRZ0080-0R0X	NET RESISTOR	0Ω 1/16W J
R6072	NRSA63J-0R0X	MG RESISTOR	0Ω 1/16W J
R6073	NRSA63J-0R0X	MG RESISTOR	0Ω 1/16W J
R6074	NRSA63J-0R0X	MG RESISTOR	0Ω 1/16W J
R6075	NRSA63J-0R0X	MG RESISTOR	0Ω 1/16W J
R6080	NRSA63J-0R0X	MG RESISTOR	0Ω 1/16W J
R6101	NRSA63J-220X	MG RESISTOR	22Ω 1/16W J
R6102	NRSA63J-220X	MG RESISTOR	22Ω 1/16W J
R6103	NRSA63J-220X	MG RESISTOR	22Ω 1/16W J
R6104	NRSA63J-220X	MG RESISTOR	22Ω 1/16W J
R6105	NRSA63J-220X	MG RESISTOR	22Ω 1/16W J
R6106	NRSA63J-220X	MG RESISTOR	22Ω 1/16W J
R6107	NRSA63J-100X	MG RESISTOR	10Ω 1/16W J
R6108	NRSA63J-100X	MG RESISTOR	10Ω 1/16W J
R6109	NRSA63J-220X	MG RESISTOR	22Ω 1/16W J
R6110	NRSA63J-220X	MG RESISTOR	22Ω 1/16W J
R6111	NRSA63J-220X	MG RESISTOR	22Ω 1/16W J
R6112	NRSA63J-470X	MG RESISTOR	47Ω 1/16W J
R6113	NRSA63J-470X	MG RESISTOR	47Ω 1/16W J
R6114	NRSA63J-470X	MG RESISTOR	47Ω 1/16W J
R6115	NRSA63J-470X	MG RESISTOR	47Ω 1/16W J
R6116	NRSA63J-470X	MG RESISTOR	47Ω 1/16W J
R6117	NRSA63J-470X	MG RESISTOR	47Ω 1/16W J
R6118	NRSA63J-470X	MG RESISTOR	47Ω 1/16W J
R6119	NRSA63J-470X	MG RESISTOR	47Ω 1/16W J
R6120	NRSA63J-470X	MG RESISTOR	47Ω 1/16W J
R6121	NRSA63J-470X	MG RESISTOR	47Ω 1/16W J
R6122	NRSA63J-470X	MG RESISTOR	47Ω 1/16W J
R6127	NRSA63J-1R5X	MG RESISTOR	1.5Ω 1/16W J
R6141	NRSA63J-0R0X	MG RESISTOR	0Ω 1/16W J
R6142	NRSA63J-0R0X	MG RESISTOR	0Ω 1/16W J
R6201	NRSA63J-0R0X	MG RESISTOR	0Ω 1/16W J
R6202	NRSA63J-0R0X	MG RESISTOR	0Ω 1/16W J
R6203	NRSA63J-0R0X	MG RESISTOR	0Ω 1/16W J
R6204	NRSA63J-0R0X	MG RESISTOR	0Ω 1/16W J
R6205	NRSA63J-332X	MG RESISTOR	3.3kΩ 1/16W J
R6207	NRSA63J-0R0X	MG RESISTOR	0Ω 1/16W J
R6209	NRSA63J-0R0X	MG RESISTOR	0Ω 1/16W J
R6214	NRSA63J-0R0X	MG RESISTOR	0Ω 1/16W J
R6215	NRSA63J-0R0X	MG RESISTOR	0Ω 1/16W J
R6216	NRSA63J-0R0X	MG RESISTOR	0Ω 1/16W J
R6217	NRSA63J-0R0X	MG RESISTOR	0Ω 1/16W J
R6220	NRSA63J-682X	MG RESISTOR	6.8kΩ 1/16W J
R6223	NRSA63J-0R0X	MG RESISTOR	0Ω 1/16W J
R6224	NRSA63J-0R0X	MG RESISTOR	0Ω 1/16W J
R6225	NRSA63J-0R0X	MG RESISTOR	0Ω 1/16W J
R6226	NRSA63J-0R0X	MG RESISTOR	0Ω 1/16W J
R6227	NRSA63J-391X	MG RESISTOR	390Ω 1/16W J
R6228	NRSA63J-332X	MG RESISTOR	3.3kΩ 1/16W J
R6229	NRSA63J-682X	MG RESISTOR	6.8kΩ 1/16W J
R6230	NRSA63J-0R0X	MG RESISTOR	0Ω 1/16W J
R6231	NRSA63J-0R0X	MG RESISTOR	0Ω 1/16W J
R6232	NRSA63J-0R0X	MG RESISTOR	0Ω 1/16W J
R6233	NRSA63J-0R0X	MG RESISTOR	0Ω 1/16W J
R6234	NRSA63J-391X	MG RESISTOR	390Ω 1/16W J
R6235	NRSA63J-101X	MG RESISTOR	100Ω 1/16W J
R6236	NRSA63J-331X	MG RESISTOR	330Ω 1/16W J
R6237	NRSA63J-332X	MG RESISTOR	3.3kΩ 1/16W J
R6238	NRSA63J-101X	MG RESISTOR	100Ω 1/16W J
R6239	NRSA63J-331X	MG RESISTOR	330Ω 1/16W J
R6240	NRSA63J-682X	MG RESISTOR	6.8kΩ 1/16W J
R6241	NRSA63J-101X	MG RESISTOR	100Ω 1/16W J
R6242	NRSA63J-331X	MG RESISTOR	330Ω 1/16W J
R6243	NRSA63J-102X	MG RESISTOR	1kΩ 1/16W J
R6244	NRSA63J-101X	MG RESISTOR	100Ω 1/16W J
R6245	NRSA63J-331X	MG RESISTOR	330Ω 1/16W J
R6246	NRSA63J-332X	MG RESISTOR	3.3kΩ 1/16W J
R6247	NRSA63J-682X	MG RESISTOR	6.8kΩ 1/16W J
R6248	NRSA63J-473X	MG RESISTOR	47kΩ 1/16W J
R6249	NRSA63J-333X	MG RESISTOR	33kΩ 1/16W J
R6251	NRSA63J-0R0X	MG RESISTOR	0Ω 1/16W J
R6252	NRSA63J-0R0X	MG RESISTOR	0Ω 1/16W J
R6253	NRSA63J-222X	MG RESISTOR	2.2kΩ 1/16W J
R6254	NRSA63J-151X	MG RESISTOR	150Ω 1/16W J
R6255	NRSA63J-472X	MG RESISTOR	4.7kΩ 1/16W J
R6256	NRSA63J-0R0X	MG RESISTOR	0Ω 1/16W J
R6257	NRSA63J-222X	MG RESISTOR	2.2kΩ 1/16W J
R6258	NRSA63J-151X	MG RESISTOR	150Ω 1/16W J
R6259	NRSA63J-472X	MG RESISTOR	4.7kΩ 1/16W J
R6260	NRSA63J-0R0X	MG RESISTOR	0Ω 1/16W J
R6261	NRSA63J-222X	MG RESISTOR	2.2kΩ 1/16W J
R6262	NRSA63J-151X	MG RESISTOR	150Ω 1/16W J

⚠Ref No.	Part No.	Part Name	Description Local
R6263	NRSA63J-472X	MG RESISTOR	4.7kΩ 1/16W J
R6264	NRSA63J-0R0X	MG RESISTOR	0Ω 1/16W J
R6265	NRSA63J-103X	MG RESISTOR	10kΩ 1/16W J
R6266	NRSA63J-221X	MG RESISTOR	220Ω 1/16W J
R6267	NRSA63J-472X	MG RESISTOR	4.7kΩ 1/16W J
R6268	NRSA63D-242X	MG RESISTOR	2.4kΩ 1/16W D
R6269	NRSA63D-242X	MG RESISTOR	2.4kΩ 1/16W D
R6270	NRSA63D-242X	MG RESISTOR	2.4kΩ 1/16W D
R6271	NRSA63D-242X	MG RESISTOR	2.4kΩ 1/16W D
R6273	NRSA63J-0R0X	MG RESISTOR	0Ω 1/16W J
R6274	NRSA63J-220X	MG RESISTOR	22Ω 1/16W J
R6275	NRSA63J-0R0X	MG RESISTOR	0Ω 1/16W J
R6276	NRSA63J-0R0X	MG RESISTOR	0Ω 1/16W J
R6277	NRSA63J-391X	MG RESISTOR	390Ω 1/16W J
R6279	NRSA63J-0R0X	MG RESISTOR	0Ω 1/16W J
R6280	NRSA63J-331X	MG RESISTOR	330Ω 1/16W J
R6281	NRSA63J-101X	MG RESISTOR	100Ω 1/16W J
R6282	NRSA63J-331X	MG RESISTOR	330Ω 1/16W J
R6283	NRSA63J-101X	MG RESISTOR	100Ω 1/16W J
R6284	NRSA63J-0R0X	MG RESISTOR	0Ω 1/16W J
R6285	NRSA63J-0R0X	MG RESISTOR	0Ω 1/16W J
R6286	NRSA63J-391X	MG RESISTOR	390Ω 1/16W J
R6287	NRSA63J-391X	MG RESISTOR	390Ω 1/16W J
R6288	NRSA63J-391X	MG RESISTOR	390Ω 1/16W J
R6289	NRSA63J-102X	MG RESISTOR	1kΩ 1/16W J
R6290	NRSA63J-0R0X	MG RESISTOR	0Ω 1/16W J
R6291	NRSA63J-473X	MG RESISTOR	47kΩ 1/16W J
R6292	NRSA63J-473X	MG RESISTOR	47kΩ 1/16W J
R6300	NRSA63J-0R0X	MG RESISTOR	0Ω 1/16W J
R6302	NRSA63J-0R0X	MG RESISTOR	0Ω 1/16W J
R6305	NRSA63J-0R0X	MG RESISTOR	0Ω 1/16W J
R6332	NRSA63J-0R0X	MG RESISTOR	0Ω 1/16W J
R6333	NRSA63J-0R0X	MG RESISTOR	0Ω 1/16W J
R6338	NRSA63J-0R0X	MG RESISTOR	0Ω 1/16W J
R6339	NRSA63J-0R0X	MG RESISTOR	0Ω 1/16W J
R6501	NRSA63J-101X	MG RESISTOR	100Ω 1/16W J
R6502	NRSA63J-101X	MG RESISTOR	100Ω 1/16W J
R6503	NRSA63J-0R0X	MG RESISTOR	0Ω 1/16W J
R6505	NRSA63J-102X	MG RESISTOR	1kΩ 1/16W J
R6508	NRSA63J-0R0X	MG RESISTOR	0Ω 1/16W J
R6509	NRSA63J-102X	MG RESISTOR	1kΩ 1/16W J
R6511	NRSA63J-102X	MG RESISTOR	1kΩ 1/16W J
R6514	NRSA63J-0R0X	MG RESISTOR	0Ω 1/16W J
R6534	NRSA63J-0R0X	MG RESISTOR	0Ω 1/16W J
R6568	NRSA63J-0R0X	MG RESISTOR	0Ω 1/16W J
R6571	NRSA63J-0R0X	MG RESISTOR	0Ω 1/16W J
R6572	NRSA63J-0R0X	MG RESISTOR	0Ω 1/16W J
R6573	NRSA63J-0R0X	MG RESISTOR	0Ω 1/16W J
R6574	NRSA63J-0R0X	MG RESISTOR	0Ω 1/16W J
R6575	NRSA63J-0R0X	MG RESISTOR	0Ω 1/16W J
R6576	NRSA63J-0R0X	MG RESISTOR	0Ω 1/16W J
R6598	NRSA63J-104X	MG RESISTOR	100kΩ 1/16W J
R6607	NRSA63J-101X	MG RESISTOR	100Ω 1/16W J
R6609	NRSA63J-101X	MG RESISTOR	100Ω 1/16W J
R6611	NRSA63J-102X	MG RESISTOR	1kΩ 1/16W J
R6707	NRSA63J-0R0X	MG RESISTOR	0Ω 1/16W J
R6712	NRSA63J-0R0X	MG RESISTOR	0Ω 1/16W J
R6713	NRSA63J-0R0X	MG RESISTOR	0Ω 1/16W J
R6730	NRSA63J-0R0X	MG RESISTOR	0Ω 1/16W J
R6731	NRSA63J-0R0X	MG RESISTOR	0Ω 1/16W J
R6732	NRSA63J-0R0X	MG RESISTOR	0Ω 1/16W J
R6921	NRSA63J-0R0X	MG RESISTOR	0Ω 1/16W J
R6923	NRSA63J-0R0X	MG RESISTOR	0Ω 1/16W J
R6924	NRSA63J-0R0X	MG RESISTOR	0Ω 1/16W J
R6943	NRSA63J-150X	MG RESISTOR	15Ω 1/16W J
R6946	NRSA63D-220X	MG RESISTOR	22Ω 1/16W D
R6953	NRSA63J-0R0X	MG RESISTOR	0Ω 1/16W J
R7030	NRSA63J-0R0X	MG RESISTOR	0Ω 1/16W J
R7031	NRSA63J-0R0X	MG RESISTOR	0Ω 1/16W J
R7032	NRSA63J-151X	MG RESISTOR	150Ω 1/16W J
R7033	NRSA63J-0R0X	MG RESISTOR	0Ω 1/16W J
R7034	NRSA63J-0R0X	MG RESISTOR	0Ω 1/16W J
R7040	NRSA63J-0R0X	MG RESISTOR	0Ω 1/16W J
R7041	NRSA63J-223X	MG RESISTOR	22kΩ 1/16W J
R7047	NRSA63J-0R0X	MG RESISTOR	0Ω 1/16W J
R7049	NRSA63J-0R0X	MG RESISTOR	0Ω 1/16W J
R7051	NRSA63J-0R0X	MG RESISTOR	0Ω 1/16W J
R7052	NRSA63J-473X	MG RESISTOR	47kΩ 1/16W J
R7054	NRSA63J-0R0X	MG RESISTOR	0Ω 1/16W J
R7055	NRSA63J-0R0X	MG RESISTOR	0Ω 1/16W J
R7056	NRSA63J-0R0X	MG RESISTOR	0Ω 1/16W J
R7057	NRSA63J-0R0X	MG RESISTOR	0Ω 1/16W J
R7058	NRSA63J-0R0X	MG RESISTOR	0Ω 1/16W J
R7059	NRSA63J-0R0X	MG RESISTOR	0Ω 1/16W J
R7061	NRSA63J-0R0X	MG RESISTOR	0Ω 1/16W J
R7062	NRSA63J-0R0X	MG RESISTOR	0Ω 1/16W J
R7063	NRSA63J-0R0X	MG RESISTOR	0Ω 1/16W J
R7064	NRSA63J-103X	MG RESISTOR	10kΩ 1/16W J
R7065	NRSA63J-103X	MG RESISTOR	10kΩ 1/16W J
R7066	NRSA63J-562X	MG RESISTOR	5.6kΩ 1/16W J
R7067	NRSA63J-562X	MG RESISTOR	5.6kΩ 1/16W J
R7068	NRSA63J-0R0X	MG RESISTOR	0Ω 1/16W J
R7069	NRSA63J-0R0X	MG RESISTOR	0Ω 1/16W J
R7070	NRSA63J-0R0X	MG RESISTOR	0Ω 1/16W J
R7071	NRSA63J-0R0X	MG RESISTOR	0Ω 1/16W J
R7077	NRSA63J-331X	MG RESISTOR	330Ω 1/16W J
R7078	NRSA63J-331X	MG RESISTOR	330Ω 1/16W J
R7081	NRSA63J-473X	MG RESISTOR	47kΩ 1/16W J
R7084	NRSA63J-221X	MG RESISTOR	220Ω 1/16W J
R7085	NRSA63J-221X	MG RESISTOR	220Ω 1/16W J
R7086	NRSA63J-0R0X	MG RESISTOR	0Ω 1/16W J
R7087	NRSA63J-0R0X	MG RESISTOR	0Ω 1/16W J
R7088	NRSA63J-0R0X	MG RESISTOR	0Ω 1/16W J
R7089	NRSA63J-0R0X	MG RESISTOR	0Ω 1/16W J
R7090	NRSA63J-0R0X	MG RESISTOR	0Ω 1/16W J
R7091	NRSA63J-0R0X	MG RESISTOR	0Ω 1/16W J
R7092	NRSA63J-101X	MG RESISTOR	100Ω 1/16W J
R7093	NRSA63J-101X	MG RESISTOR	100Ω 1/16W J
R7094	NRSA63J-101X	MG RESISTOR	100Ω 1/16W J
R7095	NRSA63J-0R0X	MG RESISTOR	0Ω 1/16W J
R7097	NRSA63J-0R0X	MG RESISTOR	0Ω 1/16W J
R7098	NRSA63J-0R0X	MG RESISTOR	0Ω 1/16W J
R7099	NRSA63J-0R0X	MG RESISTOR	0Ω 1/16W J
R7100	NRSA63J-0R0X	MG RESISTOR	0Ω 1/16W J
R7103	NRSA63J-0R0X	MG RESISTOR	0Ω 1/16W J
R7106	NRSA63J-0R0X	MG RESISTOR	0Ω 1/16W J
R7110	NRSA63J-0R0X	MG RESISTOR	0Ω 1/16W J
R7113	NRSA63J-0R0X	MG RESISTOR	0Ω 1/16W J
R7123	NRSA63J-0R0X	MG RESISTOR	0Ω 1/16W J
R7124	NRSA63J-0R0X	MG RESISTOR	0Ω 1/16W J
R7128	NRSA63J-0R0X	MG RESISTOR	0Ω 1/16W J
R7170	NRSA63J-0R0X	MG RESISTOR	0Ω 1/16W J
R7171	NRSA63J-0R0X	MG RESISTOR	0Ω 1/16W J
R7172	NRSA63J-0R0X	MG RESISTOR	0Ω 1/16W J
R7173	NRSA63J-0R0X	MG RESISTOR	0Ω 1/16W J
R7174	NRSA63J-473X	MG RESISTOR	47kΩ 1/16W J
R7175	NRSA63J-0R0X	MG RESISTOR	0Ω 1/16W J
R7176	NRSA63J-0R0X	MG RESISTOR	0Ω 1/16W J
R7177	NRSA63J-0R0X	MG RESISTOR	0Ω 1/16W J
R7178	NRSA63J-0R0X	MG RESISTOR	0Ω 1/16W J
R7179	NRSA63J-0R0X	MG RESISTOR	0Ω 1/16W J
R7184	NRSA63J-0R0X	MG RESISTOR	0Ω 1/16W J
R7186	NCB31HK-103X	C CAPACITOR	0.01uF 50V K
R7187	NRSA63J-0R0X	MG RESISTOR	0Ω 1/16W J
R7192	NRSA63J-0R0X	MG RESISTOR	0Ω 1/16W J
R7201	NRSA63J-473X	MG RESISTOR	47kΩ 1/16W J
R7202	NRSA63J-473X	MG RESISTOR	47kΩ 1/16W J
R7203	NRSA63J-473X	MG RESISTOR	47kΩ 1/16W J
R7207	NRSA63J-101X	MG RESISTOR	100Ω 1/16W J
R7208	NRSA63J-0R0X	MG RESISTOR	0Ω 1/16W J
R7211	NRSA63J-0R0X	MG RESISTOR	0Ω 1/16W J
R7214	NRSA63J-0R0X	MG RESISTOR	0Ω 1/16W J
R7215	NRSA63J-473X	MG RESISTOR	47kΩ 1/16W J
R7216	NRSA63J-473X	MG RESISTOR	47kΩ 1/16W J
R7217	NRSA63J-473X	MG RESISTOR	47kΩ 1/16W J
R7221	NRSA63J-0R0X	MG RESISTOR	0Ω 1/16W J
R7223	NRSA63J-473X	MG RESISTOR	47kΩ 1/16W J
R7224	NRSA63J-473X	MG RESISTOR	47kΩ 1/16W J
R7225	NRSA63J-473X	MG RESISTOR	47kΩ 1/16W J
R7239	NRSA63J-103X	MG RESISTOR	10kΩ 1/16W J
R7240	NQR0599-003X	FERRITE BEADS	
R7349	NRSA63J-103X	MG RESISTOR	10kΩ 1/16W J
R7350	NRSA63J-103X	MG RESISTOR	10kΩ 1/16W J
R7351	NRSA63J-103X	MG RESISTOR	10kΩ 1/16W J
R7504	NRSA63J-104X	MG RESISTOR	100kΩ 1/16W J
R7505	NRSA63J-103X	MG RESISTOR	10kΩ 1/16W J
R7512	NRSA63J-0R0X	MG RESISTOR	0Ω 1/16W J
R7513	NRSA63J-0R0X	MG RESISTOR	0Ω 1/16W J
R7514	NRSA63J-0R0X	MG RESISTOR	0Ω 1/16W J
R7515	NRSA63J-102X	MG RESISTOR	1kΩ 1/16W J
R7601	NRSA63J-103X	MG RESISTOR	10kΩ 1/16W J
R7602	NRSA63J-103X	MG RESISTOR	10kΩ 1/16W J
R7603	NRSA63J-0R0X	MG RESISTOR	0Ω 1/16W J
R7604	NRSA63J-0R0X	MG RESISTOR	0Ω 1/16W J
R7605	NRSA63J-471X	MG RESISTOR	470Ω 1/16W J
R7606	NRSA63J-105X	MG RESISTOR	1MΩ 1/16W J
R7607	NRSA63J-682X	MG RESISTOR	6.8kΩ 1/16W J
R7608	NRSA63J-105X	MG RESISTOR	1MΩ 1/16W J
R7609	NRSA63J-0R0X	MG RESISTOR	0Ω 1/16W J
R7610	NRSA63J-0R0X	MG RESISTOR	0Ω 1/16W J
R7611	NRSA63J-102X	MG RESISTOR	1kΩ 1/16W J
R7612	NRSA63J-471X	MG RESISTOR	470Ω 1/16W J
R7613	NRSA63J-102X	MG RESISTOR	1kΩ 1/16W J
R7614	NRSA63J-0R0X	MG RESISTOR	0Ω 1/16W J
R7615	NRSA63J-0R0X	MG RESISTOR	0Ω 1/16W J
R7616	NRSA63J-0R0X	MG RESISTOR	0Ω 1/16W J
R7618	NRSA63J-0R0X	MG RESISTOR	0Ω 1/16W J
R7619	NRSA63J-0R0X	MG RESISTOR	0Ω 1/16W J
R7620	NRSA63J-102X	MG RESISTOR	1kΩ 1/16W J
R7622	NRSA63J-0R0X	MG RESISTOR	0Ω 1/16W J

⚠Ref No.	Part No.	Part Name	Description Local
R7623	NRSA63J-0R0X	MG RESISTOR	0Ω 1/16W J
R7624	NRSA63J-0R0X	MG RESISTOR	0Ω 1/16W J
R7625	NRSA63J-0R0X	MG RESISTOR	0Ω 1/16W J
R7626	NRSA63J-0R0X	MG RESISTOR	0Ω 1/16W J
R7627	NRSA63J-0R0X	MG RESISTOR	0Ω 1/16W J
R7628	NRSA63J-333X	MG RESISTOR	33kΩ 1/16W J
R7631	NRSA63J-821X	MG RESISTOR	820Ω 1/16W J
R7632	NRSA63J-222X	MG RESISTOR	2.2kΩ 1/16W J
R7634	NRSA63J-821X	MG RESISTOR	820Ω 1/16W J
R7635	NRSA63J-222X	MG RESISTOR	2.2kΩ 1/16W J
R7643	NRSA63J-0R0X	MG RESISTOR	0Ω 1/16W J
R7644	NRSA63J-0R0X	MG RESISTOR	0Ω 1/16W J
R7646	NRSA63J-0R0X	MG RESISTOR	0Ω 1/16W J
R7649	NRSA63J-103X	MG RESISTOR	10kΩ 1/16W J
R7658	NRSA63J-103X	MG RESISTOR	10kΩ 1/16W J
R7659	NRSA63J-560X	MG RESISTOR	56Ω 1/16W J
R8796	NRSA63J-0R0X	MG RESISTOR	0Ω 1/16W J
R8797	NRSA63J-0R0X	MG RESISTOR	0Ω 1/16W J
R8798	NRSA63J-0R0X	MG RESISTOR	0Ω 1/16W J
R8799	NRSA63J-0R0X	MG RESISTOR	0Ω 1/16W J
R9001	NRSA63J-473X	MG RESISTOR	47kΩ 1/16W J
R9002	NRSA02J-0R0X	MG RESISTOR	0Ω 1/10W J
R9003	NRSA63D-273X	MG RESISTOR	27kΩ 1/16W D
R9004	NRSA63J-684X	MG RESISTOR	680kΩ 1/16W J
R9005	NRSA63D-103X	MG RESISTOR	10kΩ 1/16W D
R9006	NRSA63J-512X	MG RESISTOR	5.1kΩ 1/16W J
R9007	NRSA02J-0R0X	MG RESISTOR	0Ω 1/10W J
R9008	NRSA63J-0R0X	MG RESISTOR	0Ω 1/16W J
R9201	NRSA63J-473X	MG RESISTOR	47kΩ 1/16W J
R9202	NRSA02J-0R0X	MG RESISTOR	0Ω 1/10W J
R9203	NRSA63D-302X	MG RESISTOR	3kΩ 1/16W D
R9205	NRSA63D-103X	MG RESISTOR	10kΩ 1/16W D
R9206	NRSA63J-332X	MG RESISTOR	3.3kΩ 1/16W J
R9207	NRSA02J-0R0X	MG RESISTOR	0Ω 1/10W J
R9209	NRSA63J-0R0X	MG RESISTOR	0Ω 1/16W J
R9302	NRSA02J-0R0X	MG RESISTOR	0Ω 1/10W J
R9306	NRSA02J-0R0X	MG RESISTOR	0Ω 1/10W J
R9308	NRSA63J-0R0X	MG RESISTOR	0Ω 1/16W J
R9510	NRSA63J-104X	MG RESISTOR	100kΩ 1/16W J
RA6001	NRZ0080-0R0X	NET RESISTOR	0Ω 1/16W J
RA6002	NRZ0034-0R0W	NET RESISTOR	0Ω 1/32W J x4
RA6007	NRZ0080-0R0X	NET RESISTOR	0Ω 1/16W J
RA6008	NRZ0080-0R0X	NET RESISTOR	0Ω 1/16W J
RA6009	NRZ0034-0R0W	NET RESISTOR	0Ω 1/32W J x4
RA6010	NRZ0034-0R0W	NET RESISTOR	0Ω 1/32W J x4
RA6011	NRZ0080-0R0X	NET RESISTOR	0Ω 1/16W J
RA6101	NRZ0040-220X	NET RESISTOR	22Ω 1/16W J x4
RA6102	NRZ0080-220X	NET RESISTOR	22Ω 1/16W J
RA6103	NRZ0040-220X	NET RESISTOR	22Ω 1/16W J x4
RA6104	NRZ0040-220X	NET RESISTOR	22Ω 1/16W J x4
RA6105	NRZ0080-220X	NET RESISTOR	22Ω 1/16W J
RA6106	NRZ0040-220X	NET RESISTOR	22Ω 1/16W J x4
RA6107	NRZ0080-220X	NET RESISTOR	22Ω 1/16W J
RA6108	NRZ0080-220X	NET RESISTOR	22Ω 1/16W J
RA6109	NRZ0040-470X	NET RESISTOR	47Ω 1/16W J x4
RA6110	NRZ0080-470X	NET RESISTOR	47Ω 1/16W J
RA6111	NRZ0040-470X	NET RESISTOR	47Ω 1/16W J x4
RA6112	NRZ0040-470X	NET RESISTOR	47Ω 1/16W J x4
RA6113	NRZ0080-470X	NET RESISTOR	47Ω 1/16W J
RA6114	NRZ0040-470X	NET RESISTOR	47Ω 1/16W J x4
RA6115	NRZ0080-470X	NET RESISTOR	47Ω 1/16W J
RA6116	NRZ0080-470X	NET RESISTOR	47Ω 1/16W J
RA6501	NRZ0034-0R0W	NET RESISTOR	0Ω 1/32W J x4
RA6502	NRZ0034-0R0W	NET RESISTOR	0Ω 1/32W J x4
RA6503	NRZ0034-0R0W	NET RESISTOR	0Ω 1/32W J x4
RA6504	NRZ0080-0R0X	NET RESISTOR	0Ω 1/16W J
RA6505	NRZ0080-0R0X	NET RESISTOR	0Ω 1/16W J
RA6506	NRZ0080-0R0X	NET RESISTOR	0Ω 1/16W J
RA6541	NRZ0033-0R0W	NET RESISTOR	0Ω
RA6542	NRZ0080-0R0X	NET RESISTOR	0Ω 1/16W J
RA6543	NRZ0033-0R0W	NET RESISTOR	0Ω
RA6544	NRZ0080-0R0X	NET RESISTOR	0Ω 1/16W J
RA6545	NRZ0033-0R0W	NET RESISTOR	0Ω
RA6546	NRZ0080-0R0X	NET RESISTOR	0Ω 1/16W J
RA7202	NRZ0080-473X	NET RESISTOR	47kΩ
RA7203	NRZ0080-473X	NET RESISTOR	47kΩ
RA7204	NRZ0080-473X	NET RESISTOR	47kΩ
RA7205	NRZ0080-473X	NET RESISTOR	47kΩ
RA7503	NQR0271-004X	EMI FILTER	
RA7601	NRZ0034-0R0W	NET RESISTOR	0Ω 1/32W J x4
RA7602	NRZ0034-0R0W	NET RESISTOR	0Ω 1/32W J x4
RA7603	NRZ0034-0R0W	NET RESISTOR	0Ω 1/32W J x4
RA7605	NRZ0034-0R0W	NET RESISTOR	0Ω 1/32W J x4
RA7606	NRZ0034-101W	NET RESISTOR	100Ω 1/32W J x4
L6051	NRSA02J-0R0X	MG RESISTOR	0Ω 1/10W J
L6101	NRSA02J-0R0X	MG RESISTOR	0Ω 1/10W J
L6102	NQLE3GK-220X	COIL	22uH K
L6103	NQLE3GK-220X	COIL	22uH K
L6115	NQR0499-001X	FERRITE BEADS	
L6254	NRSA02J-0R0X	MG RESISTOR	0Ω 1/10W J
L6265	NQR0499-001X	FERRITE BEADS	
L6266	NQR0499-001X	FERRITE BEADS	
L6511	NRZ0034-0R0W	NET RESISTOR	0Ω 1/32W J x4
L6512	NRZ0034-0R0W	NET RESISTOR	0Ω 1/32W J x4
L6513	NRZ0034-0R0W	NET RESISTOR	0Ω 1/32W J x4
L6514	NRZ0034-0R0W	NET RESISTOR	0Ω 1/32W J x4
L6515	NRZ0034-0R0W	NET RESISTOR	0Ω 1/32W J x4
L6516	NRZ0034-0R0W	NET RESISTOR	0Ω 1/32W J x4
L6531	NQR0199-007X	FERRITE BEADS	
L6701	NQR0413-003X	FERRITE BEADS	
L6911	NQR0499-001X	FERRITE BEADS	
L6912	NQR0499-001X	FERRITE BEADS	
L6922	NQLE3GK-220X	COIL	22uH K
L6924	NQLE3GK-220X	COIL	22uH K
L6925	NQLE3GK-220X	COIL	22uH K
L6931	NQR0499-001X	FERRITE BEADS	
L7501	NRSA63J-0R0X	MG RESISTOR	0Ω 1/16W J
L7502	NRSA63J-0R0X	MG RESISTOR	0Ω 1/16W J
L9001	NQLC8CM-150X	COIL	15uH M
L9201	NQLC8CM-150X	COIL	15uH M
L9204	NQR0562-014X	CHOKE COIL	
L9306	NRSA02J-0R0X	MG RESISTOR	0Ω 1/10W J
CN011	QGF0508F4-50X	CONNECTOR	FFC/FPC (1-50)
CN012	QGF0508F4-40X	CONNECTOR	FFC/FPC (1-40)
CN110	QGB0603L1-B0	CONNECTOR	B-B (1-110)
J8501	NNZ0117-001	CONNECTOR	DIFITAL-IN-2
J8502	NNZ0117-001	CONNECTOR	DIFITAL-IN-1
K6052	NQR0489-002X	FERRITE BEADS	
K6250	NRSA02J-0R0X	MG RESISTOR	0Ω 1/10W J
K6268	NRSA02J-0R0X	MG RESISTOR	0Ω 1/10W J
K6271	NQR0499-001X	FERRITE BEADS	
K6272	NQR0499-001X	FERRITE BEADS	
K6274	NQR0499-001X	FERRITE BEADS	
K6921	NRSA02J-0R0X	MG RESISTOR	0Ω 1/10W J
K7032	NRSA02J-0R0X	MG RESISTOR	0Ω 1/10W J
K7033	NRSA02J-0R0X	MG RESISTOR	0Ω 1/10W J
K7034	NRSA02J-0R0X	MG RESISTOR	0Ω 1/10W J
K7202	NRSA63J-0R0X	MG RESISTOR	0Ω 1/16W J
K7211	NQR0499-002X	FERRITE BEADS	
K7501	NQR0413-002X	FERRITE BEADS	
K7504	NRSA63J-0R0X	MG RESISTOR	0Ω 1/16W J
K7601	NRSA02J-0R0X	MG RESISTOR	0Ω 1/10W J
LC7505	NQR0483-005X	EMI FILTER	100uF 25V Z
LC9301	NQR0470-003X	EMI FILTER	100pF 50V
LC9303	NQR0483-005X	EMI FILTER	100uF 25V Z
LC9305	NQR0483-005X	EMI FILTER	100uF 25V Z
LC9307	NQR0483-005X	EMI FILTER	100uF 25V Z
X6250	NAX0580-001X	CXO	27.0000MHz
X6250	NAX0824-001X	CXO	27.000000MHz
X7001	NAX0669-001X	C RESONATOR	6.000MHz
X7601	NAX0613-001X	C RESONATOR	16.000MHz

SIDE CONTROL P.W. BOARD ASS'Y (SRA0L013A-M2)

REFER TO PARTS LIST IN PAGE 3-44 FOR THIS P.W. BOARD.

FRONT LED P.W. BOARD ASS'Y (SRA0L113A-M2)

REFER TO PARTS LIST IN PAGE 3-33 FOR THIS P.W. BOARD.

LAMP COVER P.W. BOARD ASS'Y (SRA0L211A-M2)

REFER TO PARTS LIST IN PAGE 3-34 FOR THIS P.W. BOARD.

TUNER P.W. BOARD ASS'Y (SRA0R013A-M2)

REFER TO PARTS LIST IN PAGE 3-34 FOR THIS P.W. BOARD.

ATSC TUNER MODULE P.W. BOARD ASS'Y (SSD-2111A-M2)

REFER TO PARTS LIST IN PAGE 3-34 FOR THIS P.W. BOARD.

REMOTE CONTROL UNIT PARTS LIST (RM-C14G-1H)

⚠	Ref.No.	Part No.	Part Name	Description	Local
		UR77EC1403A	BATTERY COVER		

PACKING

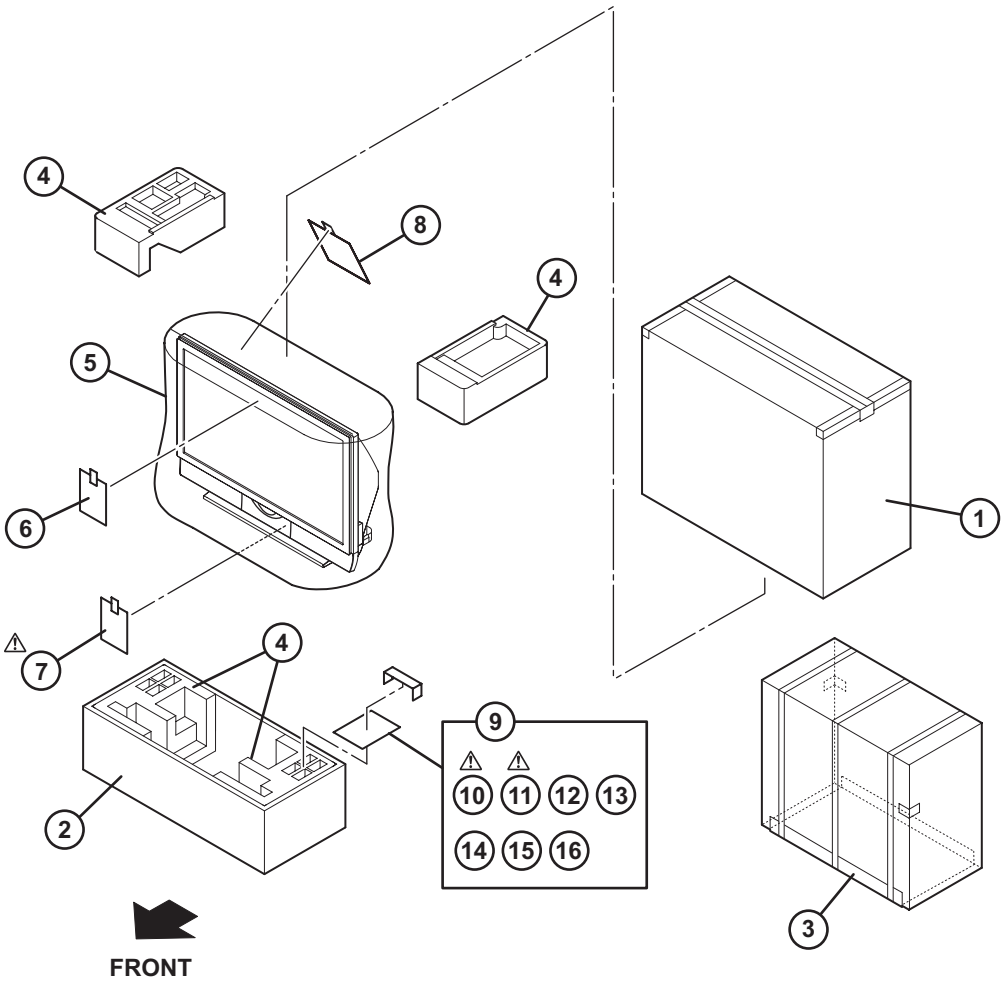

PACKING PARTS LIST

⚠	Ref.No.	Part No.	Part Name	Description	Local
	1	LC12428-005A-A	PACKING CASE		HD-56FH97,HD-56FN97
	1	LC12022-009A-A	PACKING CASE		HD-61FH97,HD-61FN97
	2	LC12726-001A-A	PACKING TRAY		HD-56FH97,HD-56FN97
	2	LC12757-001A-A	PACKING TRAY		HD-61FH97,HD-61FN97
	3	LC22203-001A-A	SUPPORT TRAY		HD-56FH97,HD-56FN97
	3	LC22205-001A-A	SUPPORT TRAY		HD-61FH97,HD-61FN97
	4	LC12723-001A-A	CUSHION ASSY	4pcs in 1set	HD-56FH97,HD-56FN97
	4	LC12754-001A-A	CUSHION ASSY	4pcs in 1set	HD-61FH97,HD-61FN97
	5	LC22040-001A-A	POLY BAG		
	6	LCT1910-001A-A	INST BOOK	English	
⚠	7	LCT1728-001B-A	INST SHEET	English/French	
	8	LCT1721-001A-A	INST SHEET	English/French	
	9	QPA02503505P	POLY BAG	25cm x 35cm	
⚠	10	LCT2067-001A-A	INST BOOK	English	
⚠	11	LCT2068-001A-A	INST BOOK	French	
	12	----------	BATTERY	R6P/AA(x2)	
	13	RM-C14G-1H	REMOTE CONTROL UNIT		
	14	BT-51041-1A	REGI. CARD		
	15	QAU0382-002	RF SPLITTER		
	16	QAM0523-003	RF CABLE	(x2)	

JVC®

HD-ILA™ Powered by D-ILA

Projection Television Users Guide

For Models:

HD-56FH97
HD-61FH97
HD-70FH97
HD-56FN97
HD-61FN97
HD-70FN97
HD-56FC97
HD-61FC97

Illustration of HD-70FH97 and RM-C14G

Important Note:

In the spaces below, enter the model and serial number of your television (located at the rear of the television cabinet). Staple your sales receipt or invoice to the inside cover of this guide. Keep this user's guide in a convenient place for future reference. Keep the carton and original packaging for future use.

Model Number: _____

Serial Number: _____

LCT2067-001A-A
0606TNH-II-IM

Important Safety Precautions

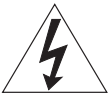

CAUTION

RISK OF ELECTRIC SHOCK DO NOT OPEN

CAUTION: To reduce the risk of electric shock. Do not remove cover (or back). No user serviceable parts inside. Refer servicing to qualified service personnel.

The lightning flash with arrowhead symbol, within an equilateral triangle is intended to alert the user to the presence of uninsulated “dangerous voltage” within the product’s enclosure that may be of sufficient magnitude to constitute a risk of electric shock to persons.

The exclamation point within an equilateral triangle is intended to alert the user to the presence of important operating and maintenance (servicing) instructions in the literature accompanying the appliance.

WARNING: TO PREVENT FIRE OR SHOCK HAZARDS, DO NOT EXPOSE THIS APPARATUS TO RAIN OR MOISTURE.

CAUTION: TO INSURE PERSONAL SAFETY, OBSERVE THE FOLLOWING RULES REGARDING THE USE OF THIS UNIT.

1. Operate only from the power source specified on the unit.
2. Avoid damaging the AC plug and power cord.
3. Avoid Improper installation and never position the unit where good ventilation is unattainable.
4. Do not allow objects or liquid into the cabinet openings.
5. In the event of trouble, unplug the unit and call a service technician. Do not attempt to repair it yourself or remove the rear cover.

Changes or modifications not approved by JVC could void the warranty.

* When you don’t use this TV set for a long period of time, be sure to disconnect both the power plug from the AC outlet and antenna for your safety.
* To prevent electric shock do not use this polarized plug with an extension cord, receptacle or other outlet unless the blades can be fully inserted to prevent blade exposure.

NOTICE (for USA)

This product has a High Intensity Discharge (HID) lamp that contains a small amount of mercury. It also contains lead in some components. Disposal of these materials may be regulated in your community due to environmental considerations. For disposal or recycling information, please contact your local authorities, or the Electronics Industries Alliance: http://www.eiae.org

This product incorporates copyright protection technology that is protected by U.S. patents and other intellectual property rights. Use of this copyright protection technology must be authorized by Macrovision, and is intended for home and other limited viewing uses only unless otherwise authorized by Macrovision. Reverse engineering or disassembly is prohibited.

Some pay-per-view programs may be licensed from producers as "view-only" programs. These are copyrighted programs and may not be copied or reproduced for any purpose without the express written permission of the copyright owner.
For best viewing, if your VCR is "ON", turn the TV/VCR switch to the "TV" position.

IMPORTANT SAFETY INSTRUCTIONS

1) Read these instructions.
2) Keep these instructions.
3) Heed all warnings.
4) Follow all instructions.
5) Do not use this apparatus near water.
6) Clean only with dry cloth.
7) Do not block any ventilation openings. Install in accordance with the manufacturer's instructions.
8) Do not install near any heat sources such as radiators, heat registers, stoves, or other apparatus (including amplifiers) that produce heat.
9) Do not defeat the safety purpose of the polarized or grounding-type plug. A polarized plug has two blades with one wider than the other. A grounding type plug has two blades and a third grounding prong. The wide blade or the third prong are provided for your safety. If the provided plug does not fit into your outlet, consult an electrician for replacement of the obsolete outlet.
10) Protect the power cord from being walked on or pinched particularly at plugs, convenience receptacles, and the point where they exit from the apparatus.
11) Only use attachments/accessories specified by the manufacturer.
12) Use only with a cart, stand, tripod, bracket, or table specified by the manufacturer, or sold with the apparatus. When a cart is used, use caution when moving the cart/apparatus combination to avoid injury from tip-over.

13) Unplug this apparatus during lightning storms or when unused for long periods of time.

14) Refer all servicing to qualified service personnel. Servicing is required when the apparatus has been damaged in any way, such as power-supply cord or plug is damaged, liquid has been spilled or objects have fallen into the apparatus, the apparatus has been exposed to rain or moisture, does not operate normally, or has been dropped.

15) Apparatus shall not be exposed to dripping or splashing and no objects filled with liquids, such as vases, shall be placed on the apparatus.

16) Avoid improper installation and never position the unit where good ventilation is impossible. When installing this TV, distance recommendations must be maintained between the set and the wall, as well as inside a tightly enclosed area or piece of furniture. Keep to the minimum distance guidelines shown for safe operation.

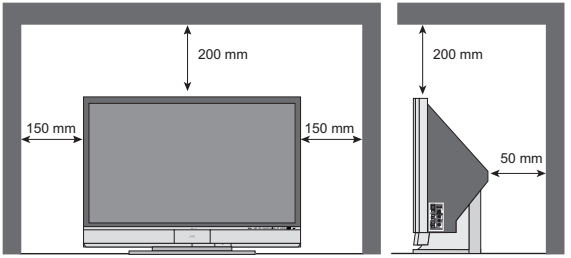

17) Cautions for installation

— Do not tilt the TV towards the left or right, or towards the back.
— Install the TV in a corner on the floor so as to keep cords out of the way.
— The TV will generate a slight amount of heat during operation. Ensure that sufficient space is available around the TV to allow satisfactory cooling.

18) Make enough room for inserting and removing the power plug. Place the TV as close to the outlet as possible. The main power supply for this TV is controlled by inserting or removing the power plug.

FCC Notice:

Note: This equipment has been tested and found to comply with the limits for a Class B digital device, pursuant to Part 15 of the FCC Rules. These limits are designed to provide reasonable protection against harmful interference in a residential installation. This equipment generates, uses and can radiate radio frequency energy and, if not installed and used in accordance with the instructions, may cause harmful interference to radio communications. However, there is no guarantee that interference will not occur in a particular installation. If this equipment does cause harmful interference to radio or television reception, which can be determined by turning the equipment off and on, the user is encouraged to try to correct the interference by one or more of the following measures:

– Reorient or relocate the receiving antenna.
– Increase the separation between the equipment and receiver.
– Connect the equipment into an outlet on a circuit different from that to which the receiver is connected.
– Consult the dealer or an experienced radio/TV technician for help.

• FCC notice is only for HD-56FH97, HD-61FH97, HD-70FH97, HD-56FN97, HD-61FN97 and HD-70FN97.

Warnings

Caring for the Cabinet

Normally, light dusting with a soft, non-scratching duster will keep your TV clean.

If you wish to wipe down the television, first unplug it. Then wipe gently with a soft cloth, slightly moistened with water. You can add a few drops of mild liquid detergent to the water to help remove spots of oily dirt.

- DO NOT allow liquid to enter the TV through the ventilation slots.
- DO NOT use strong or abrasive cleaners on the TV.
- DO NOT spray liquids or cleaners directly on the TV's surface.
- DO NOT rub or scrub the TV harshly. Wipe the set gently with a soft cloth.

Caring for the Screen

The screen is treated with an electrostatic-proof coating. When it gets dirty, wipe it gently with a soft cloth. If the screen is very dirty, wipe it down with a cloth dipped in a diluted kitchen cleaner and thoroughly wrung-out. Then wipe immediately after with a clean, dry cloth.

Do not apply alcohol, organic solvents (like acetone), acidic or alkaline cleansers to the screen. These will remove the coating layer and cause discolorations.

Do not push or hit the screen. This could cause scratches on the screen surface and image distortions.

Warnings

Thank you for purchasing a JVC HDTV-ready projection television which uses the high-quality HD-ILA projection system. This is one of the highest quality and most technologically advanced televisions available today. It is recommended that you read this instruction manual before using your television in order to learn about it's many features. Cautions related to the safe use of the device and important information which will help you to be able to use this device for a long time is in the Appendix. Once again, thank you for purchasing this television and please enjoy using it.

In order to use the television for a long time

This television uses a lamp to project the picture onto the screen. Before using this television, please read the safety cautions and information about this television which are summarized below.

1. When the power is turned on, the warming up commences

This television uses a lamp to project the picture onto the screen. Once the lamp has warmed up, you can enjoy the pictures at their full brightness. What happens when the power is turned on is explained below. Immediately after the power is turned on, since the lamp has not had time to warm up, the picture is displayed only dimly on the screen. As the lamp warms up, the picture becomes brighter. It takes approximately one minute for the lamp to warm up to it's normal operating temperature. There are 2 LED indicators on the front panel of the television that can be used as a guide. When the POWER button is pressed, the LAMP/PROGRAM LED indicator blinks in orange for approximately 1 minute at approximately every 2 seconds, and then goes out.

Note: It is impossible to turn the power off during this period. After 1 or more minutes have passed, you can turn off the power.

2. Cooling the inside of the television and the lamp

Cooling is also performed while the television is being shut down.
When the POWER button is pressed to turn off the power, the following operations are performed. When the television is turned off, the picture on the screen disappears. Once the screen is dark, cooling is performed for approximately 1 minute. When the cooling is being performed, the LAMP/PROGRAM LED indicator on the front panel blinks in orange at approximately every 3 seconds. **The television can not be operated while the cooling is being performed.** After the cooling has been performed for 1 minute, the power is turned off. **Do not remove the electrical plug until after the cooling process has completed.** If the electrical plug is removed before the cooling process has completed, the internal circuits and lamp may overheat leading to the life of the lamp being shortened and the possibility of malfunctions.

Do not block the ventilation holes.
Do not block the ventilation holes while the power is turned on. Do not block the air intake holes behind the speaker grills.

3. The lamp is a consumable item

Replace the lamp when it has blown or when the picture becomes dark. The lamp is a user replaceable item. The lamp must be recycled. For a detailed explanation on how to recycle the lamp, refer to the Appendix and the instructions that are included with the replacement lamp kit. The life of the lamp changes depending on the atmospheric temperature and altitude in which the TV is being used.

Warnings

4. The television requires a lot of electrical power

It is recommended that the television is connected directly to the wall socket, and not to another device. When connecting the television to a wall socket that is being used by another device, or when using an extension cord, be careful not to exceed the electrical capacity of the socket.

Do not turn the power on and off repeatedly in a short amount of time.
It subjects the television and the lamp to stress and may lead to malfunctions and the life of the lamp being shortened.

5. The screen is made of plastic

Handle the screen very carefully as it can scratch easily. Do not rub, hit or press on it with any hard objects. When the screen is dirty, gently wipe it with a soft cloth. Refer to the Appendix for details on how to clean the screen.

6. Caution! Warm air from the air ducts

This unit has an air duct for cooling. The duct will blow warm air while the television is operating. When placing the television, make sure not to locate it too close to wallpaper. The warm air could cause the color of the wallpaper to change. Also, take care to keep children and pets away from the warm air ducts. Long exposure to the warm air from the ducts could cause a minor burn.

7. Caution! Moving this television

When lifting this television, Do not hold by the screen frame. Holding the screen frame could cause it to detach, causing the television to fall.

8. Do not replace the lamp immediately after use

The lamp becomes extremely hot during use. If the lamp is touched immediately after use before it has a chance to cool down, there is a danger of burns. Be careful when handling the lamp.

9. Do not touch the lamp glass

If the lamp is used when there is dirt from fingers on the lamp glass, there is a possibility of the lamp breaking. Be careful not to touch the lamp glass.

10. ILA element characteristics

Do not project still pictures or pictures that have still segments for a long period of time. The still parts of the picture may remain on the screen. This is a characteristic of ILA elements and not a malfunction. The picture will disappear over time.

11. Condensation

When a heater is turned on or the television is moved from a cold place to a hot place, droplets of water may form on the lamp and screen. This is called condensation. If the television is used while this condensation is still present, the picture may seem distorted, and the inside of the screen may become dirty. In this case, wait until the condensation has gone before using the television.

12. Do not open the rear cabinet of this television

This television has a DIGITAL-IN terminal. Opening up the rear cabinet will violate the copyright of the program or software shown on the television. Please do not open the rear cabinet.

13. Usable Time

Do not keep the TV on for more than 24 hours consecutively. There is a possibility of the life of the lamp being shortened.

Table of Contents

Important Safety Precautions . . 2
Warnings 5
Quick Setup 9
Unpacking your TV 9
TV Models 10
TV Remote Control 12
Getting Started 13
The Remote Control 13
Connecting Your Devices 14
Interactive Plug In Menu 27
Programming your remote 30

Onscreen Menus 34
Using the Guide 34
Onscreen Menu System 35
Initial Setup 37
Auto Tuner Setup 37
Channel Summary 38
Channel Label 39
V-Chip 40
Set Lock Code 46
Language 47
Closed Caption 47
Auto Shut Off 50
XDS ID 50
Noise Muting 50
Front Panel Lock 51
V1 Smart Input 51
Video Input Label 52
Position Adjustment 53
Power Indicator 53
Video-1 Monitor Out 54
TV Speaker 54
Audio Out 54
Digital-In 55
Digital-In1 Audio 55
Center CH Input 56
Digital Setup 56
Antenna Level 57
Digital Sound 57
Aspect Ratio 57
Cable Card Application 58
i.LINK Auto Play 58
Software Update 58
Picture Adjust 59
Picture Settings 59
Color Temperature 59
Color Management 60
Dynamic Gamma 60
Advanced Smart Picture 60
Digital VNR 61
MPEG NR 61
Reset 61
Sound Adjust 62
Sound Settings 62
Turn On Volume 62
Volume Limit 62
Reset 62
Clock/Timers 63
Set Clock 63
On/Off Timer 64
Lamp Timer Reset 65

Button Functions 66
Multi Screen Function 66
Twin 66
Index 67
Freeze 67
Swap 67
Select 67
Power 68
Number Buttons 68
Tune 68
Input 68
Channel +/- 69
Volume +/- 69
TheaterPro D6500K 69
Return+/TV 69
Sound 70
Muting 70
Video Status 71
Natural Cinema 71
Sleep Timer 72
ML/MTS 72
Display 73
C.C. 73
Favorite 74
Aspect 75
Aspect Ratios 75
Menu 76
OK 76
Back 76
TV/CATV Slide Switch 77
VCR/DVD Slide Switch 77
VCR Buttons 77
DVD Buttons 77
Light 77
D/A (Digital/Analog) 78
Sub Channel 78
Guide 78
i.LINK Menu 79
Timer 81

OSD Information 83
Cable Card Information 84
Lamp Replacement 85
Troubleshooting 90
Specifications 92
Warranty 94
Authorized Service Center . . . 95

Unpacking your TV

Thank you for your purchase of a JVC Color Television. Before you begin setting up your new television, please check to make sure you have all of the following items. In addition to this guide, your television box should include:

Television x 1

Remote Control x 1

AA Batteries x 2

Note: Your television and/or remote control may differ from the examples illustrated here.

Two Way Splitter x 1

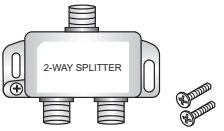

RF Cables x 2

We recommend that before you start using your new television, you read your entire User's Guide so you can learn about your new television's many great features. If you're anxious to start using your television right away, a quick setup guide follows on the next few pages.

Quick Setup

TV Models

Before you connect your television to another device, please refer to the proper diagrams for your specific TV and remote. These will help assist you in understanding how to connect your television to another device, as well as use the remote to set up your television.

Rear Panel Diagram

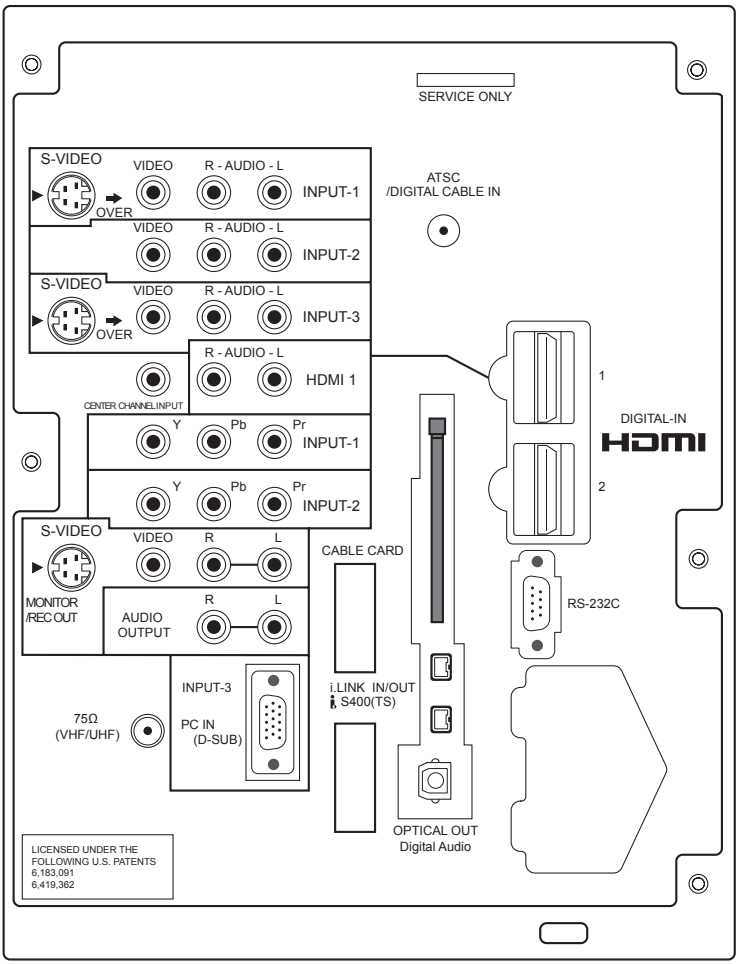

Notes:

- The terminal labeled "SERVICE ONLY", is exclusively used to update the software version.
- For governing the usage of the RS-232C terminal, consult your dealer. (HD-56FH97, HD-61FH97 or HD-70FH97 ONLY)
- HD-56FC97 or HD-61FC97 does not have PC IN terminal and CENTER CHANNEL INPUT terminal.

Front Panel Diagram

Models: HD-56FC97, HD-61FC97, HD-70FH97, HD-70FN97

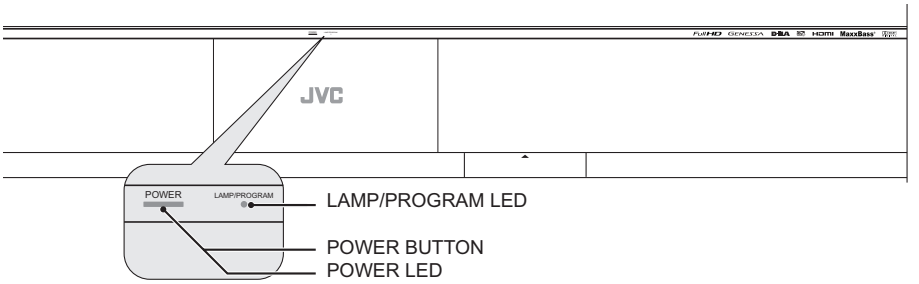

Models: HD-56FH97, HD-61FH97, HD-56FN97, HD-61FN97

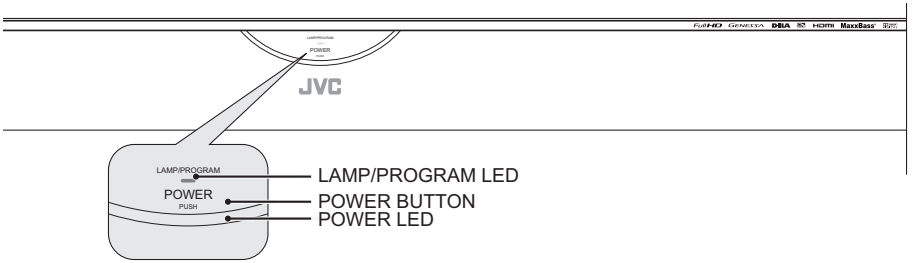

• For information on the LED, see page 89.

Side Panel Diagram

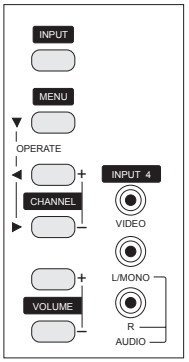

Quick Setup

Remote Control

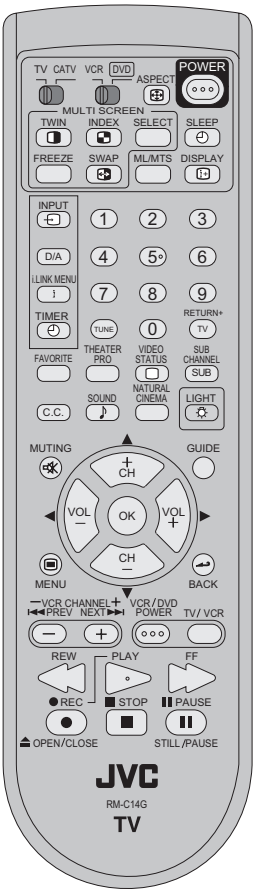

RM-C14G

- For information on remote control buttons, see pages 66 - 82.
- i.LINK MENU, TIMER, SUB CHANNEL and GUIDE buttons are for digital channels. If your TV is connected to an ATSC antenna or Digital Cable, you can use these buttons.

Getting Started

These quick setup pages will provide you, in three easy steps, with the basic information you need to begin using your new television right away. If you have questions, or for more detailed information on any of these steps, please consult other sections of this manual.

Step 1 – The Remote Control

Before you can operate your remote control, you first need to install the batteries (included).

Slide the cover on the back of the remote down towards the bottom of the remote control. Insert two batteries (included) carefully noting the "+" and "–" markings, placing the "–" end in the unit first. Slide the cover back into place.

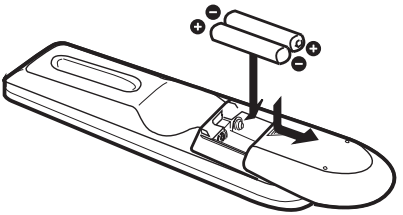

When you change the batteries, try to complete the task within three minutes. If you take longer than three minutes, the remote control codes for your VCR, DVD, and/or cable box/satellite receiver may have to be reset. See pages 30 - 33.

Key Feature Buttons

The four key feature buttons at the center of the remote can be used for basic operation of the television. The top and bottom buttons will scan forward and back through the available channels. To move rapidly through the channels using JVC's **Hyperscan** feature, press and hold CH+ or CH–. The channels will zip by at a rate of five channels per second. The right and left buttons will turn the volume up or down. These buttons are also marked with four arrows and are used with JVC's onscreen menu system. To use the onscreen menus, press the MENU button.

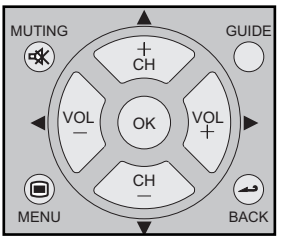

Basic Operation

Turn the television on and off by pressing the POWER button at the top right corner of the remote. The POWER LED will light blue. If this is the first time you are turning on the TV, the interactive plug-in menu appears.

- Make sure the TV/CATV switch is set to TV. Move the switch to CATV only if you need to operate a cable box.

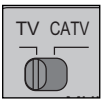

- Slide the VCR/DVD selector switch to VCR to control a VCR. Slide to DVD to control a DVD player. Please see pages 30 to 33 for instructions on programming your remote control to operate a cable box, VCR or DVD player.

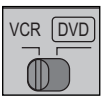

Note:

- If the lamp replacement message appears when you turn the television ON, see page 86.

Step 2 – Connecting Your Devices

To make these connections, you will use plugs like the ones illustrated below.

Coaxial Cables

Used to connect an external antenna or cable TV system to your TV.

Component Cables Composite Cables Audio Cables

Used to connect audio/ video devices like VCRs, DVD players, stereo amplifiers, game consoles, etc.

S-Video Cable

Used to make video connections with S-Video VCRs, Camcorders and DVD players.

Notes:

- These connections are examples.
- After you are finished connecting your devices, plug the power cord into the nearest power outlet and turn on the TV.
- If you follow these diagrams and the television does not work properly, contact your local cable operator.
- To connect a DVD player, see VCR Connection. A DVD player is optional
- If you have a satellite television system, refer to the satellite TV manual.

No VCR Connection

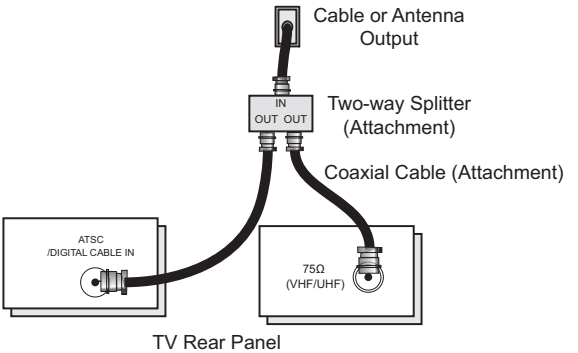

TV Rear Panel

VCR Connection

Notes:

- Green, blue and red are the most common colors for DVD cables. Some models may vary colors. Please consult the user's manual for your DVD player for more information.
- Be careful not to confuse the red DVD cable with the red audio cable. It is best to complete one set of connections (DVD or audio output) before starting the other to avoid accidentally switching the cables.
- You may also connect the DVD player to Input 1.

Diagram #1

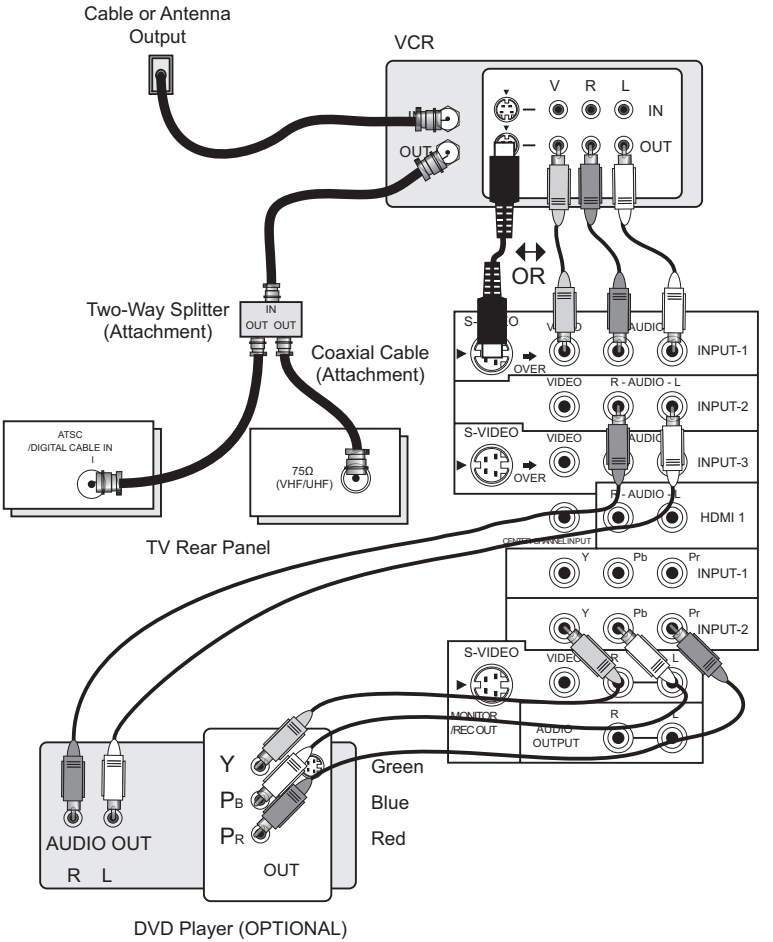

Note:

- If this connection setup does not work for you, try the connection setup on page 16.

Quick Setup

Diagram #2

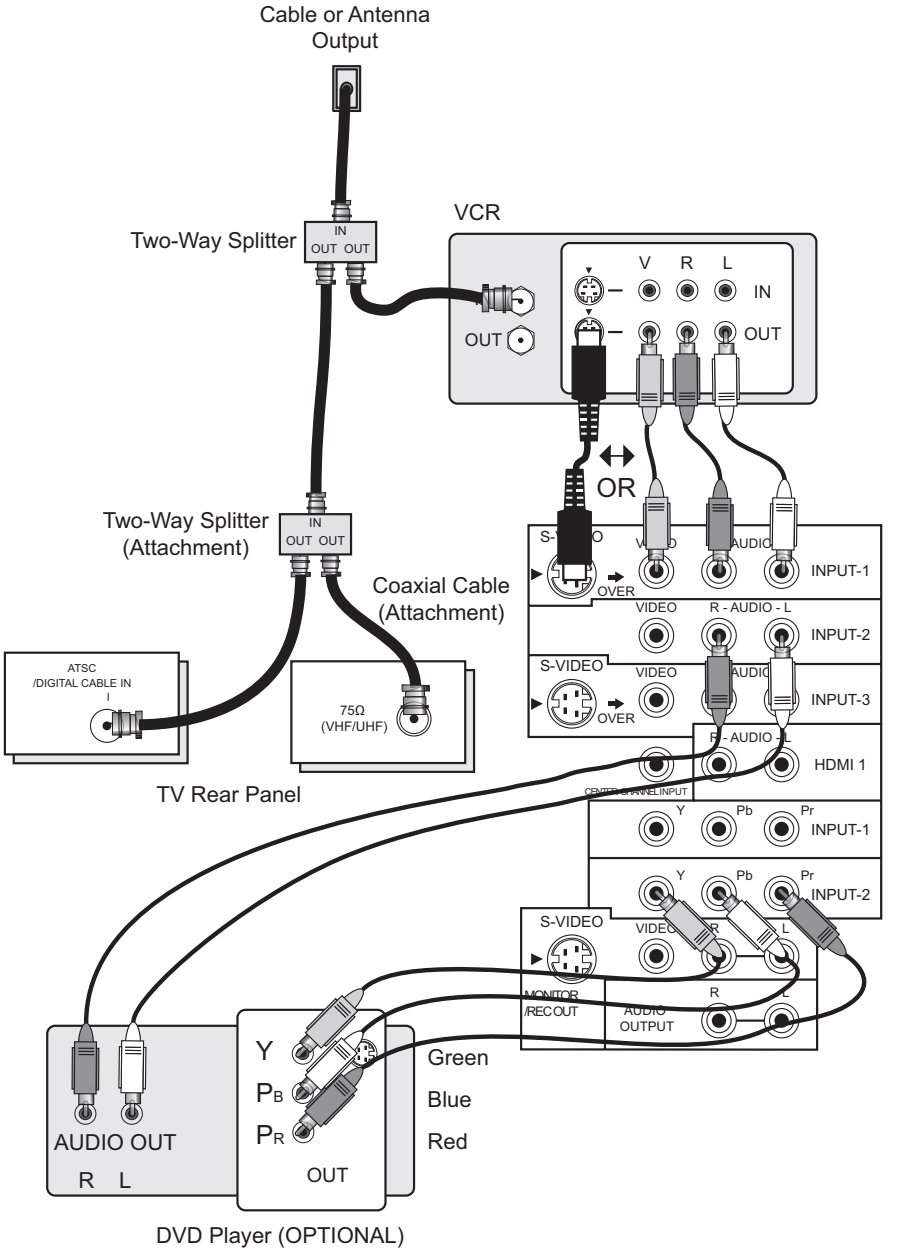

Connecting to Monitor/Recording Output Terminal

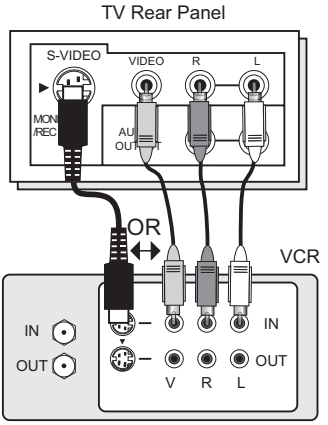

Notes:

- When you make this connection, set the Video-1 Monitor Out menu to ON. See page 54.
- If you are receiving ATSC/Digital Cable signal, it can be outputted to the S-Video output terminal or Video (composite video) terminal.
- If you are receiving Analog TV signal, it can not be outputted to the S-Video output terminal.
- No signal will be outputted through the S-Video output terminal when you are not viewing images coming from the composite video input terminal.
- No signal will be outputted through the Monitor/Recording output terminal when you are viewing images from the component video input.
- If you try and record copyright protected programs using a VCR, you will not be able to record correctly. This is because of the copyright protection system. If you are watching a copyright protected program using a VCR, the picture will be distorted on the TV. This is due to the copyright protection system, and is not a malfunction of your TV.

Connecting to a Camcorder

You may connect a camcorder, game console or other equipment to your television by using the side input jacks (Input 4) located on the side of the television. You can also connect these using the television's rear input jacks, using the same instructions.

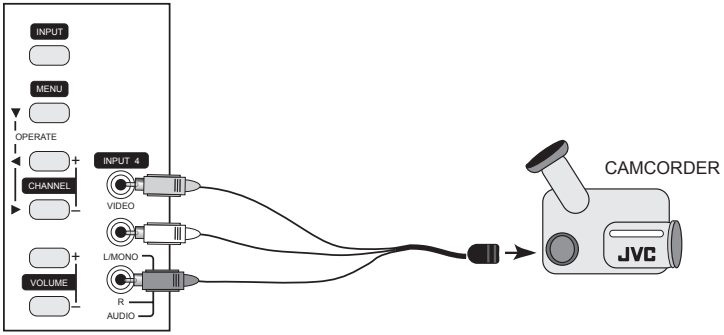

1) Connect a yellow composite cable from the camcorder VIDEO OUT, into the VIDEO IN on the side of the TV.
2) Connect a white cable from the camcorder LEFT AUDIO OUT, into the LEFT AUDIO IN on the side of the TV.
3) Connect a red cable from the camcorder RIGHT AUDIO OUT, into the RIGHT AUDIO IN on the side of the TV.

Note:

- If your camcorder is a mono sound model it will have only one AUDIO OUT. Connect it to the L/MONO on the side of the TV.

Connecting to the Surround Amplifier

(HD-56FH97, HD-61FH97, HD-70FH97, HD-56FN97, HD-61FN97, HD-70FN97 ONLY)

In multi-channel sound such as 5.1 channel, the speech characters are played back from the center speaker. A center speaker in a movie theater is set in back of the screen so it can recreate a conversation scene in the movie more naturally. By using your TV's speaker as the center speaker, you can obtain the same sound effect as in a movie theater in you home theater sound system.

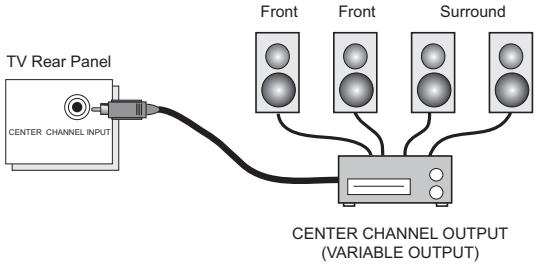

1) Connect the Pin cable from the TV's CENTER CHANNEL INPUT terminal to the surround amplifier's CENTER CHANNEL OUTPUT terminal.

Note:

• Please read the benefit of this feature on page 56.

Connecting to an External Amplifier

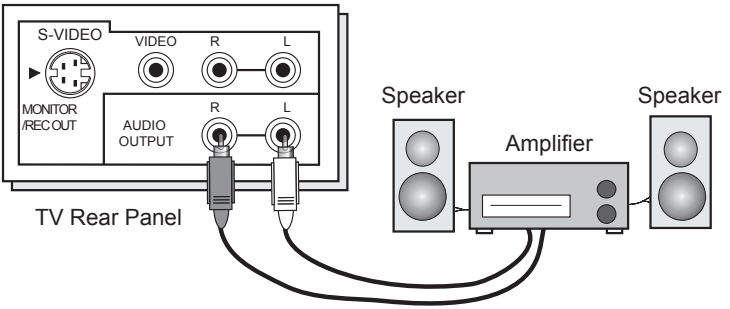

1) Connect a white cable from the LEFT AUDIO OUTPUT on the back of the TV to the LEFT AUDIO INPUT on the amplifier.
2) Connect a red cable from the RIGHT AUDIO OUTPUT on the back of the TV to the RIGHT AUDIO INPUT on the amplifier.

Notes:

• Refer to your amplifier's manual for more information.
• You can use AUDIO OUTPUT for your home theater system.
• You can not output audio using the AUDIO OUTPUT under the following conditions:
  1) When you have digital sound from an HDMI device connected to the HDMI 1 or HDMI 2 connection on the back of your TV. (See page 22).
  2) When you have analog sound from a DVI device connected to the AUDIO IN "HDMI 1" connection. (See page 21).

Connecting to an amplifier using your optical output

You can connect an amplifier that has an optical digital input terminal by using an optical digital cable from the optical output. The signal that is output can be PCM or Dolby Digital.

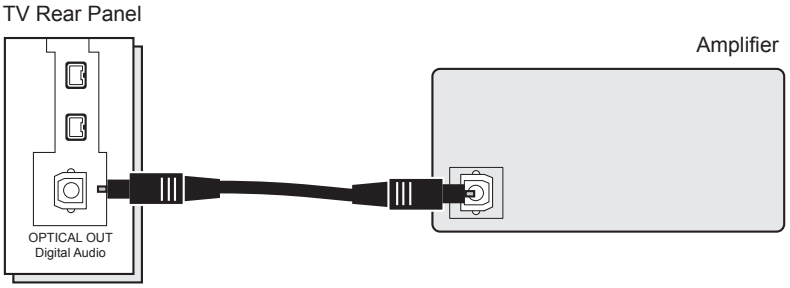

1) Connect the optical cable from the back of the TV to the back of the amplifier.

Notes:

- This terminal can only output digital audio.
- In order to use the optical output connection, select PCM or Dolby Digital on Digital Sound in the Digital Setup Menu. See page 57.
- Refer to your owners manual on using your amplifier.

Connecting to a Digital TV Receiver

By connecting a Digital TV Receiver, high definition pictures can be displayed on your TV in their digital form.

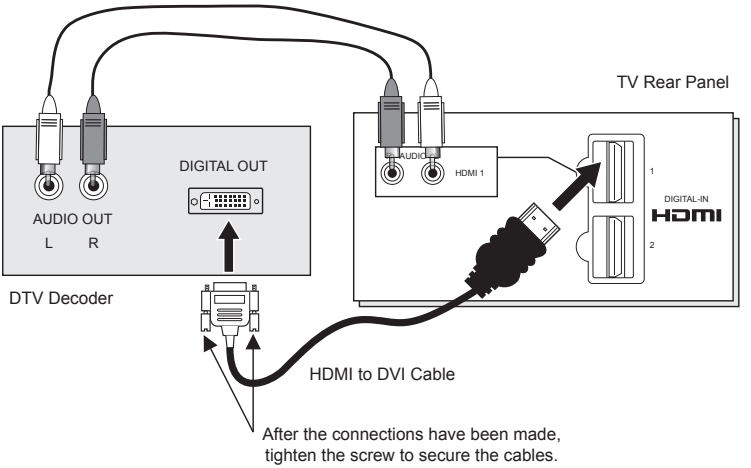

1) Connect the HDMI to DVI Cable from the DIGITAL OUT on the back of your DTV decoder, to the HDMI1 DIGITAL-IN on the back of your television.
2) Connect a red cable from the "R AUDIO OUT" on the back of your DTV Device, to the HDMI 1 "R AUDIO" input terminal.
3) Connect a white cable from the "L AUDIO OUT" on the back of your DTV Device, to the HDMI 1 "L AUDIO" input terminal.

- The digital-in terminal is not compatible with the picture signal of a personal computer.
- Use a HDMI to DVI cable (commercially available) in order to digitally connect the television with a DTV decoder.

Notes:

- If 480p signals (640x480 or 720x480) are displayed on the screen, the horizontal balance may be slightly shifted. Access the “DIGITAL-IN” in the initial setup menu to adjust it. (Refer to page 55.)
- When you do the above connection, set DIGITAL-IN1 AUDIO in the Initial Setup menu to ANALOG. See "DIGITAL-IN1 AUDIO", page 55.
- The Analog Audio input can only be used with the HDMI 1 input.
- When setting the “DIGITAL AUDIO – ANALOG / DIGITAL” menu setting on the TV, please note that this setting only effects the HDMI 1 jack and that if you use a DVI to HDMI adapter this connection must be made to the HDMI 1 along with analog audio cables.

Connecting to an HDMI Compatible Device

By connecting an HDMI compatible device, high definition pictures can be displayed on your TV in their digital form. Some HDMI devices can include DVD players, D-VHS or any HDMI compatible devices.

HDMI (High Definition Multimedia Interface) is the first industry supported, uncompressed, all digital audio/video interface. HDMI provides and interface between any audio/video source, such as a set-top box, DVD player, A/V receiver or an audio and/or video monitor, such as a digital television (DTV).

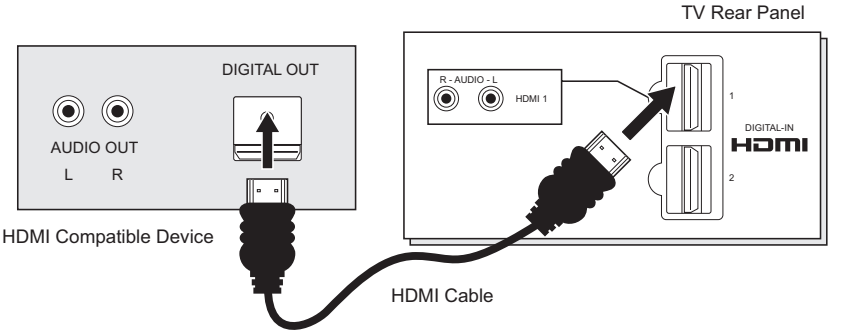

1) Connect the HDMI Cable from the DIGITAL OUT on the back of your DTV or HDMI device, to the DIGITAL-IN on the back of your television.

Notes:

- When you do the above connection, set DIGITAL-IN1 AUDIO in the Initial Setup menu to DIGITAL. See "DIGITAL-IN1 AUDIO", page 55.
- Some decoders may not respond depending on the equipment that you have connected when it is connected to the HDMI.
- If the HDMI output device signal is changed (for example, 480i/60Hz is changed to 480p/60Hz), the screen may turn green and there may be some distortion for a short time until the signal becomes stable.
- When you have an HDMI device connected to the HDMI 1 connection on the back of your TV, your TV detects it, and blocks the analog audio signal coming into the "HDMI 1" jacks. Therefore, you can not hear any analog sound from the other device conected to the "HDMI 1" jacks, while you are viewing the images from the HDMI device.

Connecting to an AV Receiver using your television's V1 Smart Input

By connecting your AV Receiver to your television's V1 Smart Input, you can watch picture sources from many different devices, without having to change or use the other input connections on your TV. This allows you to free up the other input connections so you can connect more devices to your television.

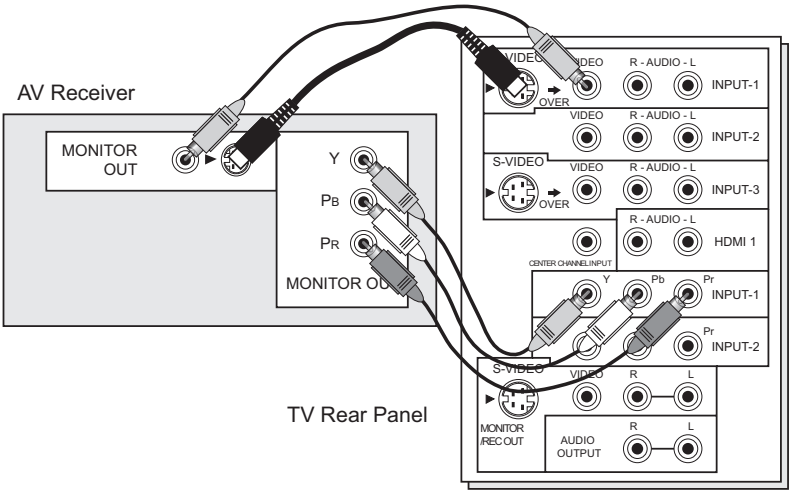

1) Connect an S-Video Cable from the AV Receiver's MONITOR OUT, to the S-Video INPUT-1 on the back of your television.
2) Connect a Yellow Composite Cable from the AV Receiver's MONITOR OUT, into the VIDEO INPUT-1 on the back of your television.
3) Connect a Green Component Cable from the AV Receiver's Y MONITOR OUT, into the Y VIDEO INPUT-1 on the back of your television.
4) Connect a Blue Component Cable from the AV Receiver's PB MONITOR OUT, into the Pb VIDEO INPUT-1 on the back of your television.
5) Connect a Red Component Cable from the AV Receiver's PR MONITOR OUT, into the Pr VIDEO INPUT-1 on the back of your television.

Note:

- Please refer to your AV Receiver instruction manual for more information on connecting your speakers and other devices like a DVD player.
- Use your AV Receiver's remote to switch to the different devices you have connected.
- Some AV Receivers may not respond when the V1 Smart Input function is turned on.
- If you have video connections for each input device connected to your AV Receiver, you should not connect them using both S-Video and Composite connection at the same time when you are using V1 Input as the V1 Smart Input. In this case we recommend using the S-Video connection.

Connecting an i.LINK compatible device to the back of your television

i.LINK is a digital serial interface that allows devices equipped with an i.LINK connector to exchange digital video signals, digital audio signals and device control signals bi-directionally over a single cable. (For example, a JVC D-VHS VCR).

i.LINK refers to the IEEE1394-1995 industry specification and extensions thereof. The i logo is used for products compliant with the i.LINK standard.

This projection television uses a four-pin i.LINK connector to input and output MPEG2 video signals, audio signals and control signals.

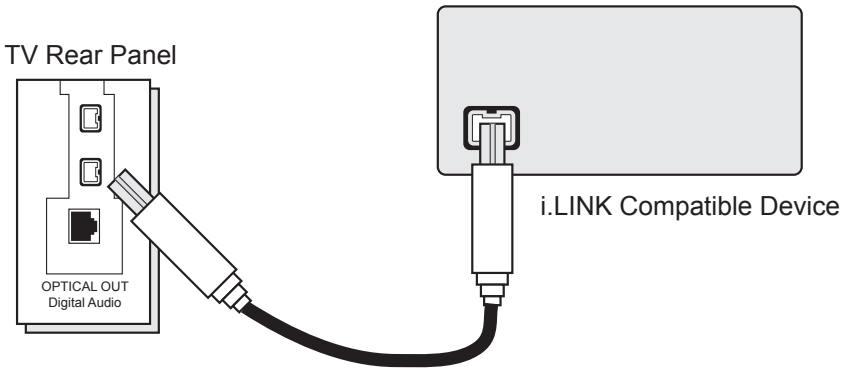

1) Connect the i.LINK cable from the back of the TV to the back of the i.LINK compatible device.

Notes:

- Use only the S400 i.LINK cable when connection your devices.
- See page 58 on how to select the i.LINK device.
- Refer to your owners manual on using your i.LINK device.
- When recording or playing back video with an i.LINK device, if you perform the Auto Tuner Setup, the video signal you are recording or playing back may stop or you may not be able to perform the Digital Auto Tuner Setup.
- Your television can connect with i.LINK D-VHS decks and HD-Camcorders (JVC brand only). If you connect other brand devices, with i.LINK cable, they will not work.
- It can play only the recorded contents in Digital Mode.
- Use only tapes bearing the DVHS (SVHS) mark for recording.

Connecting to the computer

(HD-56FH97, HD-61FH97, HD-70FH97, HD-56FN97, HD-61FN97 and HD-70FN97 ONLY)

This TV can be used as a computer screen. Use a commercially available D-SUB cable to connect the TV's PC INPUT terminal to the computer's analog RGB output terminal. If you want to listen to the sound from the computer, use a commercially available RCA cable to connect the INPUT-3 audio input terminal to the computer's audio output terminal.

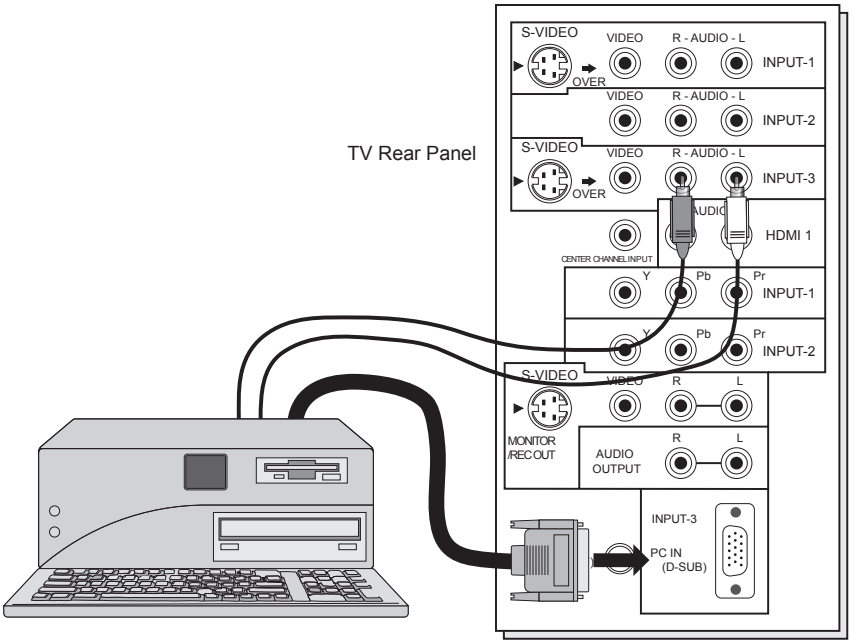

Notes:

- Refer to your computer manual for a detailed explanation of the connections concerning your computer.
- Make sure that the connectors are facing the correct way when connecting.
- After connecting, tighten the two screws to fix the connectors in place.

Looking at the images from a computer

After starting the computer, press the INPUT button to choose INPUT-3. You can listen to the sound when the sound from the computer is connected to the INPUT-3 AUDIO input terminal.

Notes:

- When the sound from the computer is connected to INPUT-3 by choosing external input INPUT-3, the sound from the computer can be listened to, but the images from the computer cannot be seen.

Table of signals for each type of computer

Resolution	Vertical Frequency (Hz)	Horizontal Frequency (kHz)
640 x 480 (VGA)	60.0	31.5
1024 x 768 (XGA)	60.0	48.4

- Only the above formats are supported.
- Even with the above formats at 60 Hz, some problems may be experienced depending on the quality of the synchronous signal. (Depending on the quality, some pictures may not be displayed correctly).
- Apple Macintosh* computers are not supported.

When a picture is not displayed

With some computers, some problems can be solved by changing the settings. Check the computer's refresh rate and set it to 60Hz. Computers that cannot set the refresh rate to 60 Hz, can not be used with this TV. Refer to the computer's instruction manual.

*Apple Macintosh is a registered trademark of Apple Computer, Inc.

Note:

- If you are inputting a PC signal that is invalid, "Invalid Signal" will appear on the TV screen. It appears when the input is PC and it is a single screen.

Step 3 – The Interactive Plug In Menu

When you turn your television on for the first time the interactive plug-in menu will appear. The plug-in menu helps you to get your TV ready to use by letting you set your preferences for:

- The language in which you want the onscreen menus to appear.
- Setting the TV's clock to the correct time so your timer functions will work properly. You can choose "AUTO" or "MANUAL" for setting the clock.
- The auto tuner setup of which channels you wish to receive.

We recommend you complete the interactive plug-in items before you start using your television.

Notes:

- The interactive plug-in menu setting does not appear if your TV has been turned on before. In this case use the onscreen menus to perform these settings. See pages 47, 63, 37.
- If you press the Menu button while setting up the interactive plug-in menu, it will skip over it.

Language

After the "JVC INTERACTIVE PLUG IN MENU" has been displayed, the TV automatically switches to the LANGUAGE settings. You can choose to view your onscreen menus in three languages: ENGLISH, FRANÇAIS (French) or ESPAÑOL (Spanish).

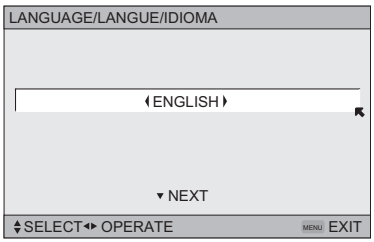

◀▶ To choose a language:
ENGLISH, FRANÇAIS or ESPAÑOL

▼ To NEXT (To set clock)

(To be continued...)

Auto Clock Set

Before you use any of your TV's timer functions, you must first set the clock. You may precisely set your clock using the XDS time signal broadcast by most public analog broadcasting stations. If you do not have this in your area, you will have to set the clock manually. See manual clock set below. To set the clock using the XDS signal:

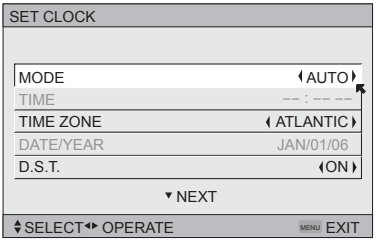

◀▶ To choose AUTO
▼ To TIME ZONE
◀▶ To select your time zone: (Atlantic, Eastern, Central, Mountain, Pacific, Alaska or Hawaii)
▼ To move to D.S.T. (Daylight Savings Time)
◀▶ To turn D.S.T. ON or OFF
▼ To NEXT (To Auto Tuner Setup)

Notes:

- D.S.T. can be used when it is set to ON in the SET CLOCK menu.
- Only when the MODE is set to AUTO, the Daylight Savings Time feature automatically adjusts your TV's clock for Daylight Savings. The clock will move forward one hour at 2:00 am on the first Sunday in April. The clock will move back one hour at 2:00 am on the last Sunday in October.
- You will have to reset the clock after a power interruption. You must set the clock before operating any timer functions.

Manual Clock Set

To set your clock manually (without using the XDS signal), choose MANUAL. If you choose AUTO, see auto clock set above.

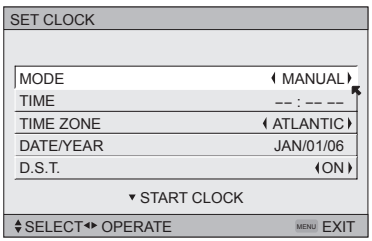

◀▶ To choose MANUAL
▼ To TIME
◀▶ To set the hour
▼ To minute
◀▶ To set the minute
▼ To TIME ZONE
◀▶ To select your time zone: (Atlantic, Eastern, Central, Mountain, Pacific, Alaska or Hawaii)
▼ To DATE/YEAR
◀▶ To set the month
▼ To day
◀▶ To set the day
▼ To year
◀▶ To set the year
▼ To move to D.S.T. (Daylight Savings Time)
◀▶ To turn D.S.T. ON or OFF
▼ To START CLOCK

Note:

- You will have to reset the clock after a power interruption. You must set the clock before operating any timer functions.

(To be continued...)

Auto Tuner Setup

In auto tuner setup, the TV automatically scans through all available channels, memorizing the active ones and skipping over blank ones or channels with weak signals. This means when you scan (using the CHANNEL +/– buttons) you will receive only clear, active channels. There are two tuner modes to choose from, ANALOG or DIGITAL.

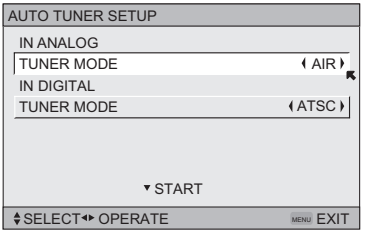

◀▶ To choose CABLE or AIR (or SKIP when you skip Analog Auto Tuner Setup)

▲▼ To TUNER MODE (IN DIGITAL)

◀▶ To choose ATSC or Digital Cable (or SKIP when you skip Digital Auto Tuner Setup)

▼ To START

After Analog Auto Tuner Setup is finished, Digital Auto Tuner Setup starts.

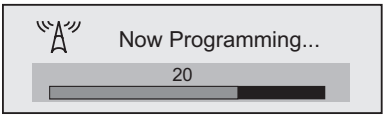

When the setup is finished, "THANK YOU ! SETUP IS NOW COMPLETE" is displayed. Your quick setup is now complete. You can now begin watching your television, or you can continue on in this guide for more information on programming your remote control, or using the JVC onscreen menu system to customize your television viewing experience.

Notes:

- If you want to cancel the Auto Tuner Setup, press the MENU button.
- Noise muting will not work during Auto Tuner Setup.
- If you choose SKIP, it finished without doing the Auto Tuner Setup.

Cable Box and Satellite Users: After your auto tuner setup is complete, you may, (depending on the type of hookup), have only 1 channel, usually 3 or 4 in the auto tuner memory. This is normal.

Remote Programming

You can program your remote to operate your cable box, satellite receiver, VCR or DVD player by using the instructions and codes listed below. If the equipment does not respond to any of the codes listed below or to the code search function, use the remote control supplied by the manufacturer.

Cable Box or Satellite Codes

The remote control is programmed with cable box and satellite codes for power on/off, channel up/down, and 10 key operation.

1) Find the cable box or satellite brand from the list of codes shown below.
2) Slide the 2-way selector switch to “CATV”.
3) Press and hold down the DISPLAY button, then enter the first code number listed with the 10 key pad.
4) Release the DISPLAY button, and confirm the operation of the cable box/satellite receiver.

- If your cable or satellite box does not respond to the first code, try the others listed. If it does not respond to any code, try the search codes function, on page 33.

Cable Box	Codes
ABC	024
Archer	032, 025
Cableview	051, 032
Citizen	022, 051
Curtis	058, 059
Diamond	024, 032, 025
Eagle	029
Eastern	034
GC Brand	032, 051
Gemini	022, 043
General Instrument/Jerrold	065, 024, 025, 026, 027, 020, 021, 022, 057, 023, 072, 074
Hamlin	040, 041, 042, 045, 058, 064
Hitachi	049, 024
Macom	049, 050, 051, 054
Magnavox	033
Memorex	030
Movietime	032, 051
Oak	039, 037, 048
Panasonic	055, 056, 060, 071, 073
Paragon	063
Philips	028, 029, 030, 052, 053, 031, 069
Pioneer	047, 062
Pulsar	051, 032

Cable Box	Codes
Puser	032
RCA	061, 070
Realistic	032
Regal	058, 064, 040, 041, 042, 045, 068
Regency	034
Rembrandt	037, 032, 051, 038
Samsung	051
Scientific Atlanta	057, 058, 059
SLMark	051, 047
Sprucer	051, 056
Stargate	032, 051
Telecaption	067
Teleview	047, 051
Texscan	044
Tocom	035, 036, 066, 074
Toshiba	050, 048
Unika	032, 025
Universal	022, 032
Videoway	052
Viewstar	029, 030
Zenith	063, 046
Zenith/Drake Satellite	046

Digital Satellite Systems	Codes
Echostar (Dish Network)	100, 113, 114, 115
Express VU	100, 113
G.E.	106
G.I.	108, 120, 121, 122
Gradiente	112
Hitachi	104, 111
HNS (Hughes)	104
Magnavox	102, 103
Panasonic	105
Philips	102, 103, 116
Primestar	108
Proscan	106, 109, 110
RCA	106, 109, 110
Sony	107
Star Choice	104, 108
Toshiba	101, 104, 117, 118, 119
Uniden	102, 103

VCR Codes

The remote control is programmed with VCR codes for power on/off, play, stop, fast-forward, rewind, pause, record, channel up/down operation.

1) Find the VCR brand from the list of codes shown below.
2) Slide the first 2-way selector switch to “TV” and the other 2-way selector switch to “VCR”.
3) Press and hold down the DISPLAY button, then enter the first code number listed with the 10 key pad.
4) Release the DISPLAY button, and confirm the operation of the VCR.

- If your VCR does not respond to the first code, try the others listed. If it does not respond to any of the codes, try the search codes function on page 33.
- After you program your remote, some VCR buttons may not work properly. If so, use the VCR’s remote.
- To record, hold down the REC button on the remote and press PLAY.

VCR	Codes
Admiral	035
Aiwa	027, 032, 095
Akai	029, 072, 073, 074
Audio Dynamic	003, 005
Bell & Howell	063, 071
Broksonic	020, 026, 094
Canon	023, 025
CCE	043
Citizen	064
Craig	063, 029, 064
Curtis Mathes	045, 024, 027, 093
Daewoo	043, 059, 024, 092
DBX	003, 004, 005
Dimensia	045, 093
Emerson	043, 026, 077, 061, 025, 042, 020, 076
Fisher	063, 066, 067, 065, 071, 091
Funai	027, 026, 020, 000
G.E.	033, 045, 024
Go Video	037, 051, 049, 050, 089
Goldstar	064
Gradiente	083, 084, 081, 000, 001
Hitachi	023, 045, 058, 093, 027, 081
Instant Replay	024, 023
Jensen	003
JVC	003, 004, 005, 000, 001, 002, 006, 007
Kenwood	003, 004, 064, 005
LG	064
LXI	027, 064, 058, 065, 066, 063, 067
Magnavox	031, 023, 024, 086
Marantz	003, 004, 005
Marta	064
Memorex	024, 067
MGA	038, 040, 047, 048, 041, 042
Minolta	058, 045, 093
Mitsubishi	038, 040, 047, 048, 041, 042, 078, 090
Multitech	047, 027, 062
NEC	003, 004, 005, 000
Olympic	024, 023
Optimus	028, 021, 035, 064
Orion	026, 020
Panasonic	023, 024, 021, 022
Penney	024, 058, 045, 063, 003, 004, 005, 093
Pentax	058, 005, 045, 093
Philco	031, 024, 027, 023, 026, 020, 043
Philips	031, 023, 024, 086
Pioneer	023
Proscan	045, 058, 023, 024, 031, 046, 059, 060, 093, 033, 087
Quasar	021, 022, 023, 024
Radio Shack	033, 024, 063, 036, 067, 040, 027
RCA	033, 045, 058, 023, 024, 031, 046, 059, 060, 083, 084, 085, 087, 093, 096
Realistic	024, 063, 036, 067, 040, 027
Samsung	037, 060, 062, 033, 089
Samtron	089
Sansui	003, 026, 020, 052
Sanyo	063, 067, 091, 071
Scott	059, 060, 062, 067, 038, 040, 047, 048, 026, 020
Sears	063, 064, 065, 066, 058
Sharp	035, 036, 080, 088
Shintom	075
Signature 2000	027, 035
Singer	075
Sony	028, 029, 030, 053, 054, 055
SV 2000	027
Sylvania	031, 023, 024, 027
Symphonic	027, 081
Tashiro	064
Tatung	003, 004, 005
Teac	003, 004, 027, 005
Technics	021, 022, 023, 024
Teknika	024, 027, 070
Thomson	033, 096
Toshiba	059, 046, 079
Vector Research	005
Wards	035, 036, 067, 044, 064
Yamaha	063, 003, 004, 005
Zenith	044, 082, 064, 094

DVD Codes

The remote control is programmed with DVD codes for power on/off, play, stop, fast-forward, rewind, previous/next chapter, tray open/close, and still/pause operation.

1) Find the DVD player brand from the list of codes shown below.
2) Slide the first 2-way selector switch to “TV” and the other 2-way selector switch to “DVD”.
3) Press and hold down the DISPLAY button, then enter the first code number listed with the 10 key pad.
4) Release the DISPLAY button, and confirm the operation of the DVD player.

- If your DVD player does not respond to the first code, try the others listed. If it does not respond to any of the codes, try the search codes function on page 33.
- After you program your remote, some DVD buttons may not work properly. If so, use the DVD player’s remote.

DVD Player	Codes	DVD Player	Codes	DVD Player	Codes
Aiwa	043	Mintek	057	Sharp	028
Apex	040, 054, 055	Mitsubishi	025	Silvania	038
Bose	058	Next Base	056	SMC	048
Denon	020, 037	Onkyo	041, 052	Sony	024, 045, 046, 047
Funai	038	Oritron	044	Technics	020
Go–Video	032	Panasonic	020	Thomson	021
Harman Kardon	053	Philips	023, 036	Toshiba	023
Hitachi	031	Pioneer	022	Venturer	051
JVC	000	Polk Audio	036	Vialta	050
Kenwood	035, 020	Raite	033	Wave	042
KLH	051	RCA	021, 026	Yamaha	020, 049
Konka	039	Sampo	034	Zenith	027, 032
Koss	050	Samsung	030		

Search Codes

Cable/Satellite Search Codes Function

1) Slide the first 2-Way Mode Selector switch to CATV.
2) Press the POWER and RETURN+/TV buttons. Hold for at least three seconds and release.
3) Press the POWER button on the remote, and see if the cable or satellite box responds.
4) If there was a response, press RETURN+/TV. The codes are now set. If there was no response, repeat Step 3. If you repeat Step 3 a total of 80 times without a response, use the remote control that came with your equipment.
5) Press RETURN+/TV to exit.

VCR/DVD Search Codes Function

1) Slide the first 2-way selector switch to “TV” and the other 2-way selector switch to “VCR” or “DVD”.
2) Press the VCR or DVD POWER and RETURN+/TV buttons. Hold for at least three seconds and release.
3) Press the VCR or DVD POWER button, and see if the VCR or DVD responds.
4) If there was a response, press RETURN+/TV. The codes are now set. If there was no response, repeat Step 3. If you repeat Step 3 a total of 80 times for the VCR (40 times for the DVD player), and there is no response, use the remote control that came with your equipment.
5) Press RETURN+/TV to exit.

Onscreen Menus

Using the Guide

Certain symbols are used throughout this guide to help you learn about the features of your new television. The ones you will see most frequently are:

▲▼ Up and Down arrows mean press the CH+ or CH– buttons. Pressing the CH+ or CH– buttons let you:
- Move vertically in a main menu screen
- Move through a submenu screen
- Move to the next letter, number, or other choice in a submenu
- Back up to correct an error
- Scan through TV channels (when not in a menu screen)

◀▶ Left and right arrows mean press the VOLUME+ or VOLUME- buttons to move left or right to:
- Select a highlighted menu item
- Select an item in a submenu
- Select numbers in certain menu options
- Turn the volume up or down (when not in a menu screen)

The "press button" icon means you should press the button named on your remote control. (Button names appear in SMALL CAPITAL LETTERS.)

The "helping arrow" icon points to the highlighted or selected item in a menu.

To bring up the onscreen menu, press the MENU button on the remote control. The item that appears in green is the one currently selected. If you use the Menu button on the TV's side panel instead of the remote, an additional menu screen showing VIDEO STATUS and ASPECT will appear between INITIAL SETUP and PICTURE ADJUST. The "interactive plug-in menu" will appear the first time the TV is plugged in.

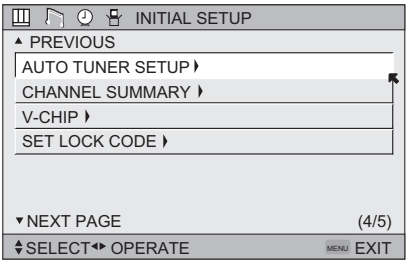

Note:

- Menus shown in this book are illustrations, not exact replications of the television's onscreen displays.

Onscreen Menus

The Onscreen Menu System

Your television comes with JVC's onscreen menu system. The onscreen menus let you make adjustments to your television's operation simply and quickly. Examples of the onscreen menus are shown on the next page. Detailed explanations on using each menu follow later in this guide. For information about the interactive plug-in Menu, see pages 27 - 29.

The Onscreen Menu System

To open the onscreen menu system, press the MENU button on the remote control. You navigate within the onscreen menus by using the four directional arrow buttons on the remote control. (These buttons are also the CH +/– and VOL +/– buttons. Channel and volume functions will not operate when the onscreen menu is active).

The selected feature and option on a menu screen are highlighted in a different color.

Selected Option (Green)

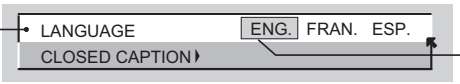

Selected Option (Blue)

To move to a different feature use the ▲▼ arrows to move up or down the list. When you press the up arrow at the top of the list or the down arrow at the bottom, the next menu screen will appear. Use the arrows ◄ ► to select an option from the highlighted feature. Pressing MENU on the remote control will close the onscreen menu system and return you to normal television viewing.

Each menu and its features will be discussed in the following pages of this guide.

Notes:

- If you do not press any buttons for about a minute, the onscreen menu will automatically shut off.
- Button names in this guide are shown in SMALL CAPITAL LETTERS.
- Menus may appear in different sizes onscreen depending on the aspect ratio selected.
- Some menu items may not appear in menu screens when certain aspect ratios or inputs are selected.

Onscreen Menus

Press the MENU button

To INITIAL SETUP 03

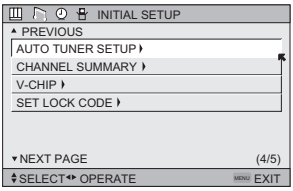

INITIAL SETUP 04

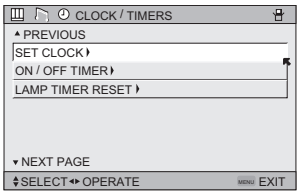

CLOCK/TIMERS

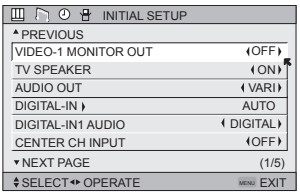

INITIAL SETUP 01

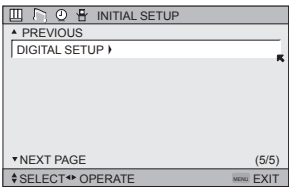

INITIAL SETUP 05

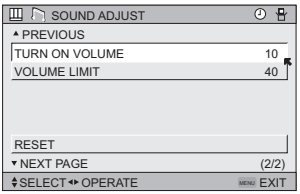

SOUND ADJUST 02

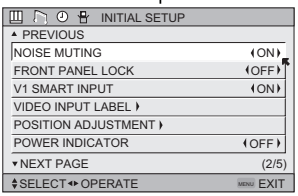

INITIAL SETUP 02

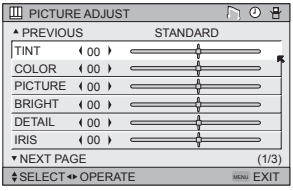

PICTURE ADJUST 01

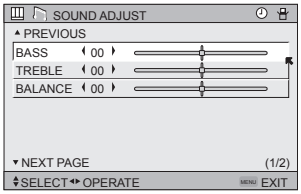

SOUND ADJUST 01

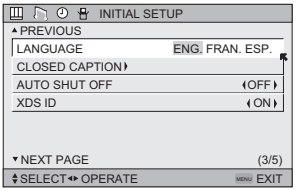

INITIAL SETUP 03

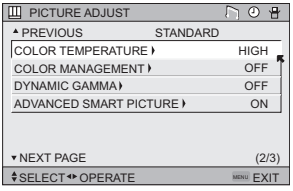

PICTURE ADJUST 02

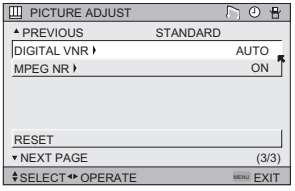

PICTURE ADJUST 03

To INITIAL SETUP 04

Notes:

- The DIGITAL-IN menu can only be displayed when a 480p picture signal is input to the digital-in terminal and the picture is being displayed on the screen.
- ADVANCED SMART PICTURE menu cannot be displayed when DYNAMIC is selected for Video Status.
- When the Menu button on the TV side panel is pressed, the FRONT PANEL CONTROL menu between INITIAL SETUP 05 and PICTURE ADJUST 01 will appear.

Auto Tuner Setup

The auto tuner setup function is described on page 29 as the interactive plug-in menu. If you need to run the auto tuner setup again, follow the steps below.

Press the MENU button

▲▼ To AUTO TUNER SETUP

◀▶ To operate

▲▼ To TUNER MODE (IN ANALOG)

◀▶ To choose CABLE, AIR or SKIP

▲▼ To TUNER MODE (IN DIGITAL)

◀▶ To choose ATSC, DIGITAL CABLE or SKIP

Press the OK button to start

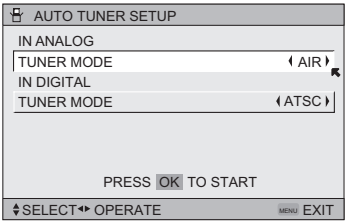

Programming will take approximately 2 to 4 minutes. The auto tuner is finished when the message **PROGRAMMING OVER!** appears onscreen.

Press the Menu button when finished

Note:

- Digital Auto Tuner Setup will take approximately 14 minutes.

Onscreen Menus

Channel Summary

Channel summary allows you to customize the line-up of channels received by your TV. Regarding analog channels, you can add or delete channels from the line-up or prevent any unauthorized viewers from watching any or all 191 channels. Regarding digital channels, the only channels that will appear are the ones that are broadcasting.

Press the MENU button

▲▼ To CHANNEL SUMMARY

◀▶ To operate

The Channel summary screen will now be displayed with the channels set to scan marked with an "√". Regarding analog channels, you can delete channels from the scan by removing the "√". If any channels were missed during auto tuner setup and you wish to add them, you may by placing an "√" next to the channel number.

- Digital channels can not be added to the channel summary if the auto tuner setup did not find them.

▲▼◀▶ To the SCAN column

Press the OK button to include or delete from scan

Press the MENU button when finished

Note:

- The number of a digital channel may change, depending on the time of some broadcastings. If this channel existed and now had disappeared, the lock channel or scanned channel by the channel summary for that channel will be cancelled.

Analog Channels

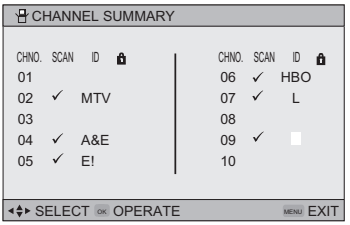

Digital Channels

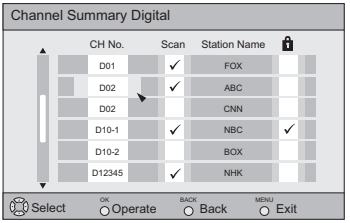

Note:

- When the Cable Card is not inserted into the Cable Card Slot:
  If you are watching analog channels, the above screen appears.
  If you are watching digital channels, the below screen appears.
- When the Cable Card is inserted into the Cable Card Slot:
  Below screen appears
  Both analog and digital channels are listed, but the background video is not displayed.

Onscreen Menus

How to set the channel label. ***(This is only for analog broadcasting.)***

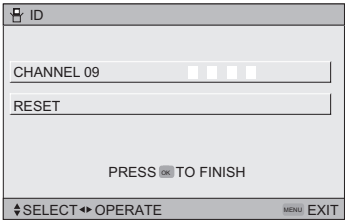

Press the MENU button

▲▼ To CHANNEL SUMMARY
◀▶ To operate
▲▼ To the ID column

Press the OK button to enter

◀▶ To select the character you want
▲▼ To move to the next space

...continue to follow these directions for all four spaces

Press the OK button to finish

Your characters are now set

Press the MENU button when finished

If you want to reset the characters you set:

Press the MENU button

▲▼ To CHANNEL SUMMARY
◀▶ To operate
▲▼ To the ID column

Press the OK button to enter

▲▼ To select RESET

Press the OK button to finish

Your characters are now reset

Notes:

- You can use characters for: Alphabet, numbers, marks and spaces.
- It is possible to set the maximum of 40 channel labels.
- If you try to set more than the 40 maximum, the message "MEMORY OVERFLOW" will appear.

You can block access to a channel by activating the channel lock.

Press the MENU button

▲▼ To CHANNEL SUMMARY

◀▶ To operate

▲▼◀▶ To the Lock Column ( )

Press the ZERO button to lock or unlock that channel

Press the MENU button when finished

Onscreen Menus

Channel Guard Message

When a viewer attempts to watch a guarded channel, the following message appears:

To watch a channel that you have locked, enter the Lock Code using the 10 key pad.
If the wrong code is entered, the message "INVALID LOCK CODE!" will flash on the screen.

The channel cannot be accessed until the correct code is entered.

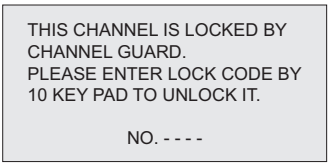

Notes:

- Once a channel has been unlocked, it will remain unlocked until the television is turned off.
- See also "Set Lock Code", page 46.

V-Chip

Your TV is equipped with V-Chip technology which enables you to block channels or content that you feel to be inappropriate for children, based on US and Canada rating guidelines. V-Chip has no effect on video signals from DVD discs or Camcorder connection.

Note: Some programs, and movies are broadcast without a ratings signal. Even if you set up V-CHIP ratings limits, these programs will not be blocked. See page 41 for information on how to block unrated programs.

Note (for Canadian viewers): The V-Chip function is based on specifications designed for the United States and therefore may not work properly in Canada.

You can customize the V-Chip settings of your television to match your personal tastes. The V-Chip menu below is the starting point for your V-Chip settings

You can use US V-Chip settings (for programming broadcast from the United States), Canadian V-Chip settings (for programming broadcast from Canada), and movie ratings. You may use any or all of the settings (US V-Chip, Canada V-Chip, Movie ratings). Descriptions for setting each of the three V-Chip formats appear in the next six pages along with descriptions of the rating categories.

To access the rating categories:

Press the MENU button

▲▼ To V-CHIP

◀▶ To operate (Lock icon will appear)

Press ZERO to access the V-Chip menu

◀▶ To turn V-Chip ON or OFF (V-Chip must be turned ON for rating settings to operate)

▲▼ To move to SET US TV RATINGS, SET MOVIE RATINGS, or SET CANADIAN RATINGS (see following pages for descriptions of each item)

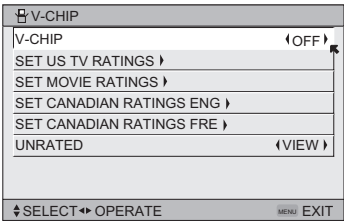

Unrated Programs

Unrated programming refers to any programming which does not contain a rating signal. Programming on television stations which do not broadcast rating signals will be placed in the "Unrated Programming" category.

Examples of Unrated programs:

- Emergency Bulletins
- News
- Public Service Announcements
- Sports
- Some Commercials
- Locally Originated Programming
- Political Programs
- Religious Programs
- Weather

Note:

- TV programs or movies that do not have rating signals will be blocked if the unrated category is set to BLOCK.

Directions to Block Unrated Programs

You can block programs that are not rated.

Press the MENU button

▲▼ To V-CHIP

◀▶ To operate (The lock icon appears)

Press ZERO to access V-Chip setup options

▲▼ To UNRATED

◀▶ To VIEW or BLOCK

Press MENU when done

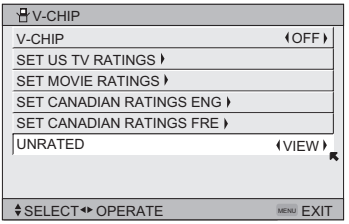

Onscreen Menus

US V-Chip Ratings

U.S. PARENTAL RATING SYSTEMS

Programs with the following ratings are appropriate for children.

- ❒ **TV Y is Appropriate for All Children**
  Programs are created for very young viewers and should be suitable for all ages, including children ages 2 - 6.
- ❒ **TV Y7 is for Older Children**
  Most parents would find such programs suitable for children 7 and above. These programs may contain some mild fantasy violence or comedic violence, which children should be able to discern from reality.

Programs with the following ratings are designed for the entire audience.

- ❒ **TV G stands for General Audience**
  Most parents would find these programs suitable for all age groups. They contain little or no violence, no strong language, and little or no sexual dialog or situations.
- ❒ **TV PG Parental Guidance Suggested**
  May contain some, but not much, strong language, limited violence, and some suggestive sexual dialog or situations. It is recommended that parents watch these programs first, or with their children.
- ❒ **TV 14 Parents Strongly Cautioned**
  Programs contain some material that may be unsuitable for children under the age of 14 including possible intense violence, sexual situations, strong coarse language, or intensely suggestive dialog. Parents are cautioned against unattended viewing by children under 14.
- ❒ **TV MA Mature Audiences Only**
  These programs are specifically for adults and may be unsuitable for anyone under 17 years of age. TV MA programs may have extensive V, S, L, or D.

Viewing Guidelines

In addition to the ratings categories explained above, information on specific kinds of content are also supplied with the V-Chip rating. These types of content may also be blocked. The content types are:

- **V/FV** is for VIOLENCE/FANTASY VIOLENCE
- **S** stands for SEXUAL CONTENT
- **L** stands for strong LANGUAGE
- **D** stands for suggestive DIALOG

Setting US V-Chip Ratings

Press the MENU button

▲▼ To V-CHIP
◀▶ To operate (lock icon appears)

Press ZERO to access the V-Chip menu

◀▶ To turn V-Chip ON or OFF
▲▼ To move to SET US TV RATINGS
◀▶ To operate

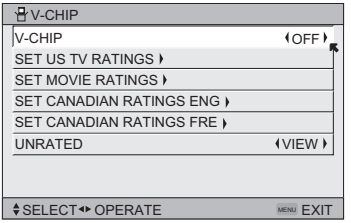

Directions to set US V-Chip Ratings

Line up the cursor in the column (TV PG, TV G, etc.) with the content row (V/FV, S, etc.) and press the ▲▼ or ◀▶ to move the cursor to the correct location. Press OK to turn the locking feature on or off. An item is locked if the icon appears instead of a "—".

For example. To block viewing of all TV 14 shows, move the cursor to the top row of that column and add a lock icon. Once you've put a lock on the top row, everything in that column is automatically locked.

▲▼◀▶ To the TV 14 Column

Press the OK button to lock

Press the MENU button when finished

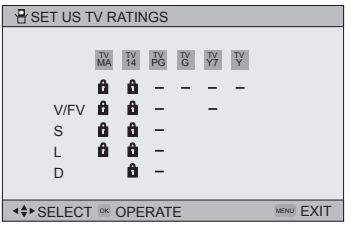

Note:

- If you want to change the setup, move the cursor to the top column and change the lock icon to "—" by pressing OK again. You may then select individual categories to block.

Onscreen Menus

Movies Ratings

❒ **NR – Not Rated**
This is a film which has no rating. In many cases these films were imported from countries which do not use the MPAA ratings system. Other NR films may be from amateur producers who didn't intend to have their film widely released.

NR (Not Rated) Programming may contain all types of programming including children's programming, foreign programs, or adult material.

❒ **G – General Audience**
In the opinion of the review board, these films contain nothing in the way of sexual content, violence, or language that would be unsuitable for audiences of any age.

❒ **PG – Parental Guidance**
Parental Guidance means the movie may contain some contents such as mild violence, some brief nudity, and strong language. The contents are not deemed intense.

❒ **PG-13 – Parents Strongly Cautioned**
Parents with children under 13 are cautioned that the content of movies with this rating may include more explicit sexual, language, and violence content than movies rated PG.

❒ **R – Restricted**
These films contain material that is explicit in nature and is not recommended for unsupervised children under the age of 17.

❒ **NC-17 – No One Under 17**
These movies contain content which most parents would feel is too adult for their children to view. Content can consist of strong language, nudity, violence, and suggestive or explicit subject matter.

❒ **X – No One under 18**
Inappropriate material for anyone under 18.

Directions to set Movie (MPAA) Ratings

Press the MENU button

▲▼ To V-CHIP
◀▶ To operate (Lock icon appears)

Press ZERO to access V-Chip setup options

▲▼ To SET MOVIE RATINGS
◀▶ To enter movies menu

For example: To block viewing of programming rated NC-17 shows, move the cursor to the NC-17 column and add a lock icon. Once you've put a lock on the NC-17 column, X column is automatically locked.

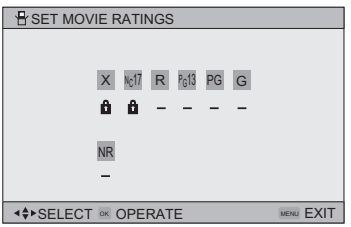

▲▼◀▶ To the NC-17 Column

Press the OK button to lock

Press the MENU button to finish

- If you want to change the setup, move the cursor to the column and change the lock icon to "—" by pressing OK again.

Canadian V-Chip Ratings

- **E – Exempt**
  Exempt programming includes: news, sports, documentaries and other information programming, talk shows, music videos, and variety programming.
- **C – Programming Intended for Children**
  Violence Guidelines: There will be no realistic scenes of violence. Depictions of aggressive behavior will be infrequent and limited to portrayals that are clearly imaginary, comedic or unrealistic in nature.
- **C8+ – Programming Intended for Children 8 and Over**
  Violence Guidelines: Any realistic depictions of violence will be infrequent, discreet, of low intensity and will show the consequences of the acts. There will be no offensive language, nudity or sexual content.
- **G – General Audience**
  Programming will contain little violence and will be sensitive to themes which could affect younger children.
- **PG – Parental Guidance**
  Programming intended for a general audience, but which may not be suitable for younger children. Parents may consider some content not appropriate for children aged 8-13.
- **14+ – 14 Years and Older**
  Parents are strongly cautioned to exercise discretion in permitting viewing by pre-teens and early teens. Programming may contain mature themes and scenes of intense violence.
- **18+ – Adult**
  Material intended for mature audiences only.

Directions to set Canadian V-Chip Ratings

Press the MENU button

▲▼ To V-CHIP
◀▶ To operate (lock icon appears)

Press ZERO to access V-Chip setup options

▲▼ To SET CANADIAN RATINGS ENG (for English)
◀▶ To enter ratings menu

For example: To block viewing of programming rated 14+ shows, move the cursor to the 14+ column and add a lock icon. Once you've put a lock on the 14+ column, 18+ column is automatically locked.

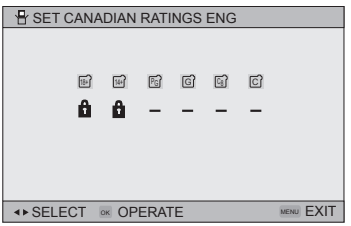

◀▶ To the 14+ Column

Press the OK button to lock

Press the MENU button to finish

Notes:

- If you want to change the setup, move the cursor to the column and change the lock icon to "—" by pressing OK again.
- For instructions on "SET CANADIAN RATINGS FRE (in French)", please see page 45 in the French side of this user's guide.

Onscreen Menus

Set Lock Code

Channel guard and V-Chip settings are protected by a four-digit lock code. Your TV comes preset with a lock code of “0000”. You may change the code to any four-digit number you wish. To change the lock code, follow the steps below.

Press the MENU button

▲▼ To SET LOCK CODE

◀▶ To operate (lock icon appears)

Press ZERO to access the lock code

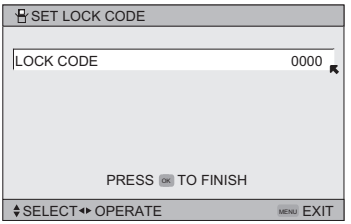

The first digit will be highlighted

◀▶ To select the number

▲▼ To move to the next digit

Continue to follow these directions for all four numbers

Press the OK button to finish (your lock code is now set)

Press the Menu button when finished

When a viewer attempts to watch a blocked channel, this message appears:

THIS PROGRAMMING EXCEEDS
YOUR RATING LIMITS.
PLEASE ENTER LOCK CODE BY
10 KEY PAD TO UNLOCK IT.
NO. - - - -

The channel will remain blocked until the correct lock code is entered (see above for information on setting your lock code).

Notes:

- After a power interruption you must reset the lock code.
- Write your lock code number down and keep it hidden from potential viewers.
- If you forget the lock code, a new code may be set using the steps listed above.

Onscreen Menus

Language

The language function is described on page 27 as the interactive plug-in menu. If you need to choose the language again, follow the steps below.

Press the Menu button

▲▼ To LANGUAGE

◀▶ To choose a language: ENG. (English), FRAN. (French) or ESP. (Spanish)

Press the MENU button when finished

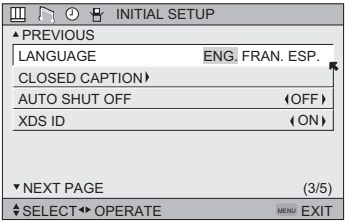

Closed Caption

Many broadcasts now include an onscreen display of dialog called closed captions. Some broadcasts may also include displays of additional information in text form. Your television can access and display this information using the closed caption feature. To activate the closed caption feature, follow the steps below. There are three methods. When you are watching analog channels, you can perform Analog Setting of closed caption. When you are watching digital channels, you can perform Digital Auto Setting or Digital Manual Setting.

Analog Setting

Press the MENU button

▲▼ To CLOSED CAPTION

◀▶ To enter

▲▼ To MODE

◀▶ To select CAPTION or TEXT in MODE

▲▼ To CAPTION or TEXT

◀▶ To select a caption (CC1 to CC4) or text channel (T1 to T4)

Press the OK button to save

Press the MENU button when finished

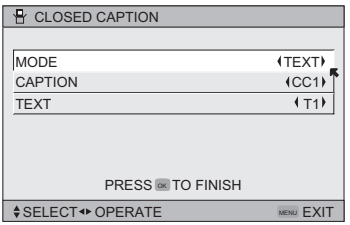

Onscreen Menus

Digital Auto Setting

Press the MENU button

▲▼ To CLOSED CAPTION
◀▶ To enter
▲▼ To Type
◀▶ To select Auto, Advanced or Basic

Auto: *Shows closed caption a priority for digital channels over analog channels. It is set automatically.*
Advanced: *Shows only the digital closed caption.*
Basic: *Shows only the analog closed caption.*

▲▼ To Service
◀▶ To select 1, 2, 3, 4, 5 or 6
▲▼ To Appearance
◀▶ To enter
◀▶ To select Auto
▲▼ To Set

Press the OK button to save

The font/type and color are set automatically.

Press the MENU button when finished

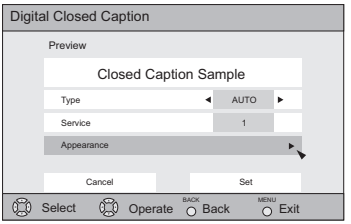

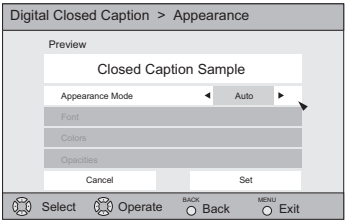

Note:
- If you want to cancel the settings, select cancel.

Digital Manual Setting

Press the MENU button

▲▼ To CLOSED CAPTION

◀▶ To enter

▲▼ To Type

◀▶ To select Auto, Advanced or Basic

▲▼ To Service

◀▶ To select 1, 2, 3, 4, 5 or 6

▲▼ To Appearance

◀▶ To enter

◀▶ To select Manual

▲▼ To Font

◀▶ To enter

▲▼ To select Font Size or Font Style

◀▶ To select the setting you like

Font Size: Auto, Standard, Large or Small

Font Style: Auto, Serif Mono, Serif, Sanserif mono, Sanserif, Casual, Cursive or Small Capital

▲▼ To Set

Press the OK button to save

▲▼ To Colors

◀▶ To enter

▲▼ To select Text, Edge or Background

◀▶ To select the setting you like

Auto, White, Black, Red, Green, Blue, Yellow, Magenta or Cyan

▲▼ To Set

Press the OK button to save

▲▼ To Opacities

◀▶ To enter

▲▼ To select Text/Edge or Background

◀▶ To select Auto, Transparent, Translucent, Solid or Flashing

▲▼ To Set

Press the OK button to save

Press the MENU button when finished

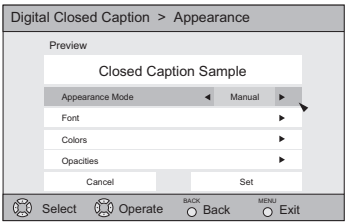

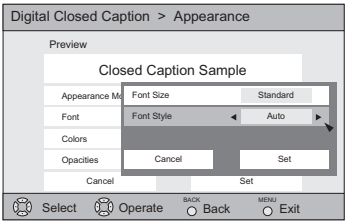

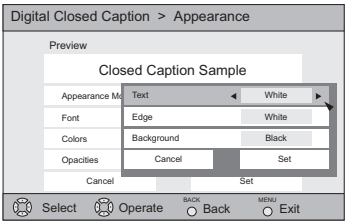

All fonts used for digital closed caption and digital menus are licensed from Monotype Imaging Inc.

Notes:

- Closed caption subtitles are usually found on closed caption channel CC1. Some programs may include additional text information which is usually found on text channel T1. The other channels are available for future use.
- Closed captioning may not work correctly if the signal being received is weak or if you are playing a video tape.
- Most broadcasts containing closed captioning will display a notice at the start of the program.
- To select the mode, press the C.C. button. See page 73.
- When ZOOM aspects like PANORAMA or CINEMA are selected, Digital Closed Captions may be cut off or distorted.

Onscreen Menus

Auto Shut Off

This function automatically shuts off your TV when there is no signal from the channel the TV is on.

Press the MENU button

▲▼ To AUTO SHUT OFF
◀▶ To turn ON or OFF

Press the MENU button when finished

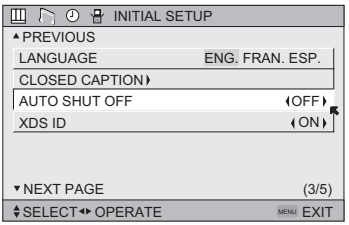

- If the channel that you have on does not receive a signal for more than one minute, the blinking text "NOT RECEIVING A SIGNAL AUTO SHUT OFF IN 9 MIN." appears on the screen, and starts the countdown. If no signal is being received within 10 minutes, the TV shuts itself off.
- When i.LINK is displayed, Auto Shut Off will not work.

XDS ID

XDS ID Display provides a channel's call letters, the network's name, and even a program name. The XDS ID information is provided by the broadcaster.

Press the MENU button

▲▼ To XDS ID
◀▶ To turn ON or OFF

Press the MENU button when finished

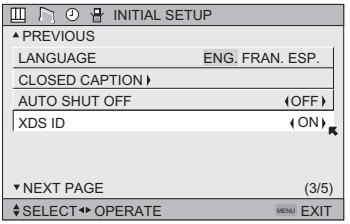

Noise Muting

This feature inserts a blank gray screen over channels which are not broadcasting or are too weak to be received clearly.

Press the MENU button

▲▼ To NOISE MUTING
◀▶ To turn noise muting ON or OFF

Press the MENU button when finished

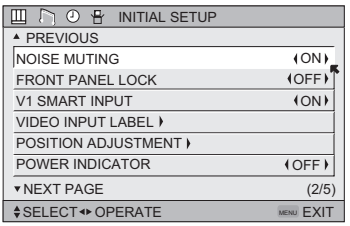

Notes:

- Noise muting will not work during auto tuner setup or when you operate channel summary.
- Noise muting will not work when the digital TV or i.LINK is displayed.

Front Panel Lock

This allows you to lock the keys on the side of the TV, so that a child may not accidentally change your viewing preferences.

Press the MENU button

▲▼ To FRONT PANEL LOCK
◀▶ To turn ON or OFF

Press the MENU button when finished

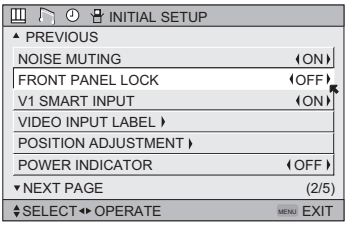

You can turn off this feature in the following ways:

- Unplug the power cord, and plug it back in. Do this if your batteries die, or you lose your remote control.
- Use the remote control.
- Press the MENU button on the side of the TV for more than 3 seconds. In this case, the OSD for FRONT PANEL LOCK will appear.

Note:

- To turn ON/OFF the TV, press the power button for more than 3 seconds. This feature will remain ON.

V1 Smart Input

This feature is used if you have connected an AV Receiver to your television. By turning this feature on, your television can automatically detect the signal source from your components that are connected to your AV Receiver.

Press the MENU button

▲▼ To V1 SMART INPUT
◀▶ To turn ON or OFF

Press the MENU button when finished

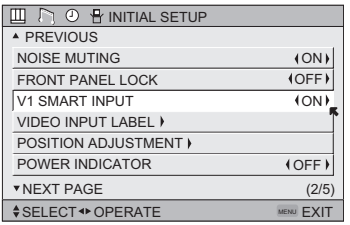

Notes:

- If you do not have an AV Receiver connected to your television, turn this feature OFF.
- Some AV Receivers may not work with this function.

Onscreen Menus

Video Input Label

This function is used to label video input connections for the onscreen displays.

- Press the MENU button
- ▲▼ To VIDEO INPUT LABEL
- ◀▶ To enter
- ▲▼ To select the desired video input
- ◀▶ To select the desired preset input label (see chart below)
- Press the OK button to save
- Press the MENU button when finished

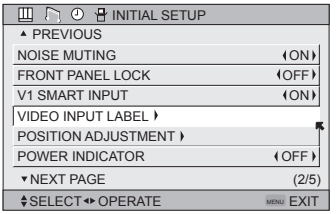

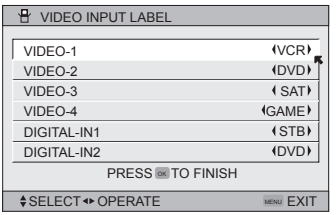

Preset Labels	Select when...
VCR	You have a VCR connected to the video input
DVD	You have a DVD connected to the video input
PVR	You have a Personal Video recorder connected to the video input
DVHS	You have a Digital VCR connected to the video input
STB	You have a Set-top Box connected to the video input
SAT	You have a Satellite Receiver connected to the video input
AMP	You have an Amplifier connected to the video input
GAME	You have a Video Game connected to the video input
CAM	You have a Video Camera connected to the video input
DISC	You have a Video Disc player connected to the video input

Position Adjustment

Position adjustment allows you to adjust the position of the picture on the screen vertically when the aspect is set to panorama or cinema.

Press the MENU button

▲▼ To POSITION ADJUSTMENT

◀▶ To enter

▲▼◀▶ To adjust the position

Press the MENU button to finish

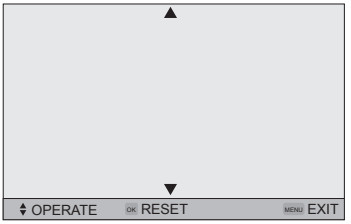

Notes:

- To reset the adjustment to the center, press the OK button.
- When the arrow disappears, while you are adjusting the position, the position is at its maximum limit.
- If you select REGULAR, SLIM and FULL size with aspect or Multi Screen, position adjustment option is not seen.
- When you change the screen size, perform the position adjustment again.
- Position adjustment allows you to adjust the screen position vertically and horizontally when the aspect is set Panorama Zoom or Cinema Zoom for 1080i and 720p signals, or when PC mode is set.
- It is also possible to use Position Adjustment when you are in PC Mode
- When you are receiving a 1080p signal, Position Adjustment can not be selected.

Power Indicator

Power indicator allows you to adjust the brightness of the power indicator

Press the MENU button

▲▼ To POWER INDICATOR

◀▶ To adjust POWER INDICATOR LOW, HIGH or OFF

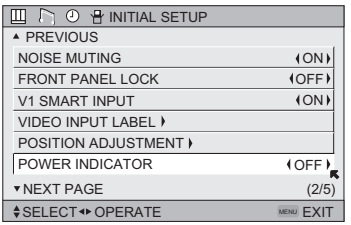

Notes :

- When OFF is selected :
  The LED disappears if you have a TV signal.
  The LED is lit as “LOW” when there is no TV signal.
- When the On Timer turns ON, the LED is lit as "LOW" when you turn the power off.
- If you set a timer on the TV, the power indicator will light even if the TV is on stand by.

Onscreen Menus

Video-1 Monitor Out

This function allows you to set whether the signal, which comes from VIDEO-1 input terminal, should be output from MONITOR OUT terminal. If you select it from MONITOR OUT, set it to "ON".

Press the MENU button

▲▼ To VIDEO-1 MONITOR OUT

◀▶ To select ON or OFF

Press the MENU button to finish

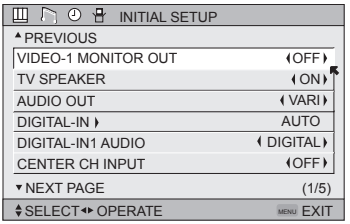

TV Speaker

If your TV is connected to a stereo system, you can turn off the TV speakers and listen to the audio through your stereo.

Press the MENU button

▲▼ To TV SPEAKER

◀▶ To turn the TV's speakers ON or OFF

Press the MENU button when finished

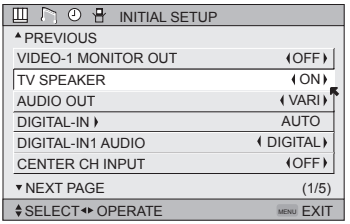

Notes:

- Before you turn the TV speaker setting from OFF to ON, **make sure that the TV volume level is low!** If the TV volume is set too high, the sound level will be extremely loud.
- After a power interruption, the TV speaker settings will return to "ON".

Audio Out

If your television is connected to an external speaker source, audio out gives you the option of controlling the volume level with your TV's remote control.

Press the MENU button

▲▼ To AUDIO OUT

◀▶ To VARI or FIX

Press the MENU button when finished

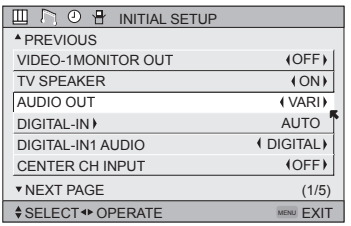

VARI: Lets you adjust the volume of the external speakers using the VOLUME+/– buttons on your TV's remote control.

FIX: The volume of the external speakers is adjusted using the audio device's remote control.

Digital-In

The DIGITAL-IN option can only be displayed in the INITIAL SETUP menu when an HDMI480p picture signal is being input to the DIGITAL-IN terminal. This option adjusts the position when an HDMI or DVI 480p picture signal is being displayed on the screen. There are two types of HDMI480p picture signals: 640x480 and 720x480. If the displayed picture is slightly shifted, the position can be adjusted by selecting either SIZE1 or SIZE2.

Press the MENU button

▲▼ To DIGITAL-IN

◀▶ To enter

▲▼ To select AUTO, SIZE1 or SIZE2

Press the MENU button to finish

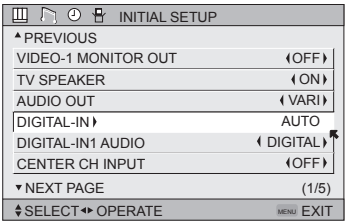

Notes:

- The DIGITAL-IN menu can only be displayed when a HDMI or DVI 480p picture signal is input to the Digital-In terminal and the picture is being displayed on the screen.
- You can select AUTO only when the signal is 480p for HDMI. When you select AUTO, the televison will select "SIZE1" or "SIZE2" automatically.

Digital-In1 Audio

This feature is used if you have a DTV or HDMI compatible component connected to your TV.

Press the MENU button

▲▼ To DIGITAL-IN1 AUDIO

◀▶ To select ANALOG, DIGITAL or AUTO

Press the Menu button when finished

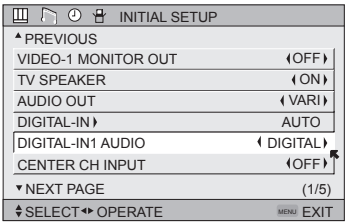

Notes:

- If your DTV or HDMI component is capable of digital audio and video, choose DIGITAL. If your DTV or HDMI component is capable of analog audio and digital video, choose ANALOG.
- Refer to your DTV or HDMI component's instruction manual for more information.
- When you select AUTO, the television will select "ANALOG" or "DIGITAL" automatically, depending on the audio input from the HDMI.
- When you select DIGITAL, select PCM on Digital Sound in the Digital Setup menu. See page 57.

Onscreen Menus

Center CH Input

HD-56FH97, HD-61FH97, HD-70FH97, HD-56FN97, HD-61FN97, HD-70FN97 ONLY

When you are using a surround system, you can substitute the speaker of this television for the center speaker of your surround system. Set CENTER CH INPUT to ON when you use the speaker as the center speaker of your surround system. The volume differs when the TV is being utilized as the Center Channel Input versus when it is not.

Press the MENU button

▲▼ To CENTER CH INPUT

◀▶ To adjust CENTER CH INPUT to ON or OFF

Press the MENU button when finished

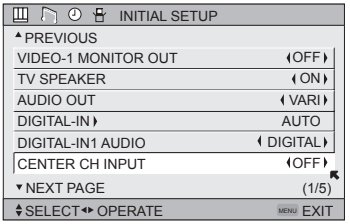

Note:

- In order to use the CENTER CHANNEL SPEAKER feature, you need a video signal present as well as sound. Because of that we recommend using this feature for Home Theater setup only. If there is no video signal present, the TV will be muted.
- There are two different volume adjustment levels, one for regular TV and one for TV used as a CENTER CHANNEL. Please remember that when switching CENTER CHANNEL mode ON and OFF in TV menu.

Digital Setup

Use this function when you are receiving a digital broadcast.

Press the MENU button

▲▼ To DIGITAL SETUP

◀▶ To enter

The onscreen will appear

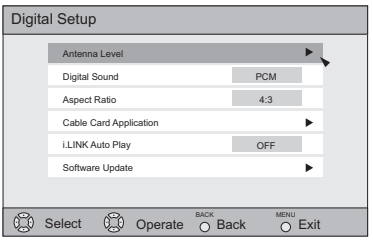

Notes:

- Software Update will only appear when the SD Card is inserted.
- If you are watching an analog channel, you can still access the digital setup menu at anytime, while you are doing this, the background screen will turn blank. In this case, the tuner will switch to digital, since you are accessing the digital setup menu.

Antenna Level

Confirms the present antenna level.

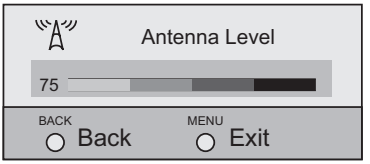

Press the MENU button

▲▼ To DIGITAL SETUP

◀▶ To enter

▲▼ To Antenna Level

◀▶ To enter

Note:

- If you are watching an analog channel or a signal from your i.LINK device, antenna level will not appear.

Digital Sound

You can select the optical digital sound output, either PCM or Dolby Digital when your TV is connected to an amplifier that has Dolby Digital decoder. If you select Dolby Digital, you can enjoy listening in 5.1ch sound when watching digital broadcasts.

Press the MENU button

▲▼ To DIGITAL SETUP

◀▶ To enter

▲▼ To Digital Sound

◀▶ To select PCM or DOLBY DIGITAL

Press the MENU button when finished

Notes:

- If your amplifier does not have Dolby Digital decoder, select PCM. If you don't select PCM, it cannot output the sound from the speakers.
- For connecting an amplifier using the optical output, see page 20.

DOLBY DIGITAL

Manufactured under license from Dolby Laboratories. "Dolby", and the double-D symbol are trademarks of Dolby Laboratories.

Aspect Ratio

You can select the aspect mode for ATSC from 4:3 or 16:9.

Press the MENU button

▲▼ To DIGITAL SETUP

◀▶ To enter

▲▼ To Aspect Ratio

◀▶ To select 4:3 or 16:9

Press the MENU button when finished

Notes:

- Set the mode to 4:3 or 16:9 before you record a program using the ATSC MONITOR OUT.
- Make sure the mode you choose is the same as the TV's aspect ratio when the recorded program is played back, so that you can obtain a good picture quality, free from any unatural distortions.

Onscreen Menus

Cable Card Application

Press the MENU button

▲▼ To DIGITAL SETUP
◀▶ To enter
▲▼ To Cable Card Application
◀▶ To enter

Press the OK button

The application will perform

i.LINK Auto Play

When playing a D-VHS tape, you can set it to the i.LINK input automatically, or manually.

Press the MENU button

▲▼ To DIGITAL SETUP
◀▶ To enter
▲▼ To i.LINK Auto Play
◀▶ To select ON or OFF

ON: Set to i.LINK input automatically
OFF: Select the input manually

Press the MENU button when finished

Software Update

At first, insert the SD(Multi-media) card into the memory card slot. This function will appear only when you insert an SD Card.

Press the MENU button

▲▼ To DIGITAL SETUP
◀▶ To enter
▲▼ To Software Update
◀▶ To enter
▲▼ Checks the card if it needs an update or not

Press the MENU button when finished

Onscreen Menus

Picture Settings

These settings allow you to change and adjust the way the picture appears on your television.

TINT
Tint allows you to adjust the levels of red and green in your TV picture.

COLOR
The color function lets you make all the colors in the TV picture appear either more vivid or subtle.

PICTURE
Picture allows you to adjust the levels of black and white on the TV screen, giving you a darker or brighter picture overall.

BRIGHT
You can adjust the overall brightness of the TV picture with the Bright control.

DETAIL
The Detail feature adjusts the level of fine detail displayed in the picture.

IRIS
The IRIS adjusts the level of brightness on the TV screen.

Adjust the Picture Settings

Press the MENU button

▲▼ To TINT, COLOR, PICTURE, BRIGHT, DETAIL or IRIS

◀ ▶ To enter

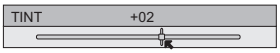

◀ ▶ To adjust the setting

▲▼ To move to the next setting

Press the MENU button when finished

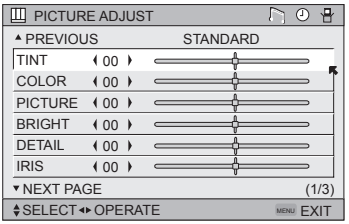

Note:

- There are four video status settings: Dynamic, Standard, Theater and Game. Each video status setting has a separate memory for HD (1080i/1080p/720p) and SD (480p/480i) video signal. Each video status can be chosen along with your favorite picture settings (Tint, Color, Picture, Bright, Detail, etc.) See page 71 for details.

Color Temperature

You can decide how strong or dull the colors appear on the TV screen.

Press the MENU button

▲▼ To COLOR TEMPERATURE

◀ ▶ To enter

▲▼ To set LOW or HIGH

Press the MENU button when finished

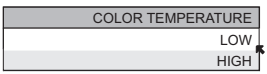

Onscreen Menus

Color Management

This TV supports the COLOR MANAGEMENT function to ensure dull colors are compensated to produce natural hues.

Press the MENU button

▲▼ To COLOR MANAGEMENT

◀▶ To enter

▲▼ To select the mode “ON" or "OFF"

Press the MENU button when finished

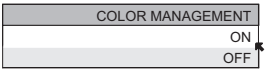

Dynamic Gamma

JVC's Dynamic Gamma Circuitry (DGC) makes it easier to see dark areas when a picture has many dark areas, and makes it easier to see the bright areas when a picture has many bright areas. DGC is turned on, DGC analyzes and adjusts the total level of picture brightness balance, especially in dark areas where the level of grayscale is often lost, turning completely to black DGC automatically enhances the detail in these dark areas providing a more dynamic image with finer detail, so the optimum picture settings are automatically set for each picture. Normally use with DGC on.

Press the MENU button

▲▼ To DYNAMIC GAMMA

◀▶ To enter

▲▼ To turn ON or OFF

Press the MENU button when finished

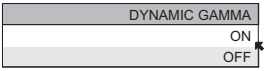

Advanced Smart Picture

Advanced Smart Picture detects the APL (Average Picture Level) and adjusts the level of brightness on the TV screen suitable for what you are watching.

Press the MENU button

▲▼ To ADVANCED SMART PICTURE

◀▶ To enter

▲▼ To select the mode "ON" or "OFF"

Press the MENU button when finished

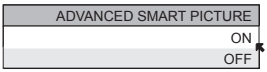

Note:

- When you have "DYNAMIC" selected in the "VIDEO STATUS", Advanced Smart Picture is not selected.

Digital VNR

This function can be selected to change the effect of Digital VNR (Video Noise Reduction).

Press the MENU button

▲▼ To DIGITAL VNR

◀▶ To enter

▲▼ To select the effect you like.

AUTO: adjusts the effect of VNR automatically.
MIN: adjusts the effect of VNR to minimum.
MAX: adjusts the effect of VNR to Maximum.
OFF: turns the effect of VNR off.

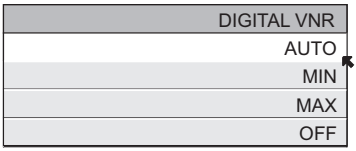

Press the MENU button when finished

Notes:
- If it is in PC, Digital VNR will not be displayed.
- When you are receiving a 1080p signal, Digital VNR can not be selected.

MPEG NR

This function effects the block noise removal and mosquito NR (Noise Reduction) simultaneously.

Press the MENU button

▲▼ To MPEG NR

◀▶ To enter

▲▼ To select ON or OFF

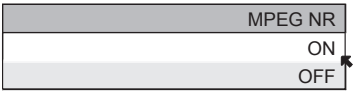

Press the MENU button when finished

Notes:
- When you are receiving digital channels, block noise removal will have no effect.
- When you are receiving a 1080p signal, MPEG NR can not be selected.

Reset

Reset resets all picture adjustments (tint, color, picture, bright, detail, iris, color temperature, Color Management, Dynamic Gamma, Advanced Smart Picture, Digital VNR and MPEG NR) at once to the default settings.

Press the MENU button

▲▼ To RESET

◀▶ To enter

The onscreen menu disappears for a moment, and then the settings are reset to the default setting for all the picture adjustments.

Press the MENU button when finished

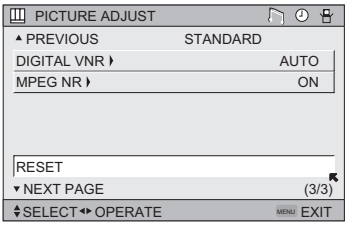

Onscreen Menus

Sound Settings

These settings allow you to change and adjust the sound on your television.

BASS – You can increase or decrease the level of low-frequency sound in the TV's audio with the bass adjustment.

TREBLE – Use treble to adjust the level of high-frequency sound in your TV's audio.

BALANCE – Adjust the level of sound between the TV's left and right speakers with the balance setting.

Adjust the Sound Settings

Press the MENU button

▲▼ To BASS, TREBLE or BALANCE

◀ ▶ To adjust the setting

▲▼ To move to the next setting

Press the MENU button when finished

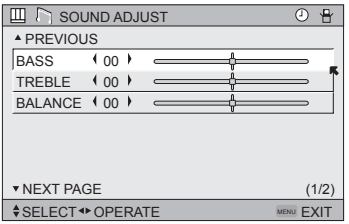

Note:

- You can reset the sound adjustments (BASS, TREBLE and BALANCE) you set at once as the default setting when you select reset.
- You can adjust BALANCE only when A.H.S.+ is off. See page 70.
- if CENTER CHANNEL INPUT is ON, SOUND ADJUST MENU 1/2 is skipped. **(HD-56FH97, HD-61FH97, HD-70FH97, HD-56FN97, HD-61FN97, HD-70FN97 ONLY).**

Turn On Volume

Turn On Volume allows you to set the volume level when you turn the TV on.

Press the MENU button

▲▼ To TURN ON VOLUME

◀▶ To set

Current ⟷ 00 ⟷ 01 ⟷ 02 ⟷ 03 ⟷ 48 ⟷ 49 ⟷ 50

Press the MENU button to finish

Volume Limit

Volume Limit allows you to set the maximum volume level.

Press the MENU button

▲▼ To VOLUME LIMIT

◀▶ To set the maximum volume level

00 ⟷ 01 ⟷ 02 ⟷ 03 ⟷ 48 ⟷ 49 ⟷ 50

Press the MENU button to finish

Reset

Reset resets all Sound Adjustments (Bass, Treble, Balance, Turn On Volume and Volume Limit) at once to the default settings. See page 61 on how to use reset.

Set Clock

The set clock function is described on page 28 as the interactive plug-in menu. You can choose to set the clock automatically or manually. If you need to set the clock again, follow the steps below.

Press the MENU button

▲▼ To SET CLOCK

◀▶ To enter

When you set the clock automatically, choose AUTO by pressing the ◀ or ▶ arrows.

▲▼ To TIME ZONE

◀▶ To select your time zone

ATLANTIC ⟷ EASTERN ⟷ CENTRAL ⟷ MOUNTAIN ⟷ PACIFIC ⟷ ALASKA ⟷ HAWAII

▲▼ To D.S.T. (daylight savings time)

◀▶ To turn D.S.T. ON or OFF

Press OK to finish

Press the MENU button when finished

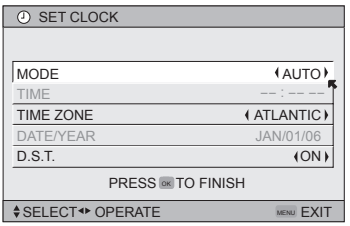

When you set the clock manually, choose MANUAL by pressing the ◀ or ▶ arrows.

▲▼ To move to the hours

◀▶ To set the hours

▲▼ To move to minutes

◀▶ To set the minutes

▲▼ To TIME ZONE

◀▶ To select your time zone:

(Atlantic, Eastern, Central, Mountain, Pacific, Alaska or Hawaii)

▲▼ To DATE/YEAR

◀▶ To set the month

▲▼ To day

◀▶ To set the day

▲▼ To year

◀▶ To set the year

▲▼ To D.S.T. (daylight savings time)

◀▶ To turn D.S.T. ON or OFF

Press OK to start clock

THANK YOU !!

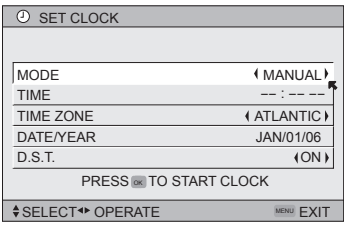

Press the MENU button when finished

Notes:

- D.S.T. can be used when it is set to ON in the SET CLOCK menu.
- Only when the MODE set to AUTO, the Daylight Savings Time feature automatically adjusts your TV's clock for Daylight Savings. The clock will move forward one hour at 2:00 am on the first Sunday in April. The clock will move back one hour at 2:00 am on the last Sunday in October.
- You will have to reset the clock after a power interruption. You must set the clock before operating any timer functions.

Onscreen Menus

On/Off Timer

The on/off timer lets you program your television to turn itself on or off. You can use it as an alarm to wake up, to help you remember important programs, or as a decoy when you're not home.

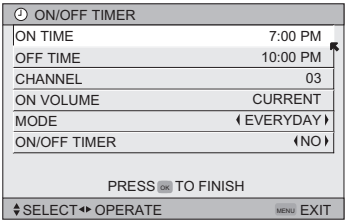

- Press the MENU button
- ▲▼ To ON/OFF TIMER
- ◀▶ To enter (begins with ON TIME)
- ◀▶ To set the hour (AM/PM) you want the TV to turn on
- ▼ To move to minutes
- ◀▶ To set the minutes
- ▼ To accept ON TIME and move to OFF TIME (the time the TV will turn off). Set the OFF TIME the same way as ON TIME
- ▼ To accept OFF TIME and move to CHANNEL
- ◀▶ To select channel
- ▼ To ON VOLUME
- ◀▶ To set the volume level
- ▼ To move to MODE
- ◀▶ Choose ONCE or EVERYDAY
- ▼ To ON/OFF TIMER
- ◀▶ Choose YES to accept the timer setting, choose NO if you don't wish to accept
- Press the OK button to finish
- Press the MENU button to exit the menu

Notes:

- The on/off time cannot be set to locked or guarded channels.
- In order for the on/off timer to work, the clock must be set.
- After a power interruption, the timer settings must be reset.

Lamp Timer Reset

The lamp replacement message will appear when you need to change the lamp. After you replace the lamp, you need to reset the timer which is built into your television.

Press the MENU button

▲▼ To LAMP TIMER RESET

◀▶ To Enter

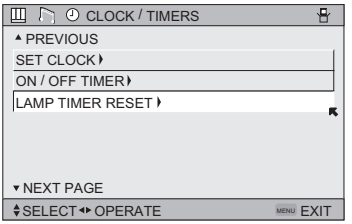

The following message will appear.

PRESS OK TO RESET THE LAMP TIMER.

Press the OK button while the above message appears on the television screen.

THE LAMP TIMER IS RESET SUCCESSFULLY.

The lamp timer has now been reset.

Notes:

- You can use the Lamp Timer Reset only after replacing the lamp.
- See Page 85 for instructions on lamp replacement.

Button Functions

Multi Screen Function

Your television has two kinds of screen: TWIN (2 channels) and INDEX (12 channels).

Note: After you press any multiscreen buttons, if you press the menu button, only the picture adjust screen will appear.

Twin

Activate the split-screen option by pressing TWIN on the remote control. The channel (or input) you were watching before pressing TWIN will appear on the left, the new channel will appear on the right. The sound will continue to come from the main screen channel (or input). To turn split-screen off and return to normal television viewing, press TWIN again or press the BACK button.

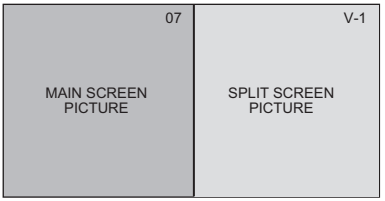

Notes:

- If the signal that you are watching is coming from the HDMI input, you cannot enter the SWAP or INDEX mode.
- Main Screen and Split Screen will not display the same channel or input at the same time.
- You can enter the TWIN mode when the screen is in NORMAL or INDEX mode.
- Split screen will not display digital channels.
- Split-screen functions will not work with locked channels or channels blocked by V-Chip ratings limits. A gray screen will display instead.
- With split screen, the picture from the component terminal and DIGITAL-IN terminal will not be displayed.
- The aspect of MAIN CHANNEL PICTURE becomes 16:9 when you input the picture of 480p, 720p and 1080i from the component terminal and DIGITAL-IN terminal.
- After you press the SELECT button, and select SPLIT SCREEN when you press the OK button, select normal screen. If you don't operate, the MAIN CHANNEL SCREEN will be automatically selected about 8 seconds later.
- Aspect does not work in Twin mode.
- When the cable card is inserted into the TV, the combination of analog broadcasting and digital broadcasting will not appear in the TWIN mode.
- When it is PC output, Main and Split screen will not be displayed.
- When you are in PC mode, TWIN, INDEX or FREEZE can not be used.
- When you press the Menu button in Twin mode, it appears only as Picture Adjust menu.
- When you are in 1080p mode, TWIN, INDEX or FREEZE can not be used.

Button Functions

Index

This allows you to quickly look at up to 12 channels at a time so that you can decide which one to watch.

1	2	3	4
5	6	7	8
9	10	11	12

Notes:

- Only Analog channel input signal will be displayed.
- You can watch the channel added in channel summary. See page 38.

Freeze

Pressing the FREEZE button causes the screen to change to the split-screen display with the still picture displayed on the right. In order to return to the normal display, press the FREEZE button once again.

Swap

You can exchange the channel (or input) displayed in the split screen window for the main screen image by pressing the SWAP button.

Note:

- It will only work in TWIN mode.

Select

With SELECT, you can select the picture (channel) while viewing TWIN screen. When you press SELECT button, the channel number on the top will be highlighted. Each press of SELECT will shift the channel.

Button Functions

Power

Turns the TV on or off.

Press the POWER button

Note:

- After turning the power on, you can not turn the power off for about one minute.

Number Buttons - 10Key Pad

Use the number buttons on the remote control to move directly to a specific channel. For example, to move to channel 12:

0 (Zero)

1 (One)

2 (Two)

Tune

Lets you decide the input channel and select it. After you press the number buttons on the remote, press the TUNE button. For example, to move to channel 12:

1 (One)

2 (Two)

Press the TUNE button

Input

Selects the signal input source for the television: VIDEO-1, 2, 3, 4, DIGITAL-IN1, DIGITAL-IN2 or i.LINK for video devices like VCRs, DVD players or camcorders.

Press the INPUT button

By every press of the INPUT button, you can change the input mode.

Notes:

- When you return to TV mode, press the RETURN +/TV button or direct 10 key pad or CHANNEL +/– button.
- You can also access by pressing the INPUT button on the side of the TV instead of the remote control.
- i.LINK can be selected only when you have an i.LINK device connected.
- If you have a PC connected to the TV, select VIDEO-3 (HD-56FH97, HD-61FH97, HD-70FH97, HD-56FN97, HD-61FN97 and HD-70FN97 ONLY).

Button Functions

Channel +/–

Use these buttons to move up or down all the available channels your TV is able to receive.

Volume +/–

Use these buttons to raise or lower the TV's volume level. The maximum is the level you set in Volume Limit. See page 62.

TheaterPro D6500K

The TheaterPro D6500K color temperature technology function makes sure that the video you watch is set to the standard color temperature, so that what you see is as true to what the film to video editors intended it to be.

Press the THEATERPRO button

Return +/TV

The RETURN+/TV button has three functions:

Return - Returns to the channel viewed just before the channel currently onscreen.

Return+ - Lets you program a specific channel to return to while scanning through the channels using the CH+ and CH– buttons.

TV - Returns to the TV mode.

Press the RETURN+/TV and hold for three seconds

The channel currently active has been programmed as your return+ channel. Now scan through the channels using the CHANNEL+/– buttons.

Press the RETURN+/TV

You will return to your programmed channel.

- To cancel your return+ channel, press and hold the RETURN+ button for three seconds. The message "RETURN CHANNEL CANCELLED!" will appear.
- Return+ works only with the Channel+/– buttons. Pressing any number key will cancel return+.

Button Functions

Sound

By pressing the SOUND button, you can change the A.H.S.+ (Advanced Hyper Surround plus) mode, VOICE ENHANCEMENT or A.T.C. (Advanced Tone Correction), SMART SOUND or MaxxBass on or off.

A.H.S.+ - Adds a more spacious surround sound. Music gives basic effect and movie for more effect.

VOICE ENHANCEMENT - Gives a clearer sound quality of the voices in what you are watching. **(HD-56FH97, HD-61FH97, HD-70FH97, HD-56FN97, HD-61FN97 and HD-70FN97 ONLY).**

A.T.C. - Reproduces distinctive sounds with tone correction. **(HD-56FC97 and HD-61FC97 ONLY).**

SMART SOUND - Decreases high sound levels, giving a regulated sound level.

MaxxBass - Emphasizes the bass sound

Press the SOUND button

▲▼ To select A.H.S.+, VOICE ENHANCEMENT or A.T.C., SMART SOUND or MaxxBass

◀▶ To choose the setting

Press the MENU when finished

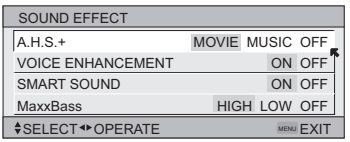

OR

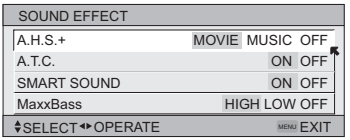

MaxxBass is a registered trademark of Waves Audio Ltd. in the USA, Japan and other countries.

Notes:
- Smart Sound may become an unnatural effect, depending on the signal source.
- You can adjust BALANCE only when A.H.S.+ is off.
- When Center CH Input is ON, all sound effects are turned OFF.

Muting

The MUTING button instantly turns the volume down completely when you press it. Press MUTING and the volume level will instantly go to zero. To restore the volume to its previous level, press MUTING again.

Button Functions

Video Status

The VIDEO STATUS button gives you a choice of four TV picture display settings, including a display of your own preferences.

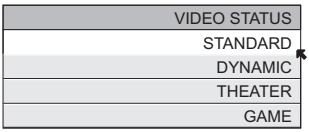

Standard - Resets the picture display to the factory settings.
Dynamic - Gives a vivid picture with better contrast when viewing in a brightly lit room.
Theater - Gives a rich, film-like look to video when viewing in a dimly lit room.
Game - Used for when you are playing video games connected to your TV.

Press the VIDEO STATUS button
By every press of the VIDEO STATUS button, you change the mode.

Note:

- You can also change the mode by pressing the ▲▼ buttons.
- Each mode is memorized for each input connected to the TV.
- You can also access the FRONT CONTROL PANEL screen by using the MENU button on the side of the TV instead of the remote control. It appears between INITIAL SETUP and PICTURE ADJUST screen, and it has VIDEO STATUS and ASPECT menus. Choose VIDEO STATUS by pressing MENU ▼ on the side panel and choose a mode by using the CHANNEL +/- buttons (◀ OPERATE ▶).
- There are four video status settings: Dynamic, Standard, Theater and Game. Each video status setting has a separate memory for HD (1080i/1080p/720p) and SD (480p/480i) video signal. Each video status can be chosen along with your favorite picture settings (Tint, Color, Picture, Bright, Detail, etc.)
  - – When an HD signal is displayed: Your HD settings are recalled for the video status you are using.
  - – When an SD signal is displayed: Your SD settings are recalled for the video status you are using.
  - – The input you are using (Input-1, Input-2, etc.) does not affect the setting that is recalled, just the signal type.
  - – This function considers PC input as an HD signal and PIP and TWIN screens as an SD signal.

Natural Cinema

Natural cinema corrects the problem of blurred edges which may occur when viewing a program originally shot on film (such as motion pictures) or animation. If you notice blurring at the edges of these programs, press NATURAL CINEMA and set it to AUTO. Natural Cinema helps correct conversion errors that occur when film, which is shot at 24 frames-per-second, is broadcast at the television rate of 30 frames-per-second.

Press the NATURAL CINEMA button

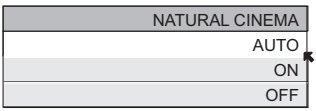

Notes:

- When you are receiving a 1080p signal, Natural Cinema can not be selected.
- The natural cinema mode is automatically set to “AUTO” in the following cases:
  - Turning on or off
  - Changing the channel or input mode
  - Using multi-screen functions
  - If you are in PC mode, Natural Cinema can not be used

Button Functions

Sleep Timer

The Sleep Timer can turn the TV off for you after you fall asleep. Program it to work in intervals of 15 minutes, for a total time of up to 180 minutes.

Press the SLEEP button

0 15 30 45 60 90 120 180

Sleep Timer Message

60 seconds before the automatic shutoff, this message will appear:

GOOD NIGHT!!
PUSH SLEEP TIMER BUTTON
TO EXTEND

You then have 60 seconds to press the SLEEP button to delay the shut off for another 15 minutes.

ML/MTS

MTS technology allows several audio signals to be broadcast in analog at once, giving you a choice in what you wish to hear with a TV program. In addition to mono or stereo sound, an MTS broadcast may also include a second audio program (SAP).

Press the ML/MTS button

By every press of the ML/MTS button, you change the mode

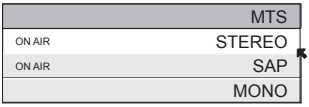

Notes:

- When you are receiving a digital broadcast, if there are other languages, you can change the language by pressing the ML/MTS button.
- Keep the TV in stereo mode to get the best sound quality. The sound will work in stereo mode even if a certain broadcast is in mono sound only.
- Choose the mono setting to reduce excessive noise on a certain channel or broadcast.
- Selecting SAP will allow you to hear an alternative soundtrack, if one is available.
- MTS unavailable if your television's Input source is in VIDEO-1, 2, 3, 4, DIGITAL-IN1, DIGITAL-IN2 or i.LINK mode, as described on page 68.
- ML/MTS will not work when you are using the Digital-In.
- You can also change the mode by pressing the ▲▼ buttons.

Button Functions

Display

The display screen shows the current status of timers, inputs and XDS ID.

Press the DISPLAY button

The screen to the right shows the following information:

- The current channel or AV input (Channel 05)
- The current time (12:20 pm)
- Sleep timer status/minutes remaining (The Sleep Timer is off)
- On/off timer status (Set to turn on everyday at 7:00 PM, off at 10:00 PM)
- Each Press of the DISPLAY button changes the display mode:

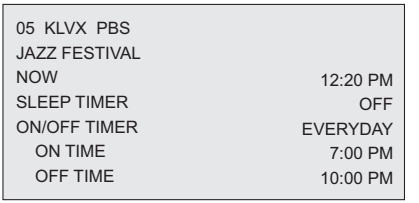

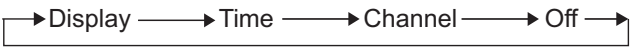

Display - Full screen shown above

Time - Shows the current time only

Channel - Shows the current channel

Off - Turns display off

Notes:

- You may also turn off the display at any step by pressing MENU.
- If the clock, sleep timer or on/off timer are not set, the display screen will show: "CLOCK NOT SET", "SLEEP TIMER OFF", and "ON/OFF TIMER OFF" respectively.

C.C. (Closed Caption)

Use the C.C. (Closed Caption) button to select the mode of closed caption.

Press the C.C. button

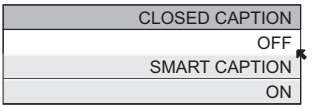

Notes:

- SMART CAPTION will appear when you press the MUTING button, only on channels where the broadcast contains closed captioning.
- When you select ON, it will be the mode selected in the Closed Caption Menu.
- See page 47 when you set the caption/text mode.
- You can also change the mode by pressing the ▲▼ buttons.
- If you are in PC mode, C.C. can not be used

Button Functions

Favorite

The Favorite button allows you to select your favorite channels easily. First, you must register the channels that you like. See how to register below.

Press the FAVORITE button
The favorite channel list will appear.

▲▼ To select the channel you want to watch

Press the OK button
It will change to the channel you have selected.

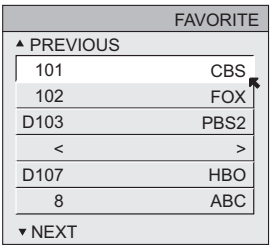

Register the favorite channel

Press the channel number you want to register
The channel program will change.

Press the FAVORITE button for three seconds
The channel will be registered in the favorite channel list.

Notes:

- Both analog and digital channels can be registered. The digital channels have a "D" in front of the channel number.
- The maximum number of channels you can register is 24.
- If you have registered the maximum number of channels, and try to register more channels, the oldest channel you registered will be deleted.
- Sub channels can not be registered.
- The newest channel you registered will appear at the top of the list.

Delete the favorite channel

Press the FAVORITE button
The favorite channel list will appear.

▲▼ To select the channel you want to delete
◀▶ To enter
Press the OK button
The channel was deleted.

Press the FAVORITE button when finished

Note:

- Before pressing the FAVORITE button when you are finished, press the ◀▶ button again, and you can return to the deleted channel.

Button Functions

Aspect

This feature will help you adjust the picture you are watching to give you the best possible picture quality.

Aspect Ratios

PANORAMA - With this ratio a normal 4:3 aspect picture is stretched to fit the dimensions of the 16:9 aspect screen.

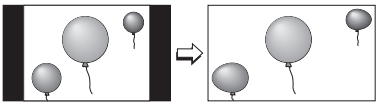

CINEMA - This ratio "zooms in" on the center part of a 4:3 aspect picture, blowing it up to fill the 16:9 screen.

FULL - This is the ratio to use when watching 16:9 High-Definition broadcasts.

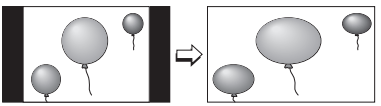

PANORAMA ZOOM - This ratio stretches the High-Definition 16:9 aspect image to eliminate the black side bars.

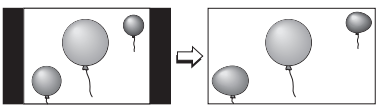

CINEMA ZOOM - This ratio stretches the High-Definition 16:9 aspect image to eliminate the black surrounding bars.

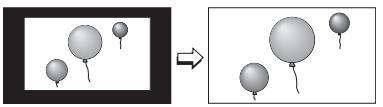

REGULAR - The regular ratio is used when you want to watch a 4:3 broadcast or recorded program without modifying the original picture to fit the dimensions of your 16:9 screen. The 4:3 picture will fill the screen from top to bottom, while black bars will appear to fill up the remaining space along the picture's sides. The 4:3 picture will be centered within the boundaries of the 16:9 screen.

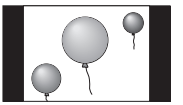

SLIM - This aspect mode shrinks the screen of 16:9 to 4:3. There are some programming that is already stretched by mistake at broadcasting companies, so this mode corrects it. Black side bars will appear.

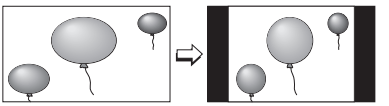

Aspect Ratios in PC Mode

REGULAR - This is the original aspect mode.

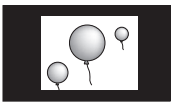

FULL - This aspect mode stretches the image to fit the dimensions of the 16:9 aspect screen.

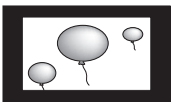

Button Functions

Aspect Ratios (Continued)

Press the ASPECT button

- *By pressing the ASPECT button, you can change the size.*

When you change the aspect ratios, it is different from their broadcast or recorded program.

SD (480i, 480p)
NTSC, 480i, 480p

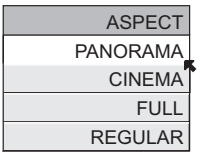

HD (1080i, 720p)
ATSC (1080i, 720p)

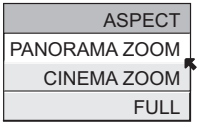

ATSC (480i, 480p)

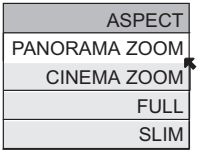

PC

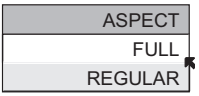

Notes:

- You can also choose the size by pressing the ▲▼ buttons.
- When you change the aspect ratio or signal, reset the picture position to center.
- You can also access the FRONT PANEL CONTROL screen by using the MENU button on the side of the TV instead of the remote control. It appears between INITIAL SETUP and PICTURE ADJUST screen, and it has VIDEO STATUS and ASPECT menus. Choose ASPECT by pressing Menu ▼ on the side panel and choose a mode by using the CHANNEL +/- buttons (◀ OPERATE ▶).
- "SLIM" can only be dispalyed when the signal is ATSC (480i or 480p).
- If the televison receives a 16:9 signal from your HDMI device, the aspect mode will turn to FULL automatically. If the television receives a 4:3 signal from your HDMI device when you are in FULL aspect mode, it will return to REGULAR aspect mode. If you change the aspect mode after the televison changed it to FULL automatically, the televison will change to the aspect mode you choosed.
- When you are receiving a 1080p signal, you can not change the aspect ratios.

Menu

The MENU button allows you to access JVC's onscreen menu system. Press MENU to activate the onscreen menu system.

- See individual topics like "Sound Adjust" for specific information on using menus.

OK

This button confirms your selection when you are in one of the onscreen menus.

Back

This button allows you to go back in the menu to change a selection or correct a mistake.

Button Functions

TV/CATV Slide Switch

Use either the television's own tuner or a cable box to select channels. Set this switch to **TV** to operate the television's built-in tuner. Move the switch to **CATV** to operate a cable box.

Note:

- See page 30 for information on programming your remote for cable box operation.

VCR/DVD Slide Switch

You can control a VCR or DVD player with the buttons on the lower part of the remote control. Move the slide switch to **VCR** or **DVD** to operate.

Notes:

- The remote is preset with the code 000 to control JVC-brand VCR's. For any other manufacturer's brand VCR, please see the code chart and instructions on page 31.
- The remote is preset with the code 000 to control JVC-brand DVD players. For any other manufacturer's brand DVD player, please see the code chart and instructions on page 32.

VCR Buttons

You can use this remote control to operate the basic functions of your VCR. These functions include: play, record, rewind, fast-forward, stop, pause, channel scan, TV/VCR, power on and power off.

Move the selector switch to **VCR** to operate.

- The remote is preset with the code 000 to control JVC-brand VCR's. For any other manufacturer's brand VCR, please see the code chart and instructions on page 31.

DVD Buttons

You can also use this remote control to operate the basic functions of your DVD player. These functions include: play, rewind, fast-forward, stop, still/pause, previous/next, tray open/close, power on and power off.

Move the selector switch to **DVD** to operate.

- The remote is preset with the code 000 to control JVC-brand DVD players. For any other manufacturer's brand DVD player, please see the code chart and instructions on page 32.

Light

All remote control buttons are illuminated, except for the TV/CATV slide switch, VCR/DVD slide switch and Light button. Press the LIGHT button to turn the illumination on for 4 seconds.

Button Functions

Digital CH D/A (Digital/Analog)

The D/A button changes the analog and digital channel. Each time you press the D/A button, you can switch back and forth the analog and digital channels. Digital channels have a "D" in front of the channel number.

Note:

- If the cable card is inserted into the TV, you cannot use the D/A button. You can select a digital channel only.

Press the D/A button

To watch digital channels

For example, to move to channel D23:

Press 2 (Two)

Press 3 (Three)

Press the TUNE button

Sub Channel

The main channel sometimes has minor channels (Sub Channels). By using the SUB button, you can select a sub channel easily.

For example, to move to sub channel 123-45:

Press 1, 2 and 3 in order

Press the SUB button

Press 4 and 5 in order

Press the TUNE button

Note:

- If there are more than 2 major channels, select the digital channel by using the ▲▼ buttons and then press the OK button.

Guide

You can view the program from the GUIDE.

Notes:

- The GUIDE function will only work when you are receiving digital programming only.
- The GUIDE will not show the correct time and date if you have not performed the set clock function on your television. See page 63.

Button Functions

i.LINK Menu

i.LINK has two menus - Controller and Device.

By connecting a D-VHS VCR with an i.LINK cable, you can set the timer easily.

Notes:

- The i.LINK/Timer function will only work when you are receiving digital programming only.
- As for the connection of a D-VHS VCR with the i.LINK cable, see page 24.
- When operating the i.LINK, don't insert or disconnect the i.LINK cable.

Controller

You can operate a D-VHS VCR connected with an i.LINK cable by using this controller.

Notes:

- If the i.LINK is not connected, the Controller OSD will not appear. The OSD of device on page 80 will appear.
- Some controller operations may differ from your D-VHS VCR operations.

Press the i.LINK MENU button

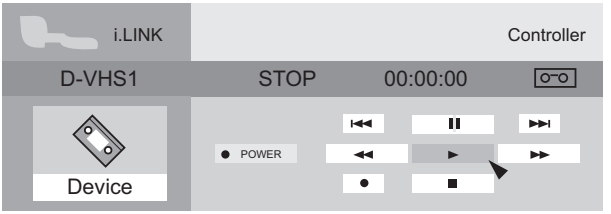

◀▶▲▼ To select the key you want to operate

Press the OK button

Button Functions

Device

To operate, select a device.

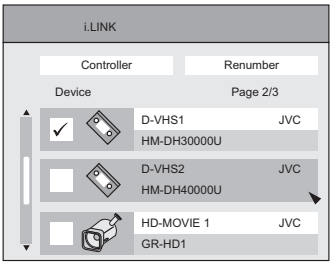

▲▼ To select your device connecting with i.LINK

Press the OK button

Notes:

- If you do not select the device, you cannot use the i.LINK timer functions.
- When one device is selected and you select controller, you will move to the Controller onscreen.
- The devices listed on the device onscreen are only D-VHS and HD-MOVIE that have i.LINK, which can be recognized on this television. However, you can not record programs to HD-MOVIE.
- If you disconnect one device, it will be removed from the list. Then, select Renumber to rearrange the list in the new order.

Timer

You can set the two timers: Record and view. The timer starts the recording or turns to the channel you set for it automatically.

Reservation

Press the TIMER button

▲▼ To New Reservation

Press the OK button

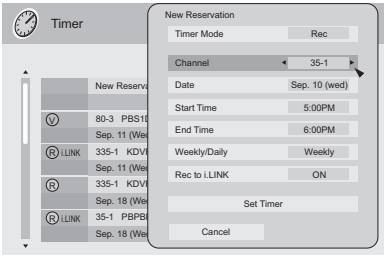

▼ To Timer Mode

◀▶ To select Rec or View

▼ To Channel

◀▶ To select the channel you want to set the timer for

▼ To Date

◀▶ To select the date

▼ To Start Time

◀▶ To set the start time

▼ To End Time

◀▶ To set end time

▼ To Weekly/Daily

◀▶ To select Once, Weekly, Daily(Sun.-Sat.), Daily(Mon.-Sat.) or Daily(Mon.-Fri.)

▼ To Rec to i.LINK

◀▶ To select ON or OFF

▼ To Set Timer

Press the OK button

If you set the Rec on timer mode, set recording R *is added in front of the program title.*

If you set the View on timer mode, set viewing V *is added in front of the program title.*

Notes:

- In order for the timer setting to work, you must set the clock on your television. See page 63.
- When you want to edit the timer settings, see Timer Edit on page 82.

Button Functions

Timer Edit

When you want to confirm the timer you set or edited, or delete the timer setting, use this function.

Timer Edition

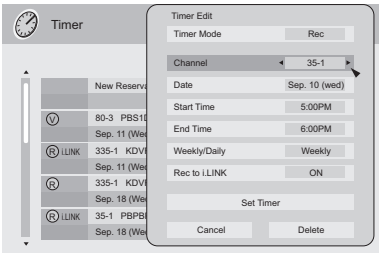

- Press the TIMER button
- ▲▼ To select the timer list you want to edit
- Press the OK button
- ◀▶ ▲▼ To change the setting you want to edit
- ▼ To Set Timer
- Press the OK button

Timer Deletion

- Press the TIMER button
- ▲▼ To select the timer list you want to delete
- Press the OK button
- ▲▼ To Delete
- Press the OK button

Cancel the timer recording

When you record a digital program now, you can cancel the recording.

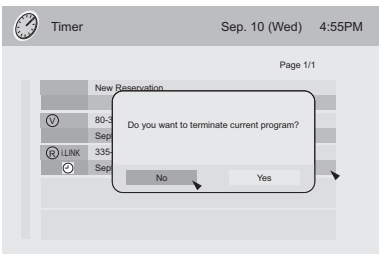

- Press the TIMER button
- ▲▼ To select the timer list you want to cancel the recording
- Press the OK button

  The message "Do you want to terminate current program ?" will appear.
- ◀▶ To select

  YES: Cancel the recording
  NO: Continue the recording
- Press the OK button

OSD Information

Weak Signal

This OSD warning appears when the digital channel that you have selected is too weak to receive or no signal is being detected for that channel.

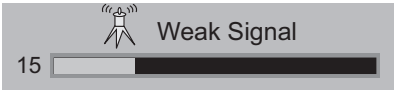

No Program

If the external input terminal you selected, or were watching is not receiving a signal, "NO PROGRAM" appears on the television screen. It appears when that external input terminal is not receiving a signal and you have the Noise Muting function OFF and you have a single screen. It moves automatically every two seconds to prevent the screen from burn-in.

Note:

- Even if "NO PROGRAM" appears on the screen, your timer functions and auto shut off functions that you set, are still active.

Invalid Signal

If you are inputting a PC signal that is invalid, "Invalid Signal" will appear on the TV screen. It appears when the input is PC and it is a single screen.

Note:

- This message only appears for HD-56FH97, HD-61FH97, HD-70FH97, HD-56FN97, HD-61FN97, HD-70FN97.

Cable Card Information

Cable card offers information when a cable card is inserted into the CABLE CARD slot on the back of the TV.

Notes:

- Please contact your local cable company regarding detailed information.
- When the cable card is inserted into the cable card slot, if you turned the power off, the fan will continue to rotate because the program information is being renewed. This is normal.

Cable Card Connection

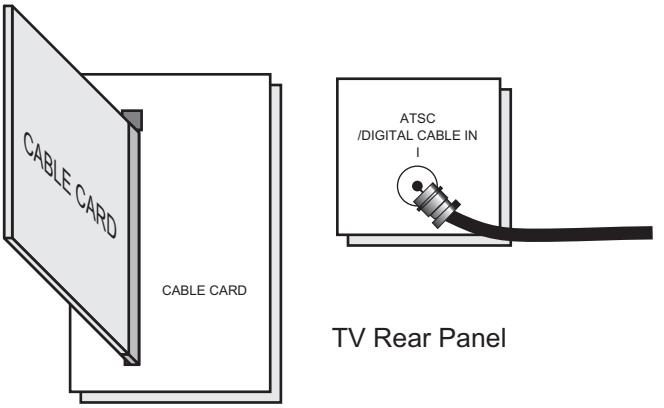

TV Rear Panel

Notes for inserting Cable Card:

- Firmware Upgrade of Cable Card can be executed. While executing the Firmware Upgrade, please do not turn off the TV, according to the message on the TV screen.
- When you are watching a program, and if a weather or government emergency occurs, the following may occur automatically regardless of what channel you were watching: the channel may change, the screen will disappear or important text will appear on the screen. The information is transmitted from EAS (Emergency Alert System). EAS information may also appear when you do not have a cable card inserted.

Lamp Replacement

Changing the Lamp

WARNING!

It is very important that you NEVER TOUCH THE GLASS SURFACE OF THE NEW LAMP. Touching the glass surface will deposit oils from your hand onto the lamp surface. When the lamp heats up to its operating temperature, the oil will cause a difference in temperature on the lamp surface that will likely cause the lamp to break.

Replace the lamp with part number TS-CL110U only! The television is designed to work specifically with this lamp. Using a different lamp, or a third-party manufacturer's lamp could cause a malfunction and or damage to the television.

This television uses a 110-Watt high-pressure mercury lamp to project images onto the television screen. When the lamp nears the end of its operating life, you may notice the picture becoming dark. When the picture begins to darken, or the lamp burns out, it is time to replace the lamp. The following instructions will tell you how to safely replace the lamp.

WARNING!

Under operating conditions, THE LAMP WILL GET EXTREMELY HOT AND WILL CAUSE SEVERE BURNS IF TOUCHED.

Before attempting to replace the lamp, make sure the television has completely run through its cooling cycle. Turn the power off and wait until the LAMP/PROGRAM LED blinks very slowly and turns off completely. Unplug the TV. If you feel any warmth as you place your hand near the lamp, DO NOT TOUCH IT. Wait until the lamp has completely cooled before attempting to replace it. After turning the power off, wait at least 1 hour or more.

NEVER attempt to replace the lamp with the television plugged into a wall outlet. Attempting to replace the lamp with the TV plugged in could lead to a severe electrical shock.

Do not keep the TV on for more than 24 hours consecutively. There is the possibility of the life of the lamp being shortened.

The life of the lamp changes depending on the atmospheric temperature and altitude in which the TV is being used.

Please read these instructions fully before attempting to replace the lamp. If you feel unsure about replacing the lamp yourself, call a service technician.

Lamp Replacement

Replacement Lamp Kit

Before replacing the lamp, you will need to purchase a replacement kit, part number TS-CL110U. To purchase this kit, consult your dealer or call 1-800-252-5722, or go to www.jvc.com.

The replacement kit will include the following:

1 High-Pressure Mercury Lamp

1 Instruction Manual

Because the lamp contains a small amount of mercury, it cannot be disposed of with normal trash.

Lamp Message

LAMP NEEDS TO BE REPLACED.
REFER TO OWNER'S MANUAL FOR REPLACEMENT INSTRUCTIONS.

AFTER REPLACING THE LAMP, PLEASE RESET TIMER IN THE TV MENU.

PRESS OK, IF YOU DO NOT WANT TO SEE THIS MESSAGE AGAIN.

If this message appears when you turn the TV on, you need to replace the lamp. See page 87 on how to replace the lamp.

Note:

- This message will appear every time you turn on the TV when the lamp needs to be replaced. Press the OK button to make the message disappear, or replace the lamp.

Lamp Replacement

How to Replace the Lamp

Please read these instructions fully before attempting to replace the lamp. If you feel unsure about replacing the lamp yourself, call a service technician. Please observe all safety warnings.

1) Turn off the television.
Press the POWER button on the remote control or TV front panel. Wait until the picture has closed and the LAMP LED on the front panel has stopped blinking indicating the lamp cool down is complete.

Warning: The cool-down process cools the lamp from its operating temperature. This does not mean that the lamp will now be cool enough to handle safely. We strongly recommend you wait at least one hour before proceeding.

2) Unplug the television.
Disconnect the power cord from the AC outlet. Make sure that the LAMP LED light has stopped blinking before you unplug the set. Never attempt to replace the lamp with the television plugged in.

3) Remove the lamp cover.
The lamp is located behind the lamp cover below the left side of the television. To access the lamp you will need to remove the lamp cover. First, remove the screw located on the lamp cover using a Philips head type screwdriver (cross-head type). Once the screw has been removed, gently pull the knob towards you and the panel will come away from the television. Set it aside.

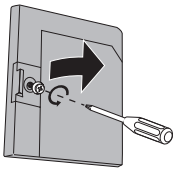

WARNING: DO NOT attempt to remove the assembly until the lamp has fully cooled. If you feel any heat near the lamp, STOP and wait until the lamp has FULLY COOLED.

NEVER attempt to remove the lamp with the television plugged into an outlet.

DO NOT DROP the used lamp. The inside of the lamp is under pressure. Dropping or other hard shock could cause the lamp to shatter.

ALWAYS recycle the used lamp. Because the lamp contains a small amount of mercury, it cannot be thrown away with regular trash. Follow the recycling instructions included with the Lamp Replacement Kit.

Lamp Replacement

4) Remove the lamp unit.
Using a Philips head type screwdriver (cross-head type), loosen the two screws fastening the lamp unit. When the screws have been loosened, remove the lamp by raising the handle and gently sliding the unit straight towards you. Place it carefully in the recycling packaging.

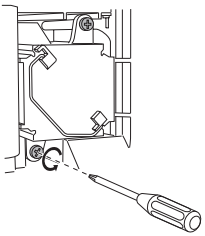

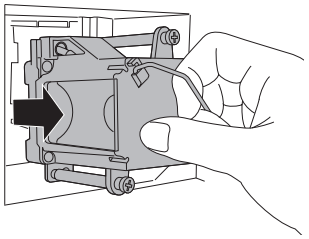

5) Install the new lamp unit.
Holding the handle attached to the new lamp unit, slide and push the new lamp straight into the television and back into the lamp housing area. **Do not forget to re-tighten the two screws.**

Note: If the lamp does not sit securely in the TV (flat in the lamp housing area), it won't turn on. Make sure the lamp sits securely and flat in the housing area.

WARNING!

Remember it is very important that YOU DO NOT TOUCH THE LAMP SURFACE. Please read the warnings on page 85 again.

Also, replace the lamp with part number TS-CL110U only! The television is designed to work specifically with this lamp. Lamps other than TS-CL110U may cause malfunctions and/or other damage to the television.

NOTICE (for USA)

This product has a High Intensity Discharge (HID) lamp that contains a small amount of mercury. It also contains lead in some components. Disposal of these materials may be regulated in your community due to environmental considerations. For disposal or recycling information, please contact your local authorities, or the Electronics Industries Alliance: http://www.eiae.org

To purchase a replacement lamp kit, please call 1-800-252-5722.

6) Re-install the lamp cover.
Insert the lamp cover in the right concave and close the lamp cover. Because the lamp cover has a role to help prevent the danger of an electrical shock, tighten the screw using your fingers.

Note:

- After installing the new lamp unit, do not forget to reset the lamp timer. See page 65.

Lamp Replacement

Warning LED Messages

While the power is on, and there is a problem with the TV, the TV changes to warning mode and informs you of the problem using the LED as follows. Then, the power turns off automatically and performs the cooling for approximately 1 minute.

The LAMP/PROGRAM LED blinks

Condition: It may be a malfunction of the internal electrical circuits.

To correct: Keep the TV off for a while and then turn the power on again. If the TV goes into warning mode, unplug the TV after the cooling has completed and consult your dealer.

The POWER LED and LAMP/PROGRAM LED blink alternately

Condition: The inside temperature rises abnormally or the fan may be blocked.

To correct: Keep the TV off for a while and then turn the power on again. If the TV goes into warning mode, unplug the TV after the cool down as completed and consult your dealer.

The POWER LED and LAMP/PROGRAM LED blink rapidly simultaneously

Condition: The lamp unit has been installed on a slant and is not flat, or it is not fully inserted into the lamp housing. Or it may be a lamp malfunction.

To correct:

- If this condition occurs soon after replacing the lamp: Reinstall the new lamp unit. Repeat the lamp installation steps, taking care to observe all warnings. Make sure the lamp sits FLAT inside the unit when you reinstall it.
- If this condition occurs except for replacing the lamp: Keep the TV off for a while and then turn the power on again. If the TV goes into warning mode, unplug the TV after the cool down as completed and consult your dealer.

Troubleshooting

PROBLEMS	CHECK
There is no power	• See if the power cord became unplugged. • Check for a blown fuse or circuit breaker or a power outage. • It is possible the fan is stuck or the inside temperature is rising abnormally. Consult your dealer.
The POWER LED and LAMP/PROGRAM LED are blinking alternately.	• It may be a malfunction that the fan is locked or the temperature has increased.
The POWER LED and LAMP/PROGRAM LED are blinking rapidly simultaneously.	• The lamp may not have been installed correctly, or it may be due to a malfunction. • The lamp door may not be closed correctly.
There is no picture or sound	• The antenna could be disconnected. • The input mode could be set improperly. See page 68. • The tuner (Auto Tuner Setup) could be set improperly. See page 37. • The TV station may be having difficulties. Check to see if other stations are working. • Use the HDMI cable with HDMI logo HDMI. See page 22. • You can not output audio using the AUDIO OUTPUT under the following conditions: 1) When you have digital sound from an HDMI device connected to the HDMI 1 or HDMI 2 connection on the back of your TV. (See page 22). 2) When you have analog sound from a DVI device connected to the AUDIO IN "HDMI 1" connection. (See page 21). • When you have an HDMI device connected to the HDMI 1 connection on the back of your TV, your TV detects it, and blocks the analog audio signal coming into the "HDMI 1" jacks. Therefore, you can not hear any analog sound from the other device conected to the "HDMI 1" jacks, while you are viewing the images from the HDMI device. (See page 22).
Remote control is not operating properly or at all	• Check to see that the batteries are still working and properly installed. • Make sure the remote has a clear sight path to the TV. • Check that the TV/CATV switch is in the proper position. • You may be too far from the TV. You must be within 23 feet (7 meters).
You cannot select a certain channel	• Make sure the channels have been programmed. See "Channel Summary", page 38. • Check to see if the channel is locked. See "Channel Summary - Lock" page 39.
The power turns off by itself	• Make sure the set did not become unplugged. • Perhaps the On/Off Timer is set. See page 64. • Check to see if the Sleep Timer was set. See page 72.
It does not operate correctly	• This television is operated by a microprocessor. It is possible that external noise or interference is causing the problem. If the television does not function correctly, remove the electrical plug from the wall outlet and wait a while before inserting it into the wall outlet again and operating the television.
The clock is wrong	• The power was interrupted and the clock was not reset. See page 63.
The color quality is poor	• Tint and Color may be improperly adjusted. See page 59. • The Video Status mode may be turned to the wrong setting. See page 71.
There are lines across the picture	• There could be interference from another electrical appliance, such as a computer, another TV or VCR. Move any such appliances further away from the TV.
The picture is spotted	• There could be interference from a high-wattage appliance, like a hairdryer or vacuum, operating nearby. Move the antenna away from the appliance or change to a coaxial cable connection which is less prone to interference.
There are double pictures (ghosts)	• A building or passing airplane can reflect the original signal and produce a second, slightly delayed one. Adjust your antenna position.
Picture is snowy (image noise)	• Your antenna may be damaged, disconnected or turned. Check the antenna connection. If the antenna is damaged, replace it.
Screen is 80% black	• The Closed Caption Text mode is on. Turn it off in the Closed Caption Menu, page 73.
Stereo or bilingual programs can't be heard	• Make sure the MTS settings are correct. See page 72.
The LAMP/PROGRAM LED continues blinking	• It may be a malfunction of the internal electrical circuits.

PROBLEMS	CHECK
There is no sound from the TV's speaker	• The Center CH Input may be turned on. See page 56. • The TV Speaker option may be turned off. See page 54.
Static electricity	• It is normal to feel static electricity if you brush or touch the screen.
You hear occasional crackling sounds	• It is normal for the TV to make crackling sounds when first turned on or off. Unless the sound or picture become abnormal, this is fine.
Voice Enhancement feature is not noticable or less noticable	• The “Smart Sound” feature makes the effect of “Voice Enhancement” less noticable. Please turn “Smart Sound” to “OFF” to hear the full effect of the “Voice Enhancement” feature. See page 70.

The following are not malfunctions.

- The television may make a creaking sound if the temperature of the room or the temperature inside the television changes. If there is no problem with the screen or sound, then there is no need to worry.
- The lamp may make a noise when it blows, but this is not dangerous.
- The lamp may make a noise when the power is turned on and a picture is displayed on the screen. This noise is caused when the mercury inside the lamp is heated, and is not a malfunction.
- The still parts of a picture may remain on the screen. This is a characteristic of HD-ILA elements and not a malfunction. The picture will disappear over time.
- The operation of this television is not guaranteed below 0ºC. If the power is turned on while the temperature is below 0ºC, the picture may be disturbed. Use the television when the temperature is 0ºC or higher.
- Although the HD-ILA element is manufactured with high-precision technology, please understand that some pixels may be lost or permanently displayed.
- There is a cooling fan built-in to the television. Please understand that this fan will make some noise when the television is on and while cooling.
- Although the picture may be temporarily disturbed and noise may be seen on the screen if the power is turned on immediately after it has been turned off. This is not a malfunction.

Specifications

Model	HD-56FH97 HD-56FN97	HD-61FH97 HD-61FN97	HD-70FH97 HD-70FN97
Type	HD-ILA Device Projection		
Reception Format	NTSC, BTSC System (Multi-Channel Sound) ATSC Terrestrial, Digital Cable		
Reception Range	VHF 2 to 13, UHF 14 to 69 at ATSC, CATV 135 Sub, Mid, Super, Hyper and Ultra bands at Digital Cable		
	VHF 2 to 13, UHF 14 to 69 CATV 135 Sub, Mid, Super, Hyper and Ultra bands (191 channel frequency synthesizer system) at Analog • Reception of channel A-5 ("95" of the TV set's on-screen cable channel numbers) is not recommended for your TV set.		
Power Source	AC 120V, 60 Hz		
Power Consumption	215W		
Projection Source	110W High-Pressure Mercury Lamp		
Screen Size	56 inch / 142 cm measured diagonally, 16:9 ratio	61 inch / 155 cm measured diagonally, 16:9 ratio	70 inch / 178 cm measured diagonally, 16:9 ratio
Speakers	(8.5 cm x 12.5 cm) oval x 2		10 cm round X 2
Audio Output	Full Range - 10W + 10W		
Antenna Terminal (VHF/UHF, ATSC/DIGITAL CABLE IN)	75 ohms (VHF/UHF)(F-type connector)		
Input 1, 2, 3, 4 Terminal	S (Input 1, 3) Y: 1 Vp-p positive, 75 ohms (negative sync provided) C: 0.286 Vp-p (burst signal), 75 ohms Video: 1 Vp-p, 75 ohms Audio: 500 mVrms (-4dBs) high impedance		
Input 1, 2 Terminal (component terminal)	1080i / 720p / 480p / 480i Y: 1 Vp-p positive, 75 ohms (negative sync provided) Pb/Pr: 0.7 Vp-p 75 ohms		
DIGITAL-IN (HDMI input terminal)	HDMI Jack x 2 • The HDMI terminal is not compatible with picture signals of a personal computer. Video: 1080p / 1080i / 720p / 480p / 480i / VGA Audio: 2ch PCM, 32 / 44.1 / 48 KHz 16 / 20 / 24 bit		
Monitor/Recording Output	Video: 1Vp-p, 75ohms Y: 1Vp-p positive, 75 ohms (negative sync provided) C: 0.286 Vp-p (burst signal), 75 ohms Audio: 250mVrms (-10dBs) Fs-18dB Low Impedance		
Audio Output Jacks (VARI/FIX)	VARI: More than 0 to 1000mVrms (+2.2dBs) FIX : 500mVrms (-4dBs) Low impedance (1000 Hz when modulated 100%)		
Optical Output Digital Audio	Digital Out (optical) x 1		
i.LINK In/Out Jack	TS IN/OUT (4-pin, S400) x 2 IEEE1394 compliant DTCP digital copy protection compatible		
PC Input Jack	Analog RGB D-SUB (15 pin) x 1, RS-232C (9 pin) x 1* • PC signal is available. Refer to page 26 for details on the signals which can be input.		
Dimensions (inch) W X H X D (cm)	50 7/8 x 37 1/8 x 17 3/4 129.2 x 94.4 x 45	55 1/4 x 40 x 19 140.3 x 101.6 x 48.4	64 1/8 x 46 x 20 1/2 162.6 x 116.8 x 51.9
Weight (lbs / kg)	91 / 41	99 / 45	157 / 71
Accessories	Illuminated remote control unit x 1 / AA batteries X 2 Two-way Splitter x 1 / RF Cable x 2		

Specifications subject to change without notice.

- The open source software is embedded in this product. For more information, please go to: http://software.jvc.com/opensource/lnx/DP/04_AtscCC/download.html

* RS-232C is only for HD-56FH97, HD-61FH97 or HD-70FH97.

Specifications

Model	HD-56FC97	HD-61FC97
Type	HD-ILA Device Projection	
Reception Format	NTSC, BTSC System (Multi-Channel Sound) ATSC Terrestrial, Digital Cable	
Reception Range	VHF 2 to 13, UHF 14 to 69 at ATSC, CATV 135 Sub, Mid, Super, Hyper and Ultra bands at Digital Cable	
	VHF 2 to 13, UHF 14 to 69 CATV 135 Sub, Mid, Super, Hyper and Ultra bands (191 channel frequency synthesizer system) at Analog • Reception of channel A-5 ("95" of the TV set's on-screen cable channel numbers) is not recommended for your TV set.	
Power Source	AC 120V, 60 Hz	
Power Consumption	215W	
Projection Source	110W High-Pressure Mercury Lamp	
Screen Size	56 inch / 142 cm measured diagonally, 16:9 ratio	61 inch / 155 cm measured diagonally, 16:9 ratio
Speakers	10 cm round X 2	
Audio Output	Full Range - 10W + 10W	
Antenna Terminal (VHF/UHF, ATSC/DIGITAL CABLE IN)	75 ohms (VHF/UHF)(F-type connector)	
Input 1, 2, 3, 4 Terminal	S (Input 1, 3) Y: 1 Vp-p positive, 75 ohms (negative sync provided) C: 0.286 Vp-p (burst signal), 75 ohms Video: 1 Vp-p, 75 ohms Audio: 500 mVrms (-4dBs) high impedance	
Input 1, 2 Terminal (component terminal)	1080i / 720p / 480p / 480i Y: 1 Vp-p positive, 75 ohms (negative sync provided) Pb/Pr: 0.7 Vp-p 75 ohms	
DIGITAL-IN (HDMI input terminal)	HDMI Jack x 2 • The HDMI terminal is not compatible with picture signals of a personal computer. Video: 1080p / 1080i / 720p / 480p / 480i / VGA Audio: 2ch PCM, 32 / 44.1 / 48 KHz 16 / 20 / 24 bit	
Monitor/Recording Output	Video: 1Vp-p, 75ohms Y: 1Vp-p positive, 75 ohms (negative sync provided) C: 0.286 Vp-p (burst signal), 75 ohms Audio: 250mVrms (-10dBs) Fs-18dB Low Impedance	
Audio Output Jacks (VARI/FIX)	VARI: More than 0 to 1000mVrms (+2.2dBs) FIX : 500mVrms (-4dBs) Low impedance (1000 Hz when modulated 100%)	
Optical Output Digital Audio	Digital Out (optical) x 1	
i.LINK In/Out Jack	TS IN/OUT (4-pin, S400) x 2 IEEE1394 compliant DTCP digital copy protection compatible	
Dimensions (inch) W X H X D (cm)	52 x 38 1/8 x 17 1/8 131.8 x 96.7 x 43.4	57 3/8 x 41 1/8 x 18 3/8 145.6 x 104.3 x 46.7
Weight (lbs / kg)	95 / 43	104 / 47
Accessories	Illuminated remote control unit x 1 / AA batteries X 2 Two-way Splitter x 1 / RF Cable x 2	

Specifications subject to change without notice.

- The open source software is embedded in this product. For more information, please go to: http://software.jvc.com/opensource/lnx/DP/04_AtscCC/download.html

JVC®

LIMITED WARRANTY

COLOR TV 1-1

For Canadian model televisions, see separate sheets for Canadian Warranty information.

JVC COMPANY OF AMERICA (JVC) warrants this product and all parts thereof, except as set forth below ONLY TO THE ORIGINAL RETAIL PURCHASER to be FREE FROM DEFECTIVE MATERIALS AND WORKMANSHIP from the date of original purchase for the period shown below. ("The Warranty Period")
FOR DIRECT-VIEW COLOR TELEVISION, PICTURE TUBE is covered for Two(2)years.

Parts	Labor
1 YEAR	1 YEAR

THIS LIMITED WARRANTY IS VALID ONLY IN THE FIFTY (50) UNITED STATES, THE DISTRICT OF COLUMBIA AND IN THE COMMONWEALTH OF PUERTO RICO.

WHAT WE WILL DO:

If this product is found to be defective within the warranty period, JVC will repair or replace defective parts with new or rebuilt equivalents at no charge to the original owner. Such repair and replacement services shall be rendered by JVC during normal business hours at JVC authorized service centers. Parts used for replacement are warranted only for the remainder of the Warranty Period. All products may be brought to a JVC authorized service center on a carry-in basis. Color televisions with a screen size of 27" or greater qualify for in-home service. In such cases, a technician will come to your home and either repair the TV there or remove and return it if it cannot be repaired in your home.

WHAT YOU MUST DO FOR WARRANTY SERVICE:

Please do not return your product to the retailer

Instead, return your product to the JVC authorized service center nearest you. If shipping the product to the service center, please be sure to package it carefully, preferably in the original packaging, and include a brief description of the problem(s). Please call 1-800-252-5722 to locate the nearest JVC authorized service center. Service locations can also be obtained from our website http://www.jvc.com. If your product qualifies for in-home service, the service representative will require clear access to the product.

If you have any questions concerning your JVC Product, please contact our Customer Care Center at 800-252-5722

WHAT IS NOT COVERED:

This limited warranty provided by JVC does not cover:

1. Products which have been subject to abuse, accident, alteration, modification, tampering, negligence, misuse, faulty installation, lack of reasonable care, or if repaired or serviced by anyone other than a service facility authorized by JVC to render such service, or if affixed to any attachment not provided with the products, or if the model or serial number has been altered, tampered with, defaced or removed;
2. Initial installation, installation and removal from cabinets or mounting systems.
3. Operational adjustments covered in the Owner's Manual, normal maintenance, video and audio head cleaning;
4. Damage that occurs in shipment, due to act of God, and cosmetic damage;
5. Signal reception problems and failures due to line power surge;
6. Video Pick-up Tubes/CCD Image Sensors are covered for 90 days from the date of purchase;
7. Accessories;
8. Batteries (except that Rechargeable Batteries are covered for 90 days from the date of purchase);
9. Products used for commercial purposes, including, but not limited to rental.

There are no express warranties except as listed above.

THE DURATION OF ANY IMPLIED WARRANTIES, INCLUDING THE IMPLIED WARRANTY OF MERCHANTABILITY, IS LIMITED TO THE DURATION OF THE EXPRESS WARRANTY HEREIN.

JVC SHALL NOT BE LIABLE FOR ANY LOSS OF USE OF THE PRODUCT, INCONVIENCE, OR ANY OTHER DAMAGES, WHETHER DIRECT, INCIDENTAL OR CONSEQUENTAL (INCLUDING, WITHOUT LIMITATION, DAMAGE TO TAPES, RECORDS OR DISCS) RESULTING FROM THE USE OF THIS PRODUCT, OR ARISING OUT OF ANY BREACH OF THIS WARRANTY. ALL EXPRESS AND IMPLIED WARRANTIES, INCLUDING THE WARRANTIES OF MERCHANTABILITY AND FITNESS FOR PARTICULAR PURPOSE, ARE LIMITED TO THE WARRANTY PERIOD SET FORTH ABOVE.

Some states do not allow the exclusion of incidental or consequential damages or limitations on how long an implied warranty lasts, so these limitations or exclusions may not apply to you. This warranty gives you specific legal rights and you may also have other rights which vary from state to state.

JVC COMPANY OF AMERICA
DIVISION OF JVC AMERICAS CORP.
1700 Valley Road
Wayne, NJ 07470
http://www.jvc.com

REFURBISHED PRODUCTS CARRY A SEPARATE WARRANTY, THIS WARRANTY DOES NOT APPLY. FOR DETAIL OF REFURBISHED PRODUCT WARRANTY, PLEASE REFER TO THE REFURBISHED PRODUCT WARRANTY INFORMATION PACKAGED WITH EACH REFURBISHED PRODUCT.

For customer use:

Enter below the Model No. and Serial No. which is located either on the rear, bottom or side of the cabinet. Retain this information for future reference.

Model No. : _____ Serial No. : _____

Purchase date : _____ Name of dealer : _____

TO OUR VALUED CUSTOMER

THANK YOU FOR PURCHASING THIS JVC PRODUCT.

WE WANT TO HELP YOU ACHIEVE A PERFECT EXPERIENCE.

NEED HELP ON HOW TO HOOK UP?
NEED ASSISTANCE ON HOW TO OPERATE?
NEED TO LOCATE A JVC SERVICE CENTER?
LIKE TO PURCHASE ACCESSORIES?

JVC® IS HERE TO HELP!

TOLL FREE: 1(800)252-5722

http://www.jvc.com

Remember to retain your Bill of Sale for Warranty Service.

Do not attempt to service the product yourself

Caution
To prevent electrical shock, do not open the cabinet.
There are no user serviceable parts inside.
Please refer to qualified service personnel for repairs.

BT-51011-8
(0504)

JVC COMPANY OF AMERICA
Division of JVC Americas Corp.
1700 Valley Road
Wayne, New Jersey, 07470

JVC CANADA, INC.
21 Finchdene Square
Scarborough, Ontario
Canada, M1X 1A7